KINGSTON

TO ORDER PARTS, CALL: 1-877-252-7277
www.kingstonbrass.com

GCKUS362211

Cast Iron Undermount Single Bowl Kitchen Sink

Part #	QTY
1.	1
2.	2
3.	12
4.	12
5.	12
6.	4
7.	16

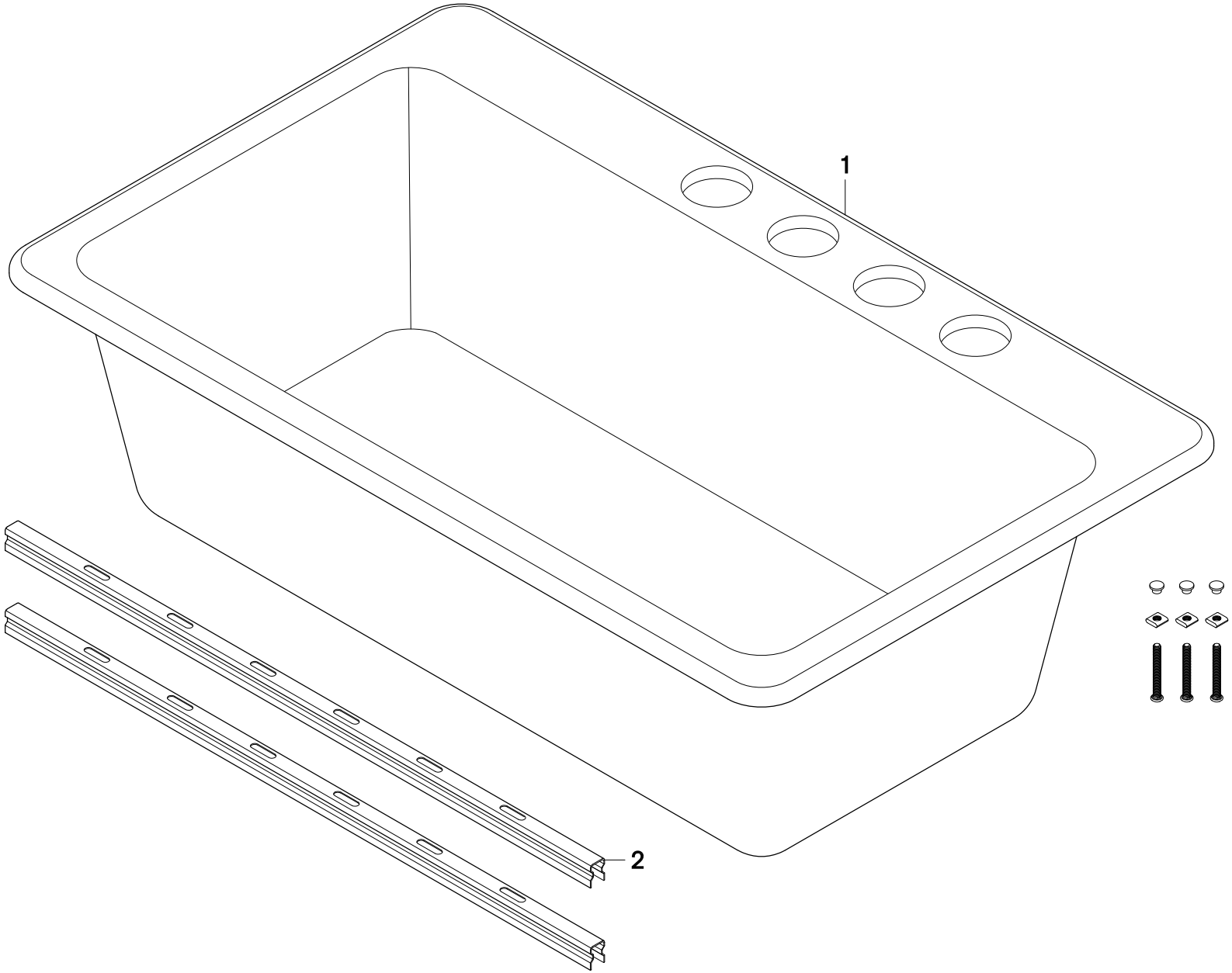

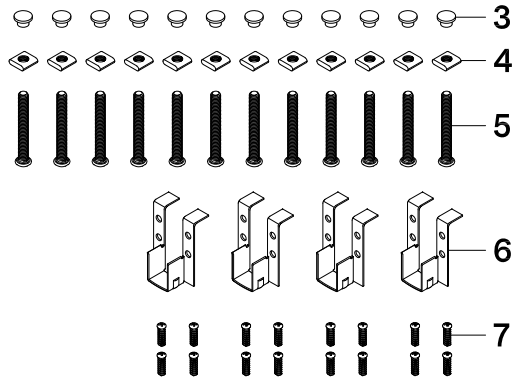

2025-08-A