KINGSTON

TO ORDER PARTS, CALL: 1-877-252-7277
www.kingstonbrass.com

CCK225MB,C,PB,AB,ORB,PN,SB,SN

Tub Wall Mount Tub Filler with Hand Shower

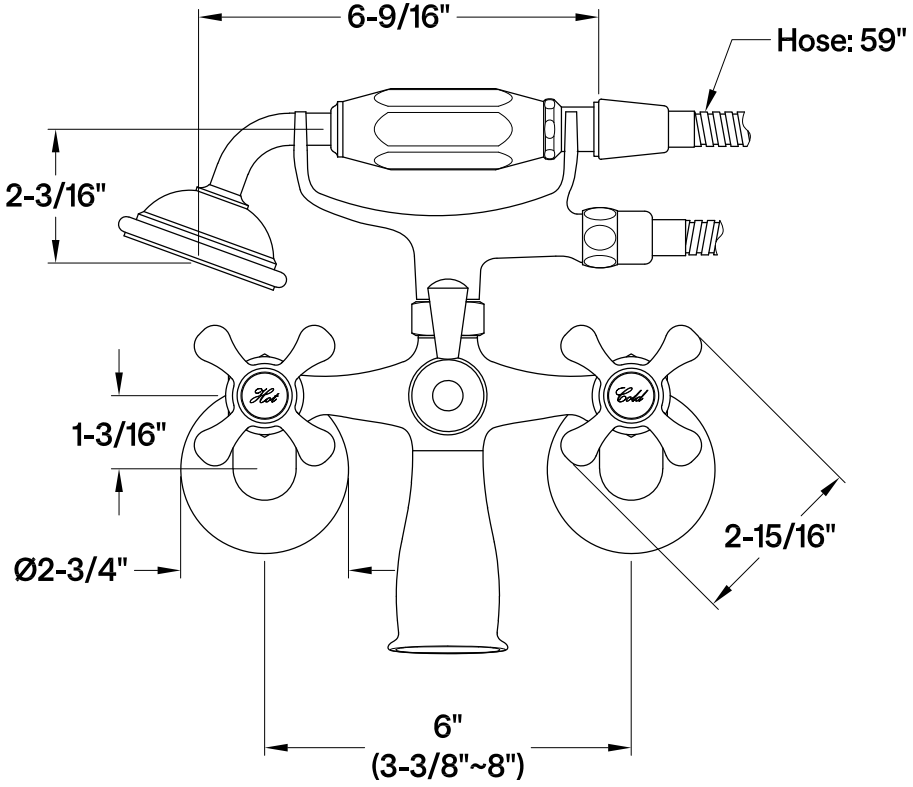

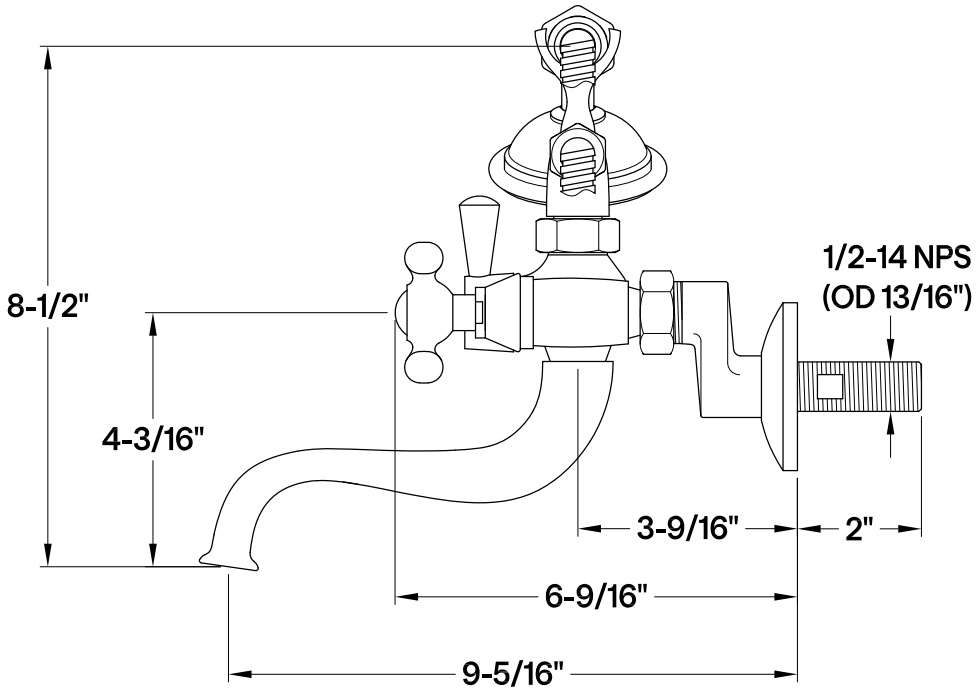

KINGSTON

TO ORDER PARTS, CALL: 1-877-252-7277
www.kingstonbrass.com

CCK225MB,C,PB,AB,ORB,PN,SB,SN

Single Offset Bath Supply

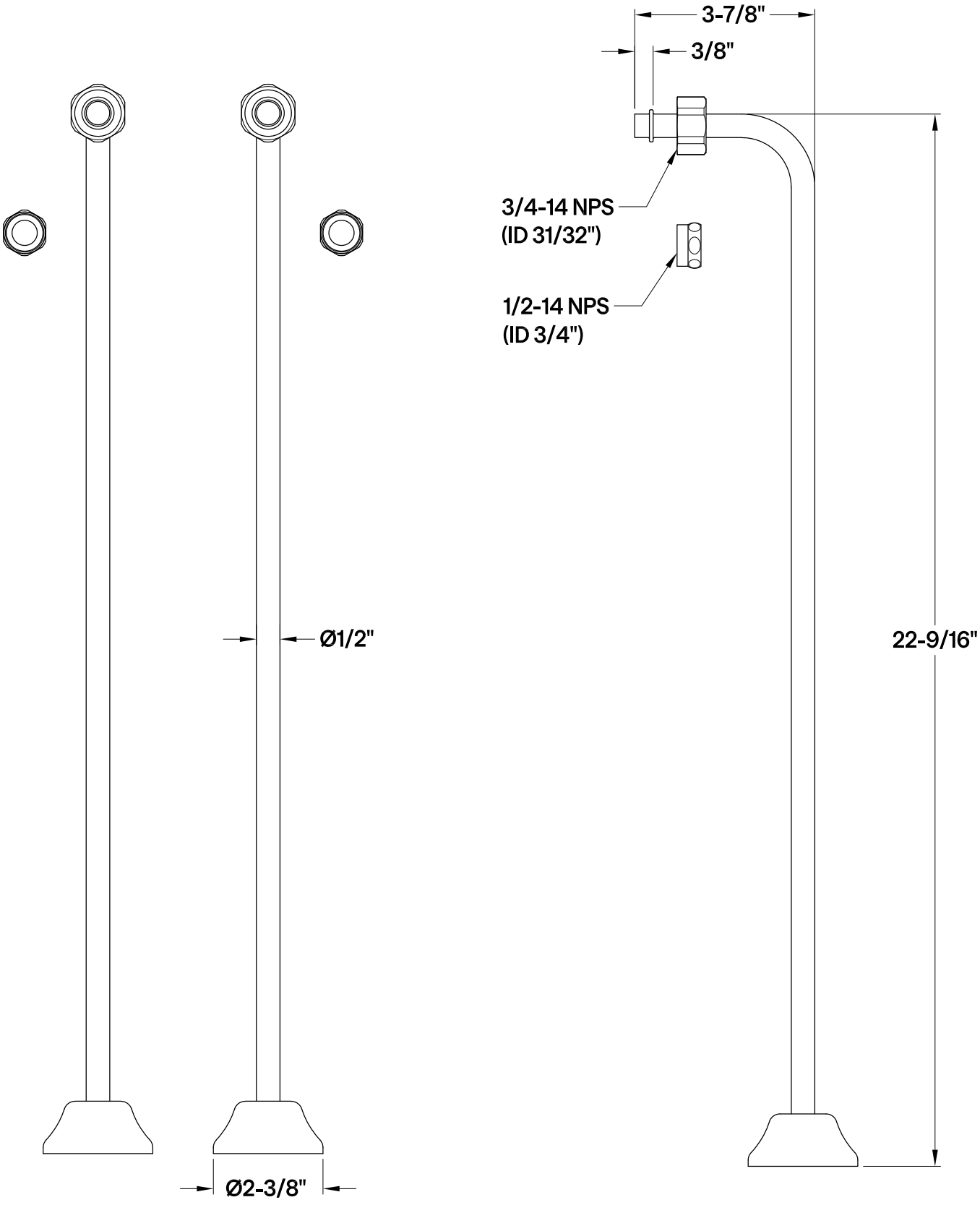

CCK225MB,C,PB,AB,ORB,PN,SB,SN

Quarter Turn Valves, 1/2" FIP x 1/2" or 7/16" OD Slip-Joint

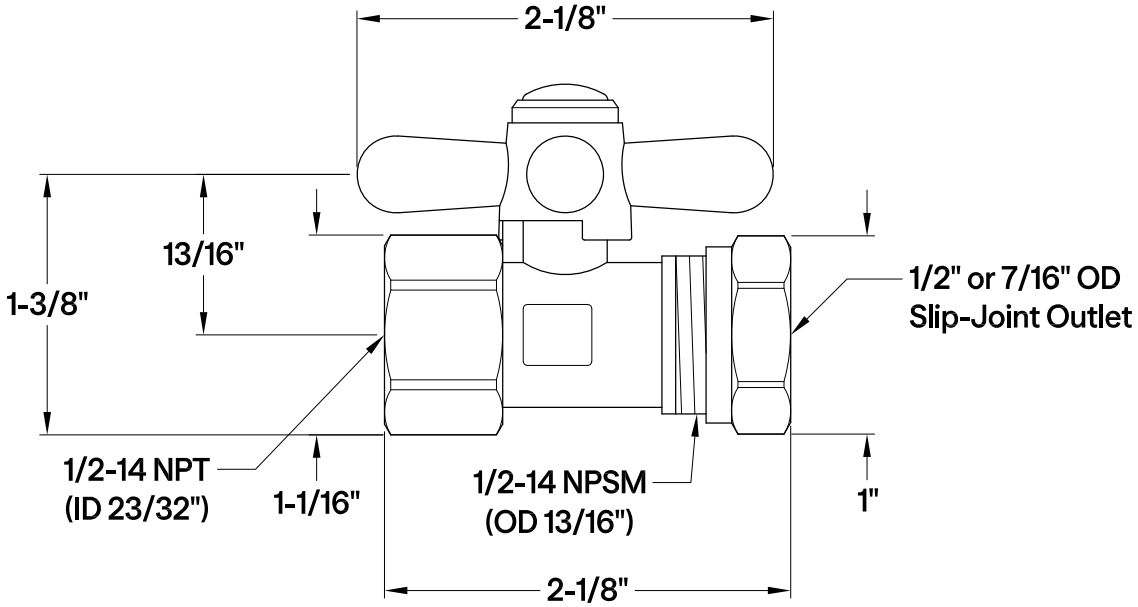

KINGSTON

TO ORDER PARTS, CALL: 1-877-252-7277
www.kingstonbrass.com

CCK225MB,C,PB,AB,ORB,PN,SB,SN

Clawfoot Tub Waste & Overflow Drain, 20 Gauge

