ALORA 2 DRAWER BEDSIDE TABLE ASSEMBLY INSTRUCTIONS

Thank you for purchasing the ALORA 2 DRAWER BEDSIDE TABLE.
Please read the instructions carefully to ensure safe operation of the product.

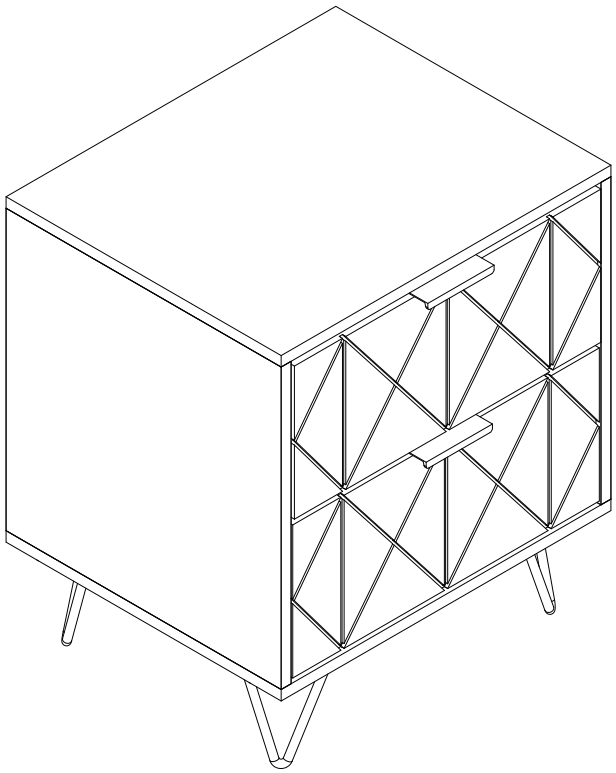

Size:L40x40xH46.5cm

PLEASE READ this sheet prior to assembly to familiarise yourself with the various stages of construction.

Carefully open the pack supplied and check the contents against the parts and fittings check list. Do not destroy any of the packaging until you are certain that you have all the necessary parts for the assembly.

CAUTION: There are small components used in the construction of this unit. These loose items should be kept away from young children whilst assembling your unit to avoid the danger of choking hazards.

Tools Required

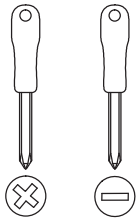

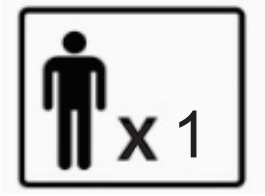



IMPORTANT - READ CAREFULLY - RETAIN THESE INSTRUCTIONS FOR FUTURE REFERENCE.

INFORMATION

Due to the size of this product we recommend that it is assembled in the room intended for use.
When you are ready to start, make sure that you have the right tools, plenty of space and a clean, dry area for assembly.
Unwrap all packaging materials and place the components on top of the carton box or on a clean floor to prevent it from scratching.
Check the pack and make sure you have all the parts listed.
Ensure that this product is fully assembled as illustrated before use.
Check all screws or bolts are tightened and inspect regularly
This product should only be used on firm, level ground.
Keep small parts out of reach of children.
Make sure the legs remain in contact with the ground.
Tools not included.

WARNINGS

DO NOT use power tools to construct this product.
DO NOT use this product if parts are missing, damaged or worn.
DO NOT stand on the product.
DO NOT place very hot or very cold items on the surface unless adequately thick tablemats are used to prevent such items damaging your table top

CARE INFORMATION

Never use scourers, abrasives or chemical cleaners.
To clean wipe with a sponge and warm soapy water. Do not use solvent based cleaners or detergents as they can bleach or damage the product.

ALORA 2 DRAWER BEDSIDE TABLE ASSEMBLY INSTRUCTIONS

PART LIST

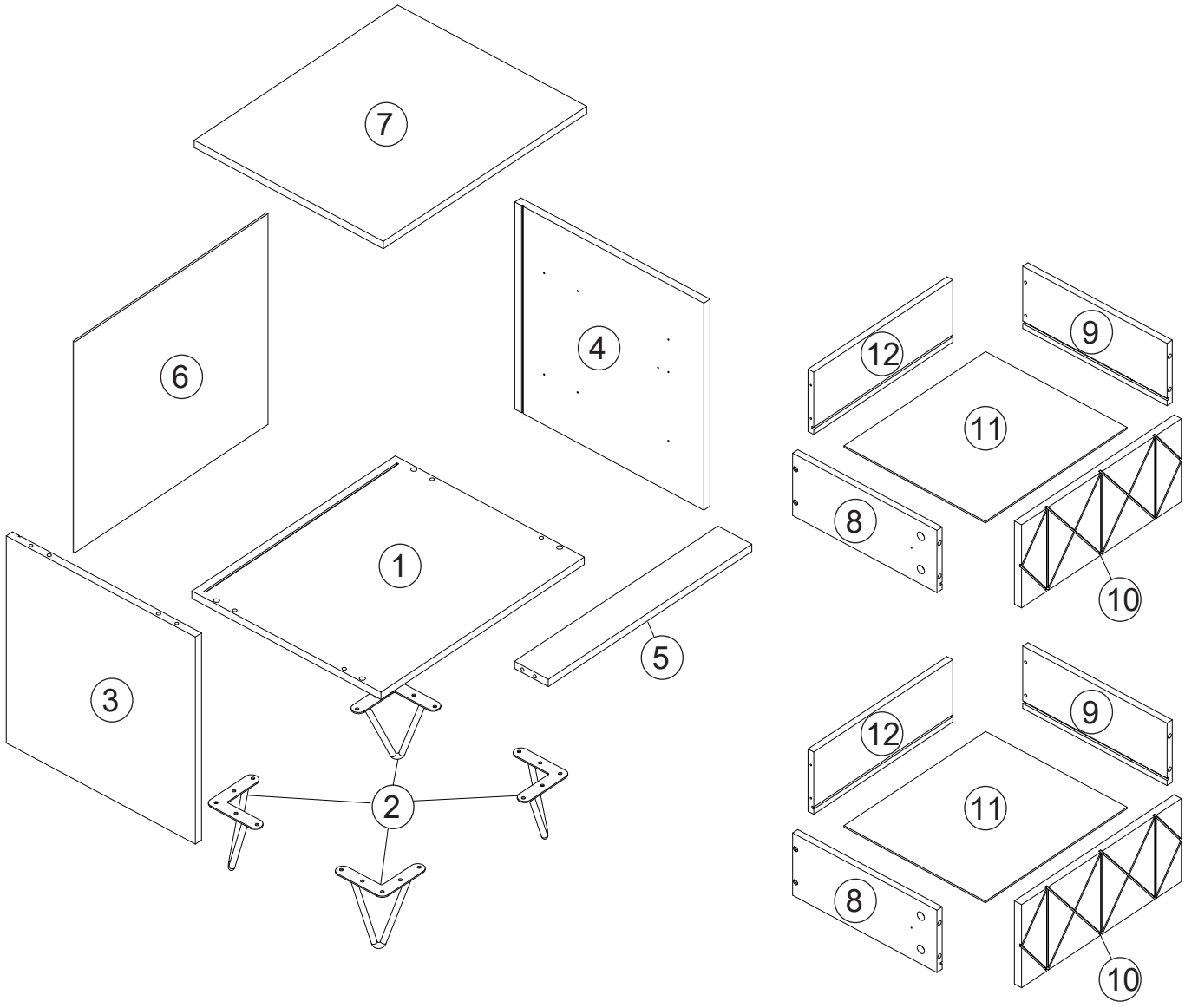

ALORA 2 DRAWER BEDSIDE TABLE ASSEMBLY INSTRUCTIONS

HARDWARE LIST

Ax20  Screw M3x14mm	Bx24  Screw M3.5x12mm	Cx8 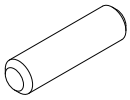 Wood dowel M6x30mm	Dx4 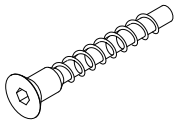 Screw M7x50mm
Ex16 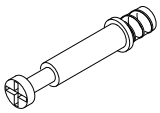 Cam bolt M6x35mm	Fx16  Cam M15x9.5mm	Gx2 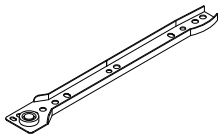 Drawer silder	Hx2 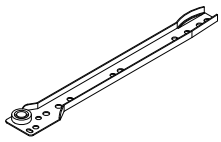 Drawer silder
Jx2 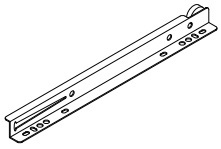 Drawer silder	Kx2 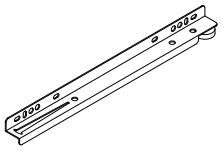 Drawer silder	Lx8 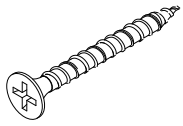 Screw M4x30mm	Mx2 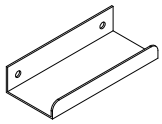 Handle
Nx8  M3x12mm	Px4  Back clip	Qx1  Allen key	

ALORA 2 DRAWER BEDSIDE TABLE ASSEMBLY INSTRUCTIONS

PART LIST

① x1 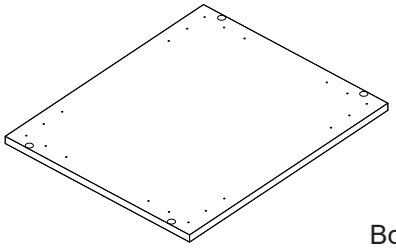 Bottom panel	② x4 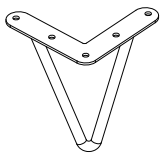 Leg
③ x1 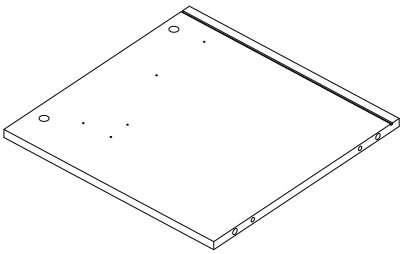 LH side panel	④ x1 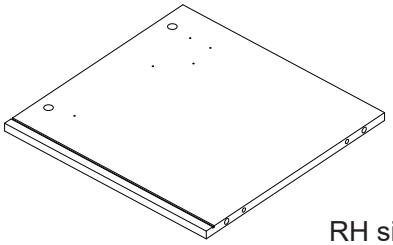 RH side panel
⑤ x1 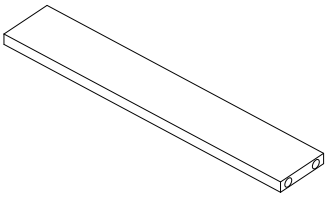 Support bar	⑥ x1 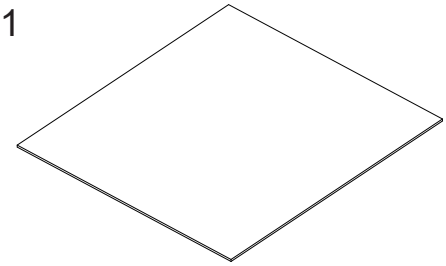 Back panel
⑦ x1 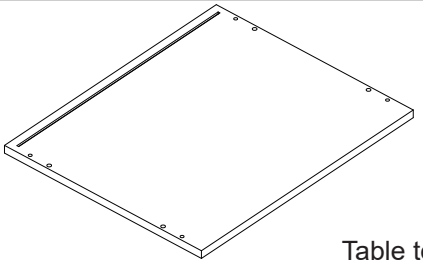 Table top panel	⑧ x2 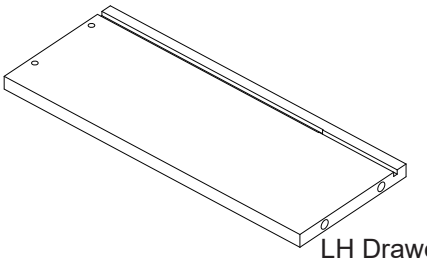 LH Drawer side
⑨ x2 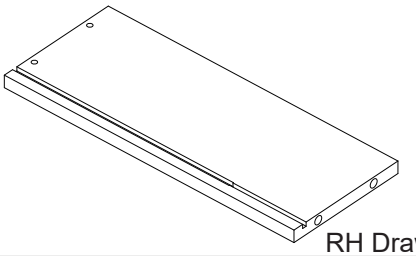 RH Drawer side	⑩ x2 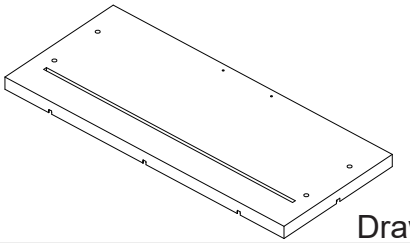 Drawer front
⑪ x2 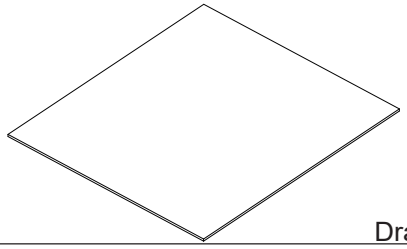 Drawer bottom	⑫ x2 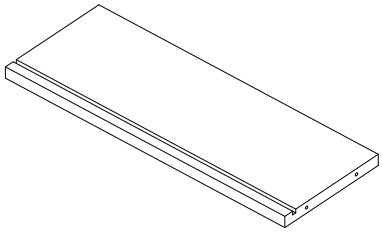 Drawer back

Instruction For Fastening CAM-BOLT AND CAM-LOCK

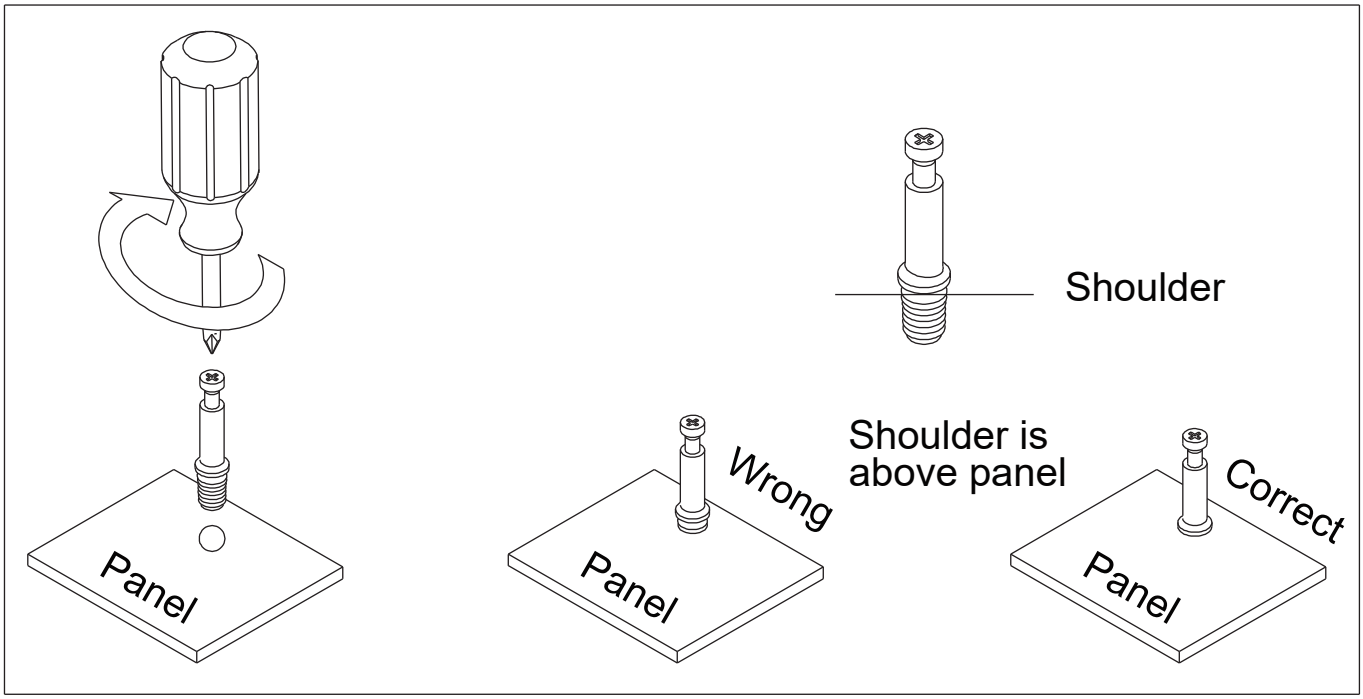

Attach the Cam-bolt to the specific pre-drilled holes on the panel. Use a Phillips Screwdriver to tighten Cam-bolt vertically until shoulder is flush (on the same level) with panel. Do not over-tighten or under-tighten.

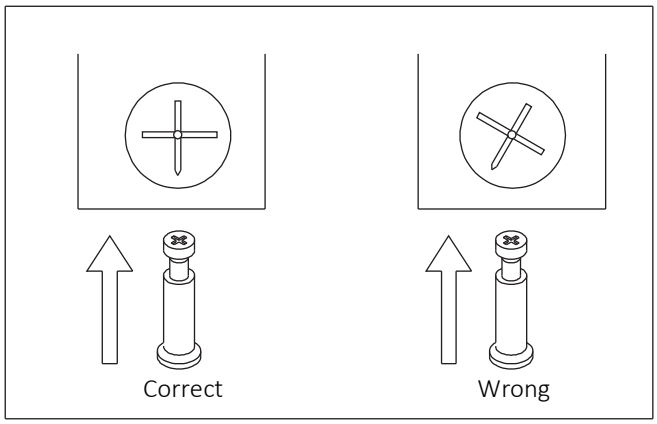

Align the arrow of the Cam-lock to the Cam-bolt head and insert the Cam-lock.

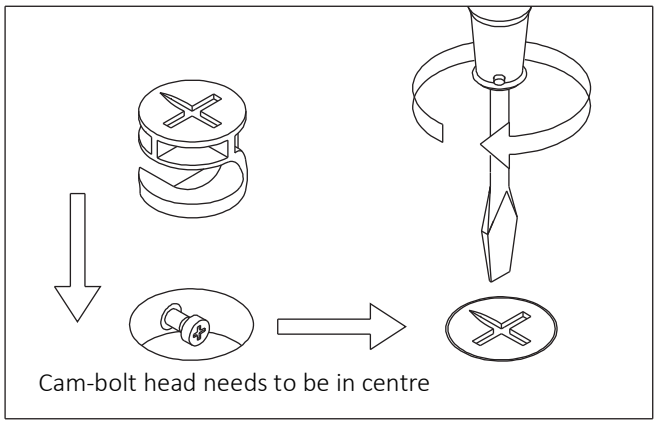

Use a Flat Screwdriver or Phillips Screwdriver to turn the Cam-lock clockwise one half a turn so it locks onto the head of the Cam-lock. Turn only until it is snug. Over-tightening could damage Cam-lock or/and Cam-bolt.

ALORA 2 DRAWER BEDSIDE TABLE ASSEMBLY INSTRUCTIONS

STEP 1

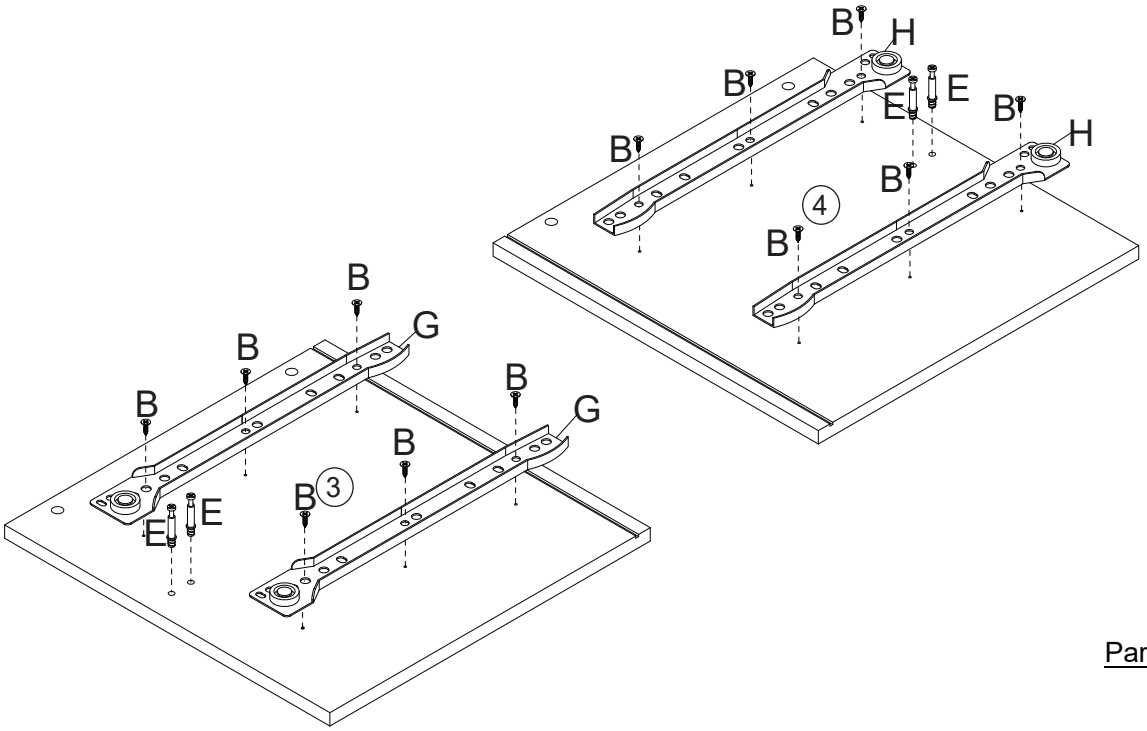

Parts required

③x1
④x1
Bx12
Ex4
Gx2
Hx2

STEP 2

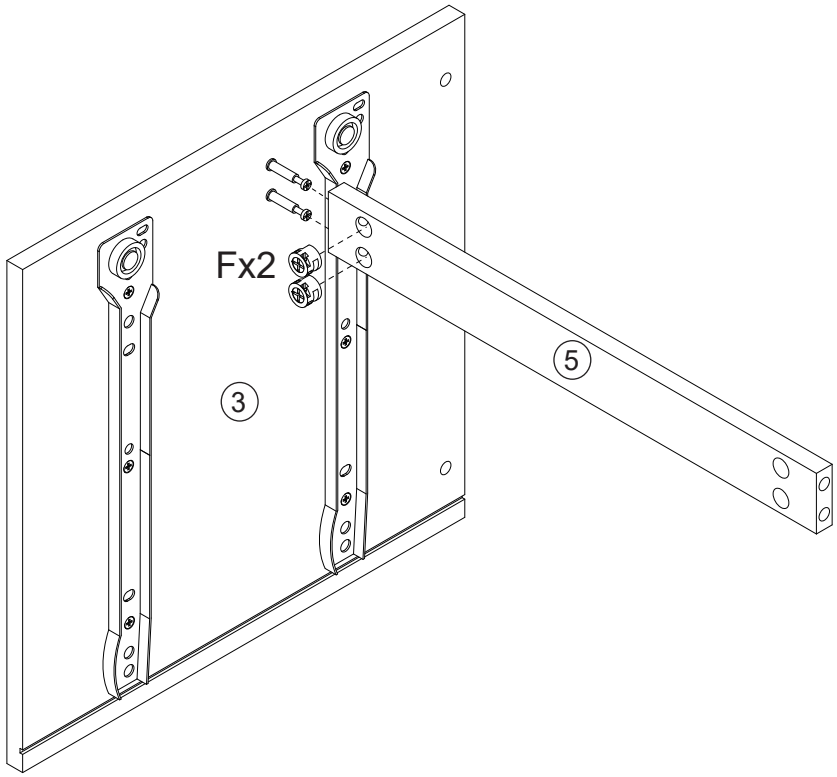

Parts required

③x1
⑤x1
Fx2

ALORA 2 DRAWER BEDSIDE TABLE ASSEMBLY INSTRUCTIONS

STEP 3

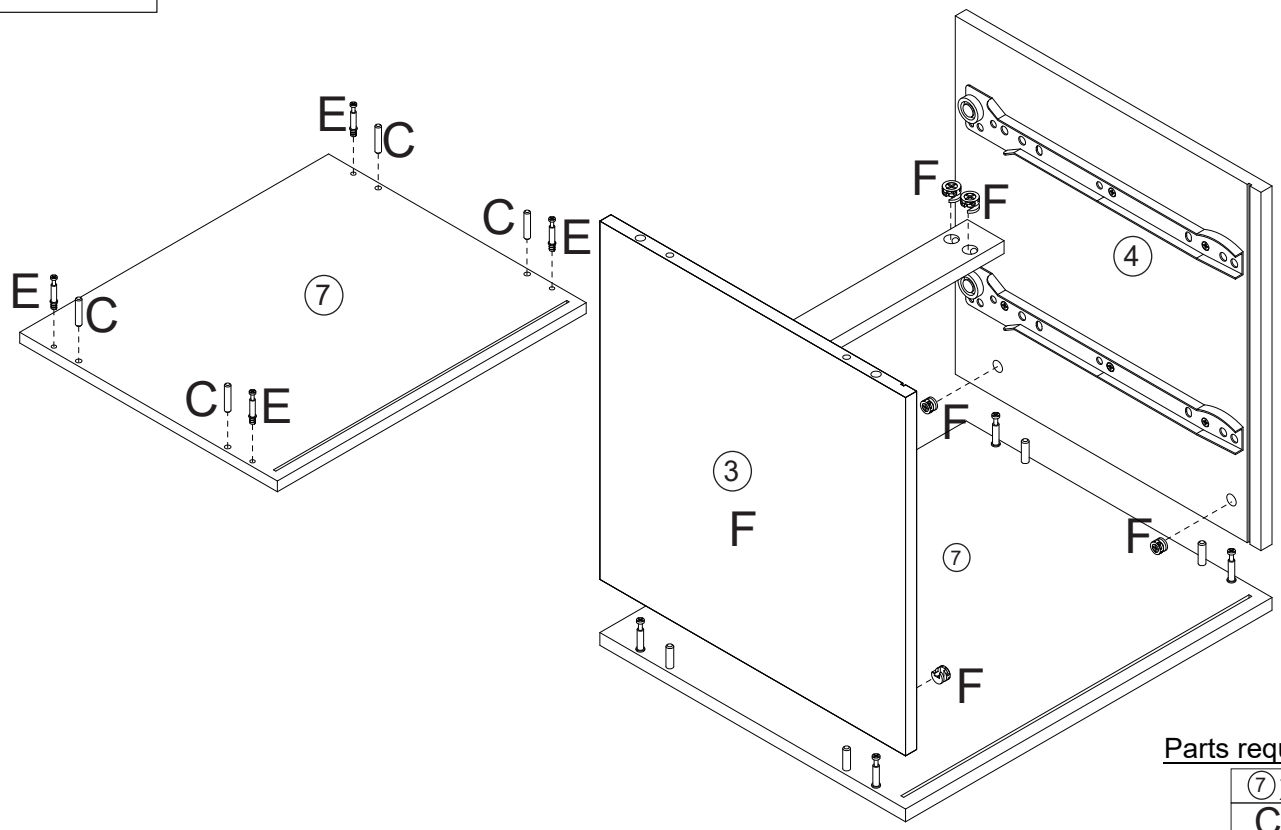

Parts required

⑦x1
Cx4
Ex4
Fx6

STEP 4

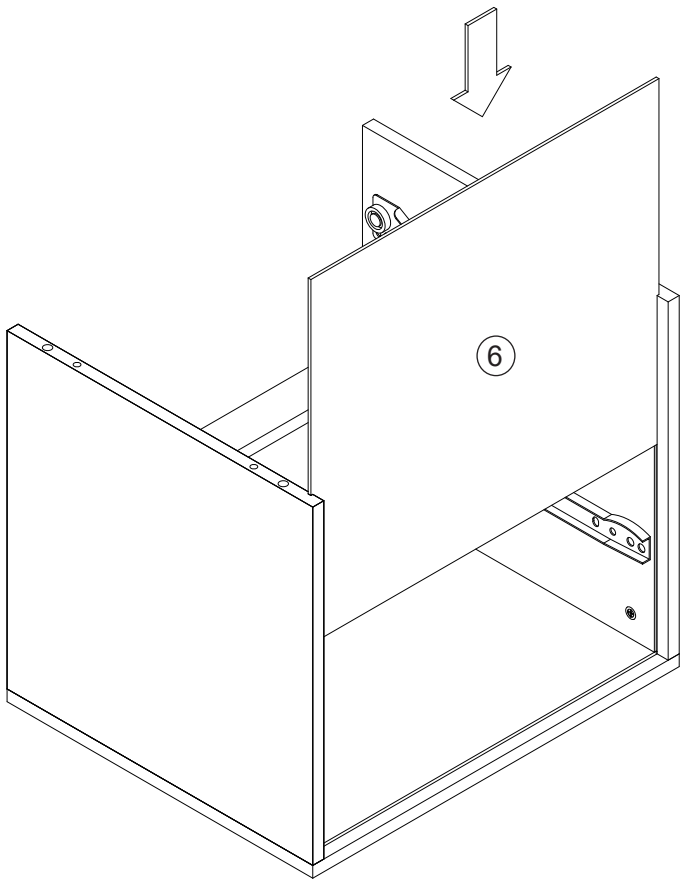

Parts required

⑥x1

STEP 5

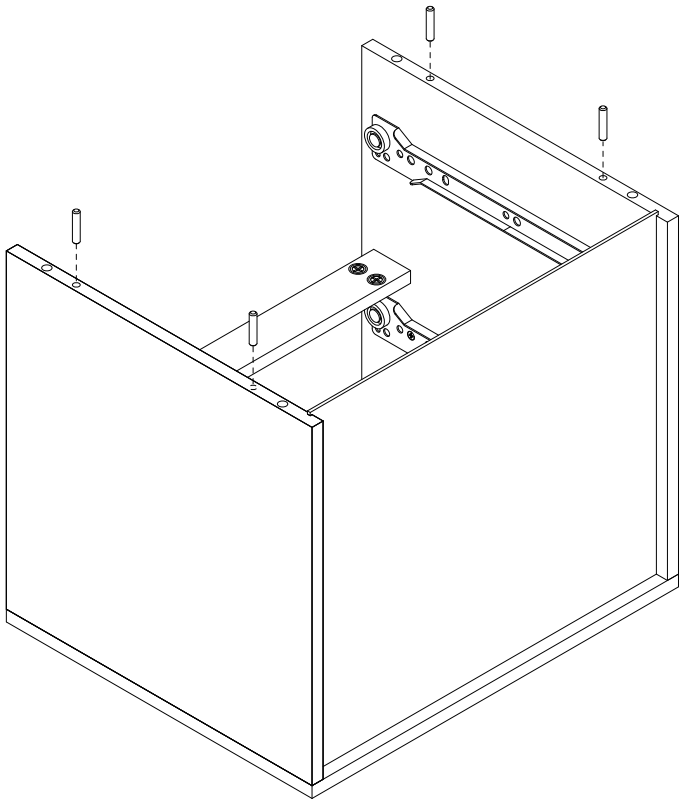

Parts required

Cx4

STEP 6

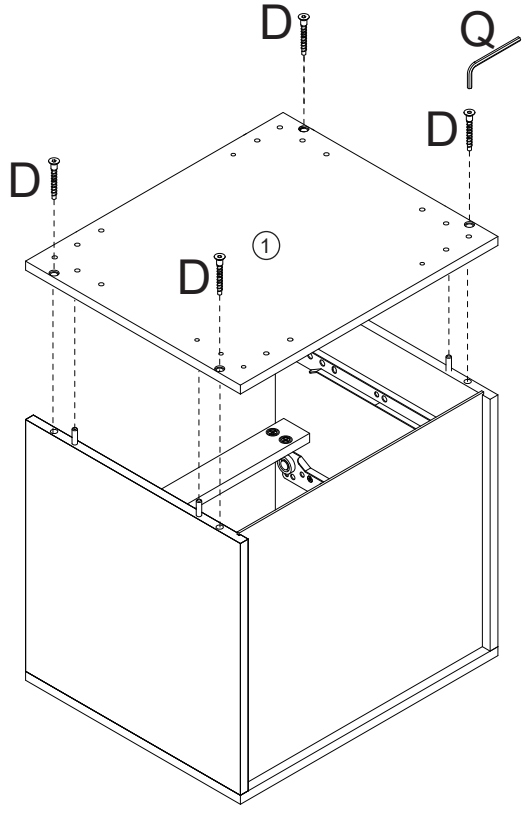

Parts required

①x1
Dx4
Qx1

STEP 7

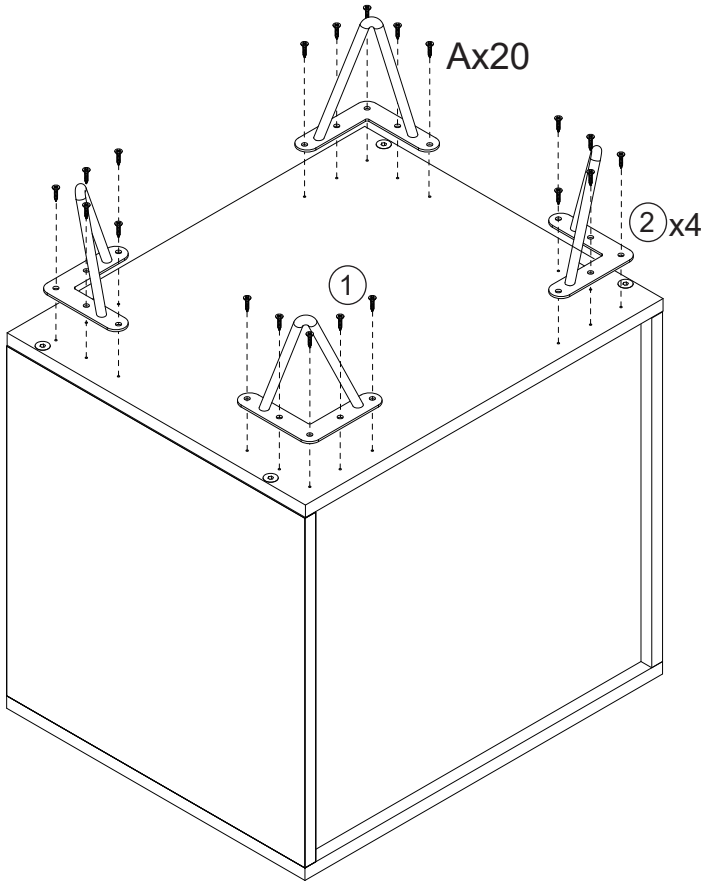

Parts required

1 x1
2 x4
Ax20

STEP 8

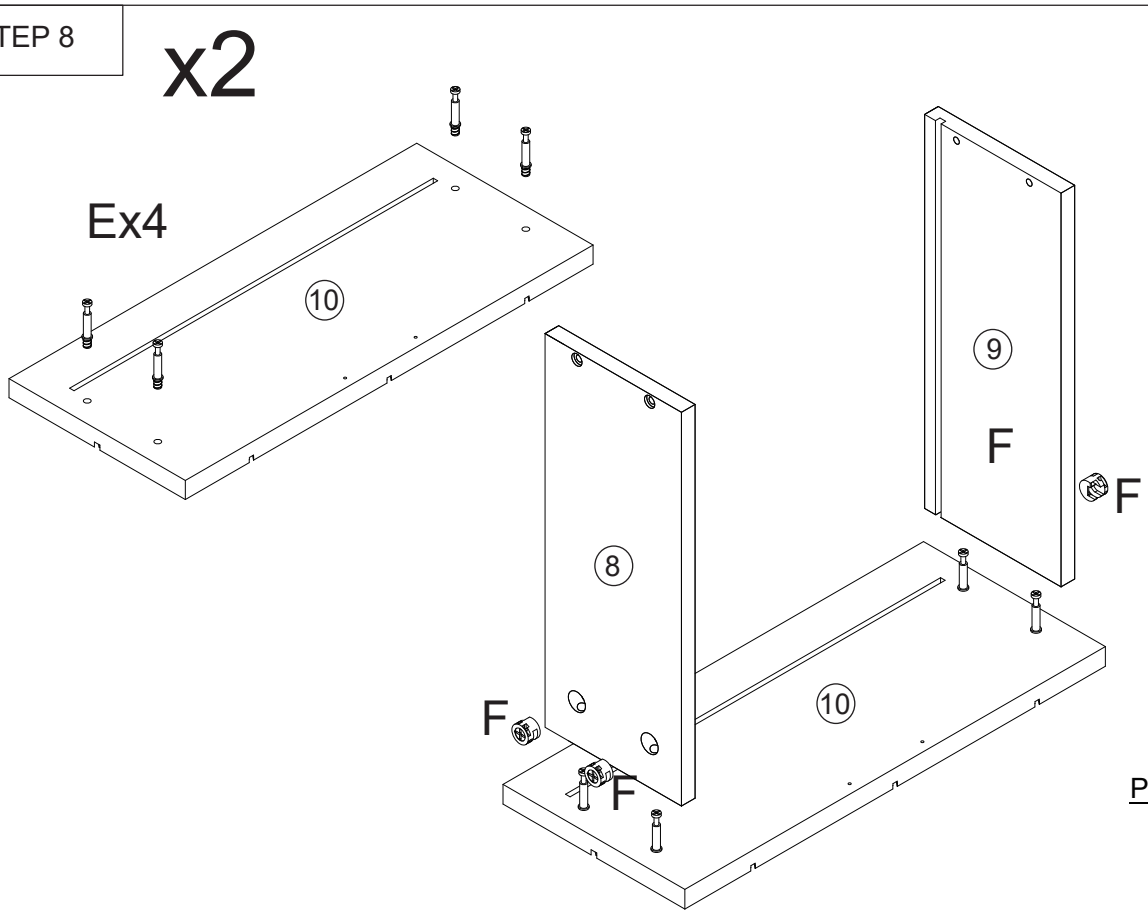

Parts required

8 x2
9 x2
10 x2
Ex8
Fx8

STEP 9

x2

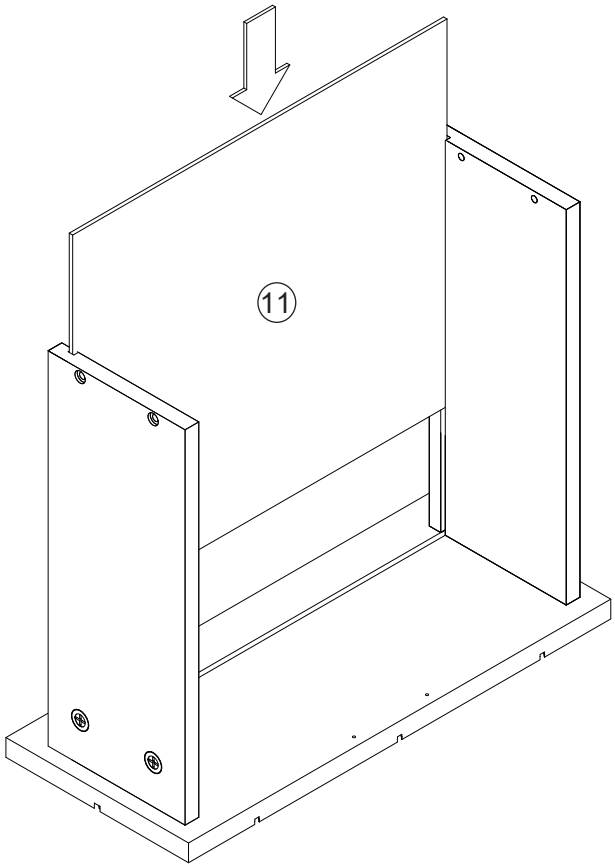

Parts required

⑪x2

STEP 10

x2

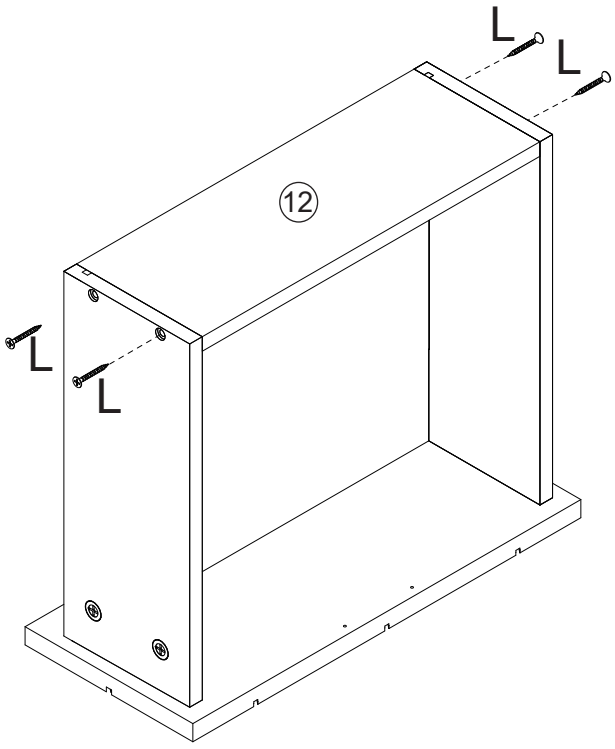

Parts required

⑫x2

Lx8

STEP 11 x2

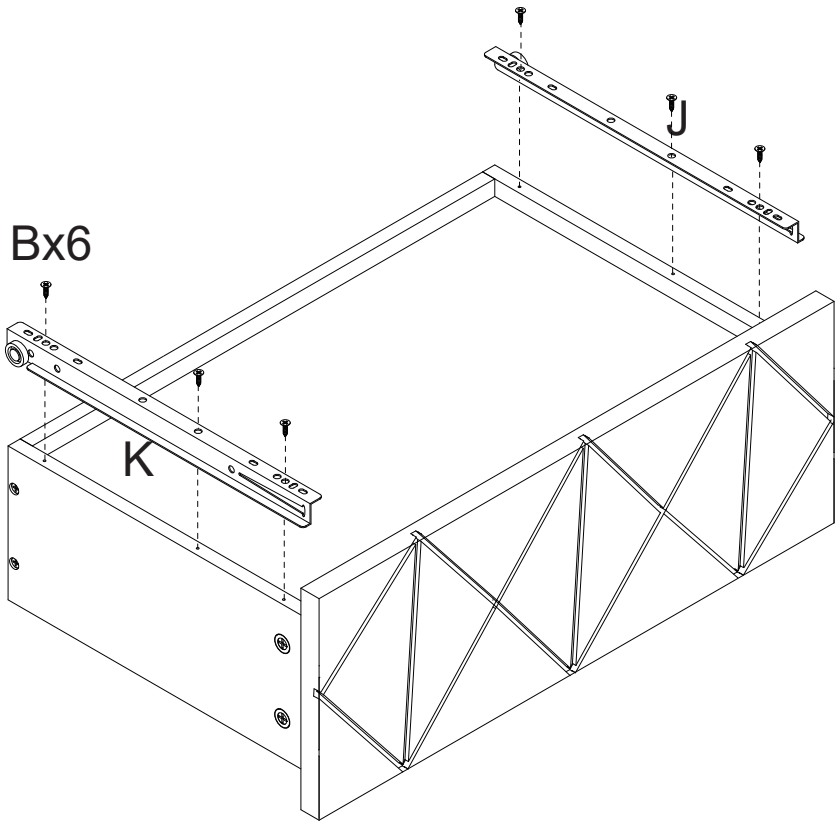

Parts required

⑧x2
⑨x2
Bx12
Jx2
Kx2

STEP 12 x2

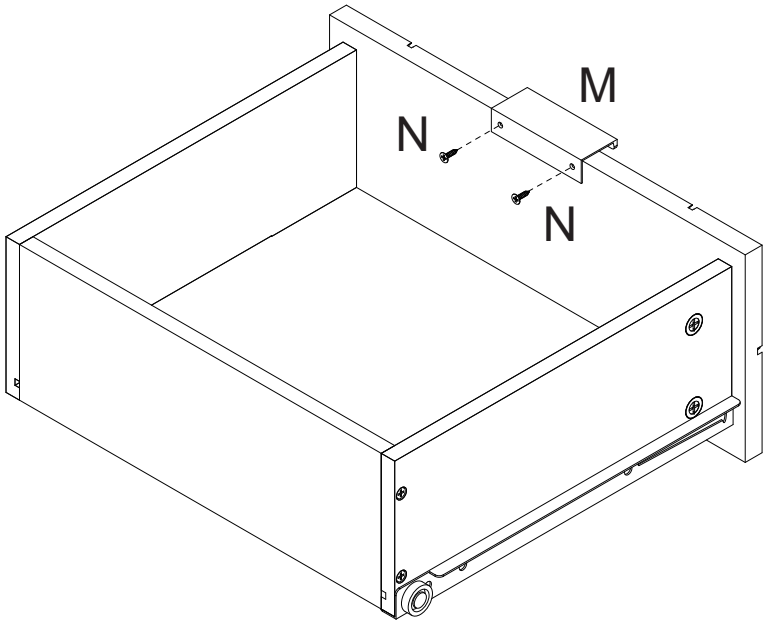

Parts required

Mx2
Nx4

ALORA 2 DRAWER BEDSIDE TABLE ASSEMBLY INSTRUCTIONS

STEP 13

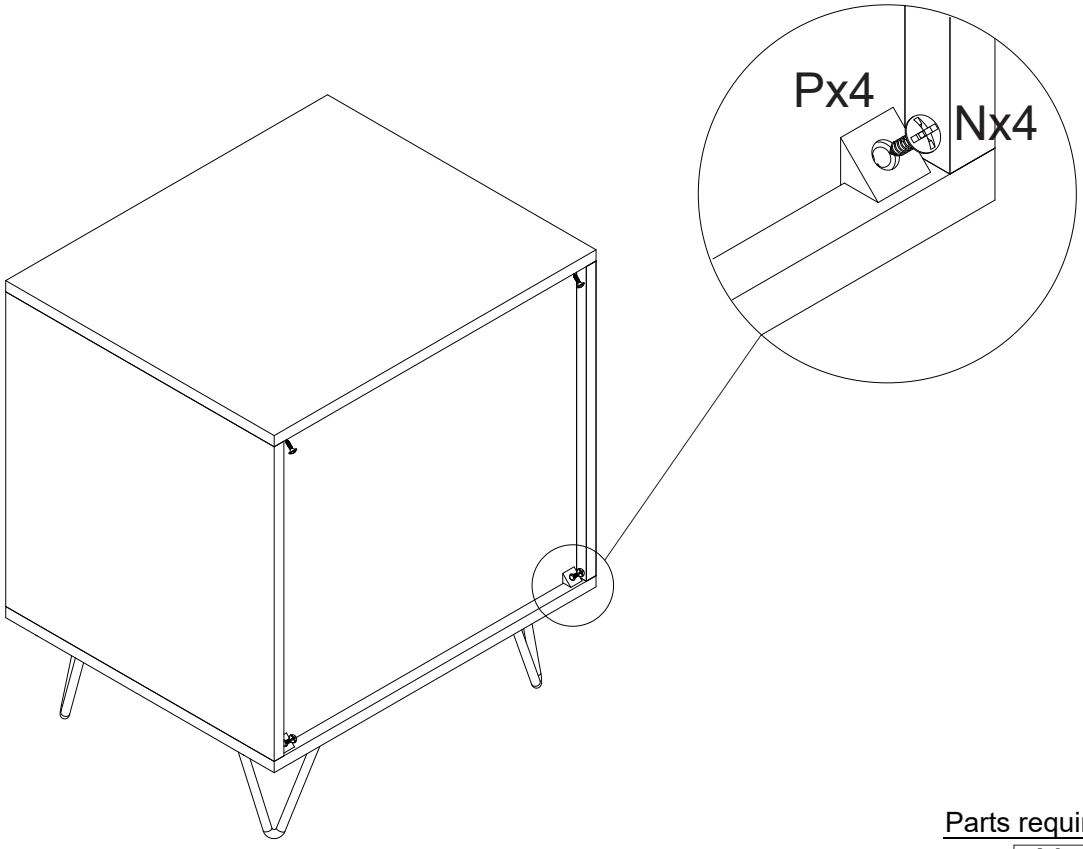

Parts required

Nx4
Px4

STEP 14

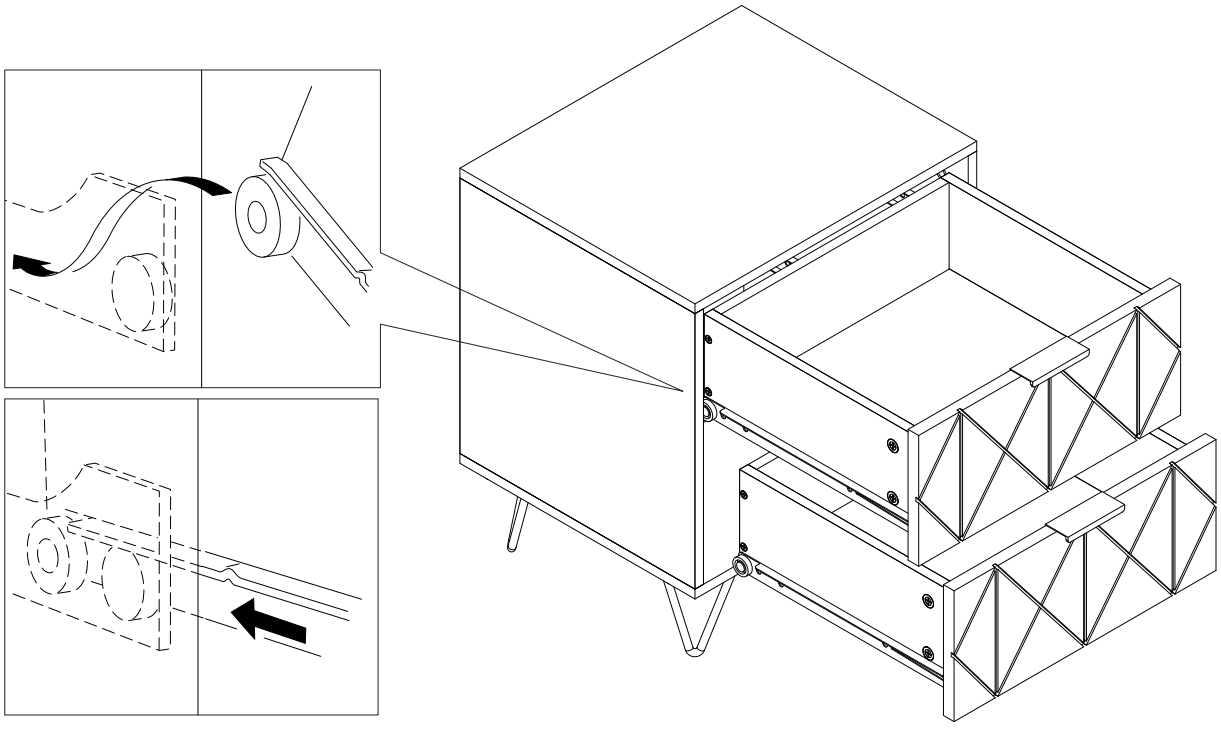

Complete Assembly

Your ALORA 2 DRAWER BEDSIDE TABL is now completely assembled.
Periodically check to ensure that the components are in their proper position and free from damage.

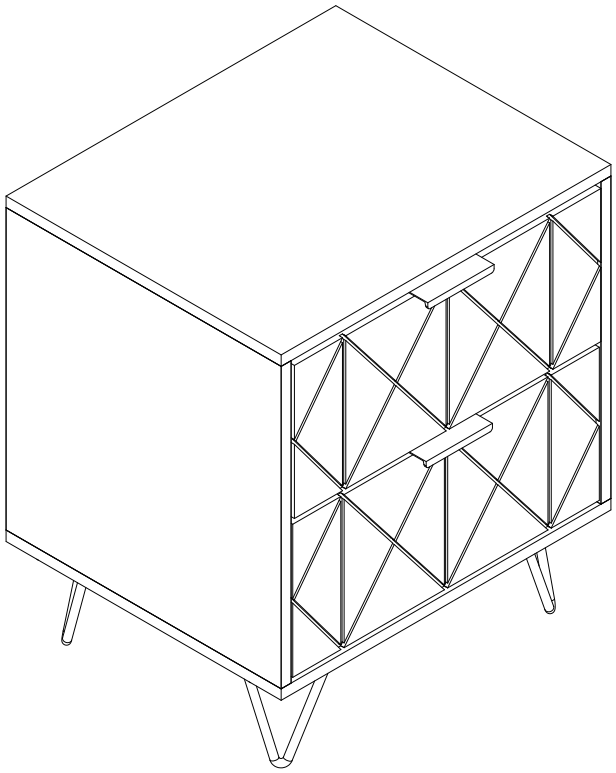

Keep instructions for future reference.

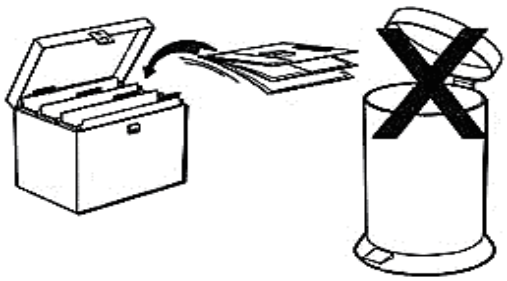

Supplied by : GFW THE FURNITURE WAREHOUSE
Waterside Distribution Centre
Waterside Business Park
Johnson Road Lancashire
BB3 3RT
www.gfwlimited.co.uk

Represented by:
Authorised Rep Compliance Ltd
71 Lower Baggot Street
Dublin
D02 P593
Ireland
www.arccompliance.com