KOHLER®

sok®
Bath Drain
K-7193

Features
- 17-gauge brass construction
- Brass tailpiece
- Adjustable trip lever
- 1-1/2" (38 mm) connection
- For use with the sok® bath

Installation
- Above- or through-the-floor

Recommended Products/Accessories
K-23726 Drain treatment

Codes/Standards
ASME A112.18.2/CSA B125.2

KOHLER® One-Year Limited Warranty
See website for detailed warranty information.

Available Colors/Finishes
Color tiles intended for reference only.

Color	Code	Description
	CP	Polished Chrome
	BN	Vibrant® Brushed Nickel

KOHLER®

sok®
Bath Drain
K-7193

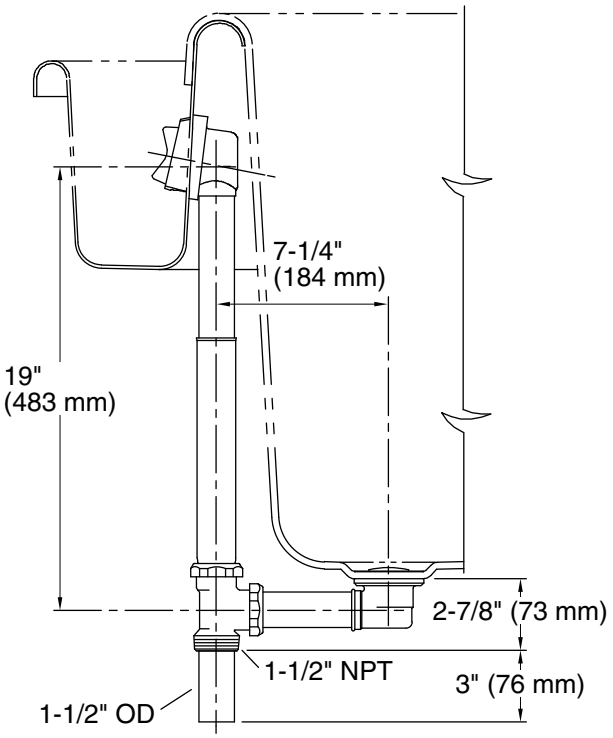

Through-the-Floor

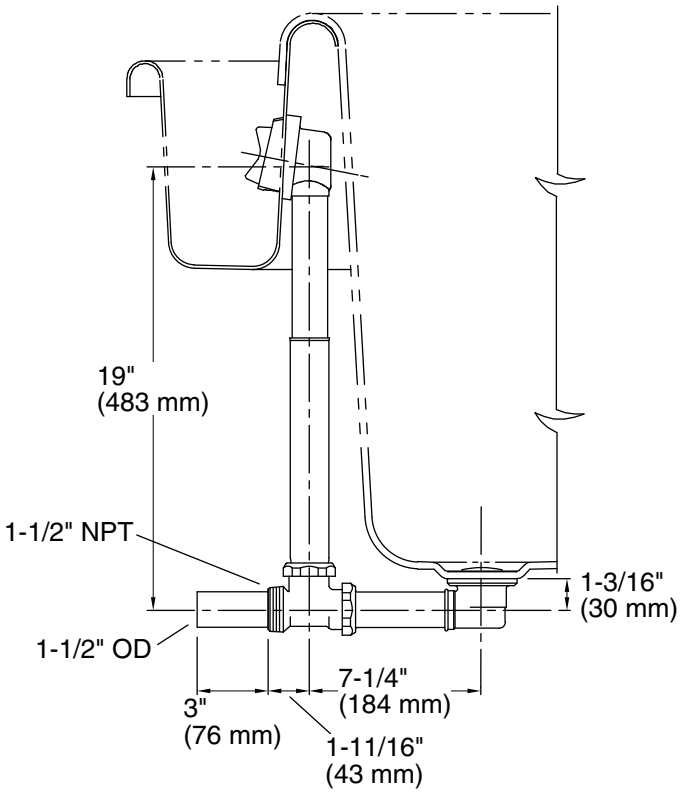

Above-the-Floor

Technical Information
All product dimensions are nominal.

Material: Brass

Notes
Install this product according to the installation instructions.