NOTES:

1. OPEN DOOR VIEW INCLUDES HINGE SPACE OFFSET.

PRODUCT	H1	DOOR 1 SIZE	DOOR 2 SIZE
		ROUNDED TO THE NEAREST 1/32	
UP2484	84"	10 15/16" X 28 1/32"	10 15/16" X 48 17/32"
UP2490	90"	10 15/16" X 34 1/32"	10 15/16" X 48 17/32"
UP2496	96"	10 15/16" X 40 1/32"	10 15/16" X 48 17/32"

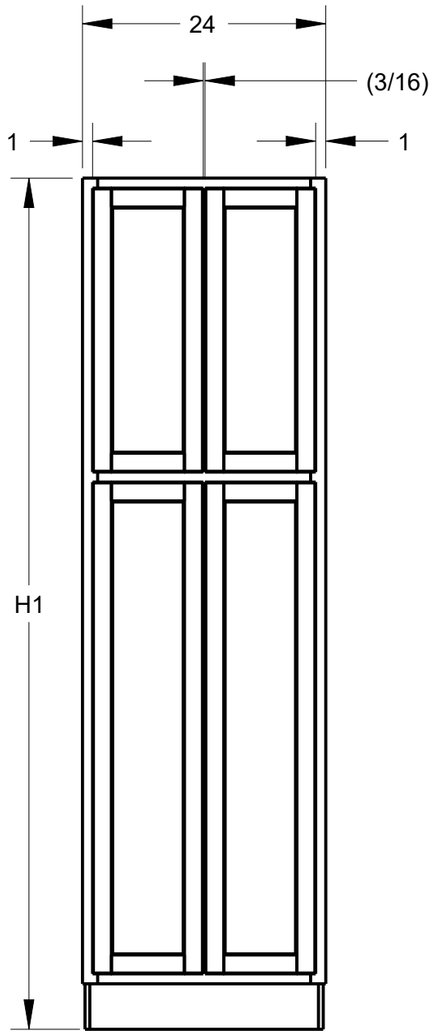

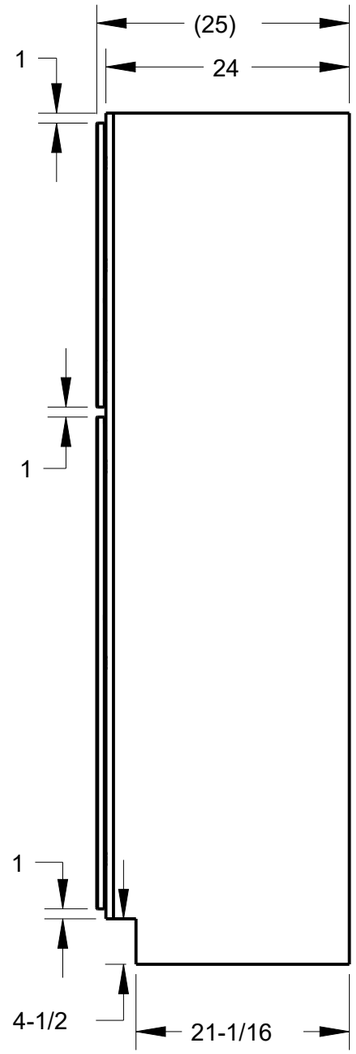

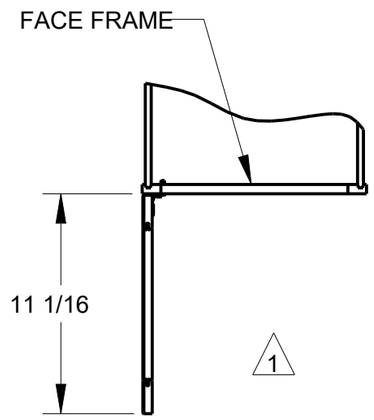

1

OPEN DOOR

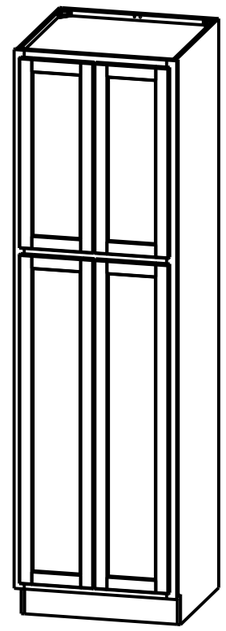

PRODUCT SHOWN UP2496

DOCUMENT STATUS	**Released**

THIRD ANGLE PROJECTION		hardware resources	
MATERIAL: N/A	FINISH: N/A	DESCRIPTION: UP2484, UP2490, UP2496, HALF OVERLAY	
DRAWN BY: ANDY BROWN	DATE: 24FEB2021		
DESIGNED BY: NORTHPOINT	DATE:	DRAWING NUMBER: UP2484-UP2490-UP2496_HALF	REV: A
APPROVED BY: ALAN CHEN	DATE: 09MAR2021	SIZE: A3	SCALE: 0.071 / SHEET: 1 / 1

HARDWARE RESOURCES RESERVES THE RIGHT TO CHANGE SPECIFICATIONS WITHOUT NOTICE.
IN CASE OF A DISCREPENCY, ACTUAL PART GEOMETRY SUPERSEDES THIS DOCUMENT.

THE INFORMATION CONTAINED WITHIN THIS DRAWING IS THE SOLE PROPERTY OF HARDWARE RESOURCES INC. ANY REPRODUCTION IN PART OR WHOLE WITHOUT WRITTEN PERMISSION OF HARDWARE RESOURCES INC. IS PROHIBITED.