KINGSTON

Pedestal 2-Tier Steel Frame Towel Rack

Installation Instructions

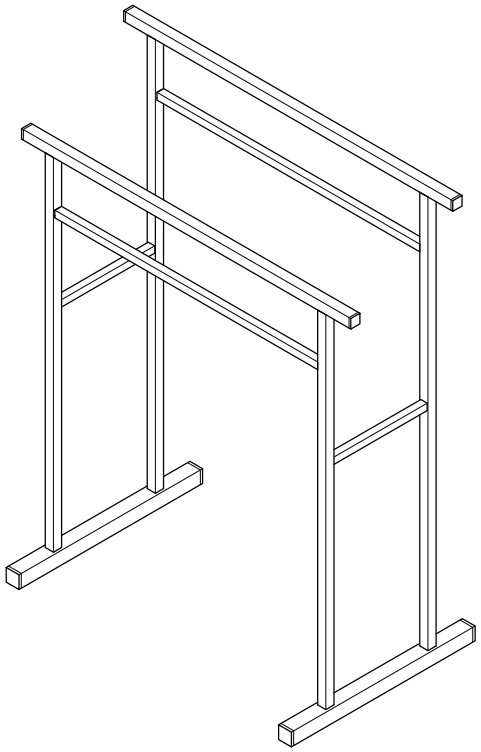

Parts:

Straight Tube	Straight Tube	H-Frame	Counterweight rod
A 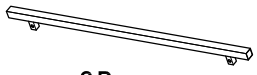 2 Pcs	B  2 Pcs	C 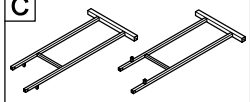 1 Pc	D 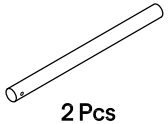 2 Pcs
Sift Head(Big)	**Sift Head(Small)**	**Screw**	**Gasket**
E  4 Pcs	F  4 Pcs	G  8 Pcs	H  4 Pcs

www.kingstonbrass.com

TOLL-FREE CUSTOMER SERVICE: 1-877-2-KBRASS
TECHNICAL SUPPORT E-mail: service@kingstonbrass.com
12775 Reservoir Street, Chino, CA 91710

Tools Required

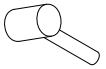 Rubber Mallet

 Allen Wrench

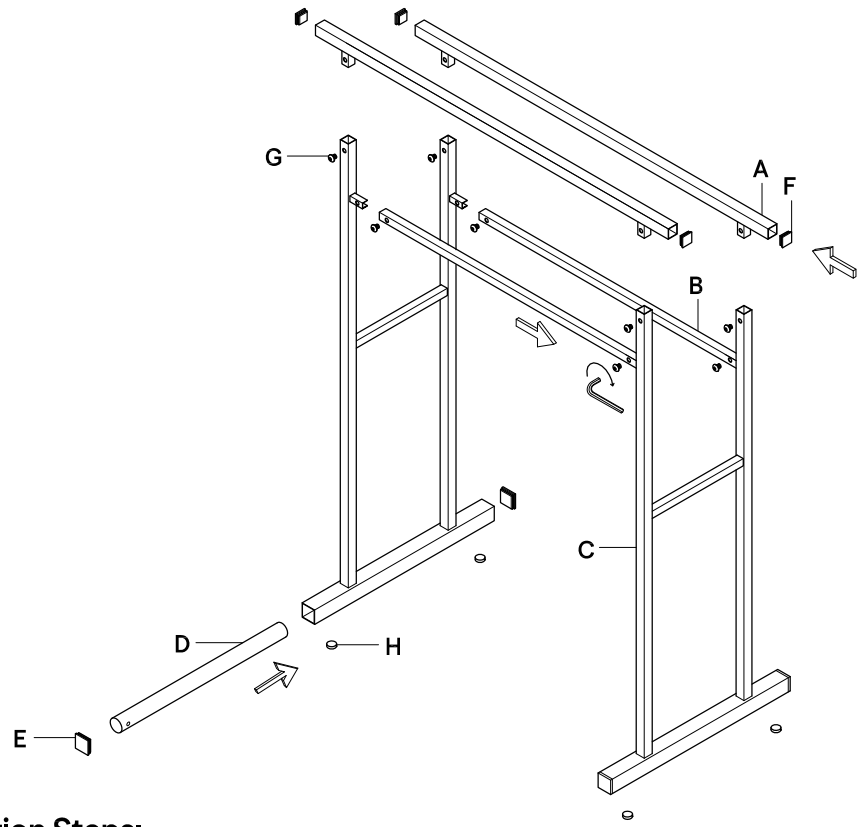

Installation Steps:

Step 1. Locate the straight tube (part B) and the H-Frame (part C), secure together using the provided screws (part G) and Allen wrench. Repeat on other side and with the remaining straight tube.

Step 2. Using (part A), insert into the top of the H-Frame (part C) and using the provided screws (part G) tighten with an Allen wrench. Repeat on other side and with the remaining part.

Step 3. Insert the counterweight rod (part D) into the base of the H-Frame (part C). Repeat for the other side.

Step 4. Next, use the sift heads (part F) to cover the exposed ends on (part A). Use (part E) to cover the exposed holes on (part C).

Step 5. To ensure product longevity, use the gaskets (part H) to cover the four exposed holes on the bottom of the towel rack base.

Cleaning

Clean with a damp cloth only.
Avoid using metal or abrasive polishes.

©2025 LVC Kingston LLC. All Rights Reserved.

2025-05-KB