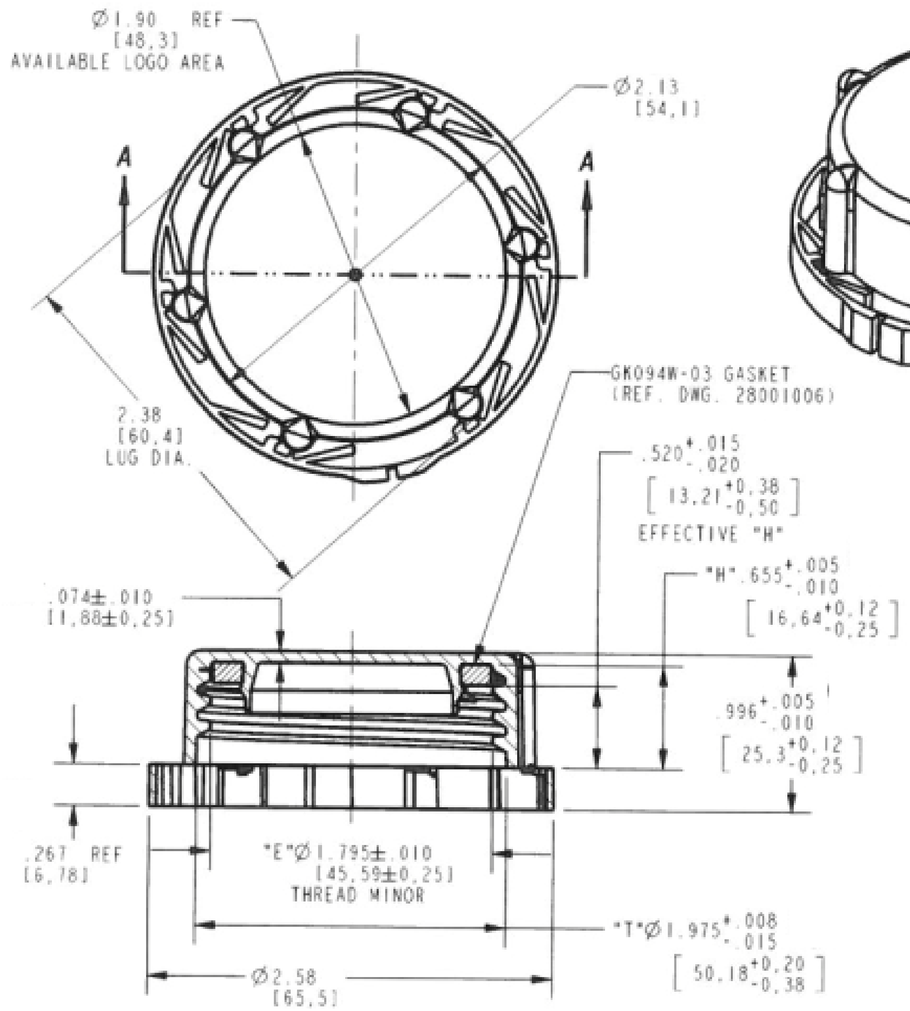

SECTION A-A

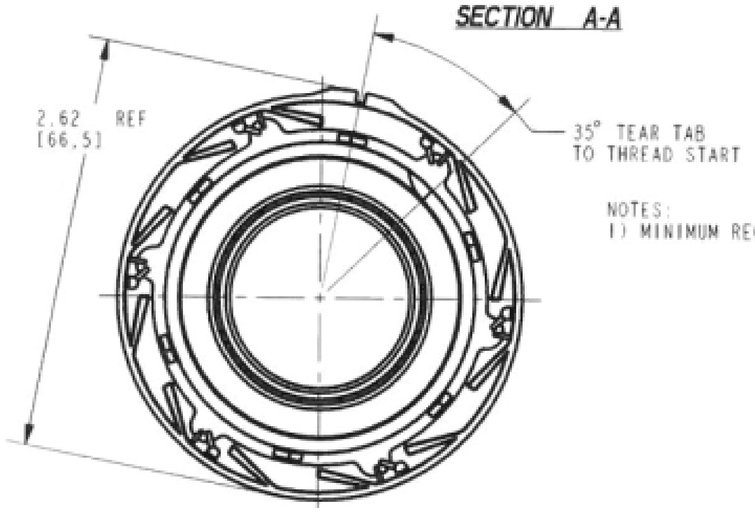

NOTES:
1) MINIMUM RECOMMENDED CAP TORQUE: 50 in-lb

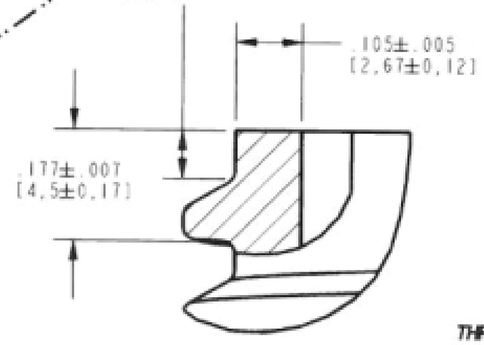

THREAD START DETAIL
SCALE 4

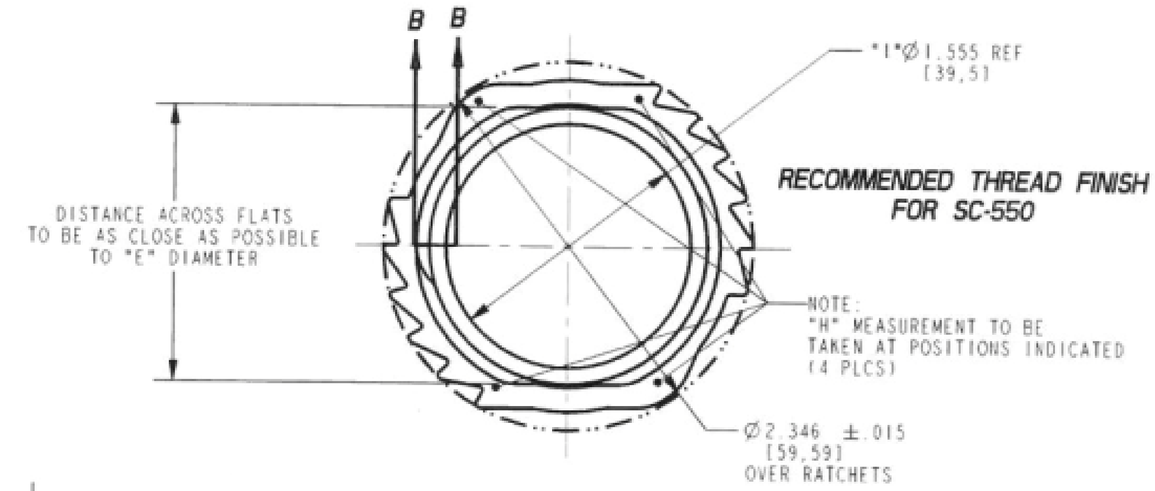

RECOMMENDED THREAD FINISH
FOR SC-550

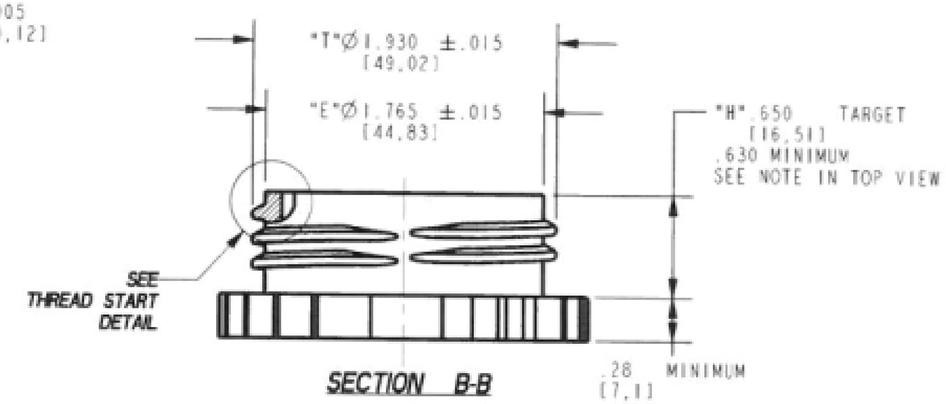

SECTION B-B

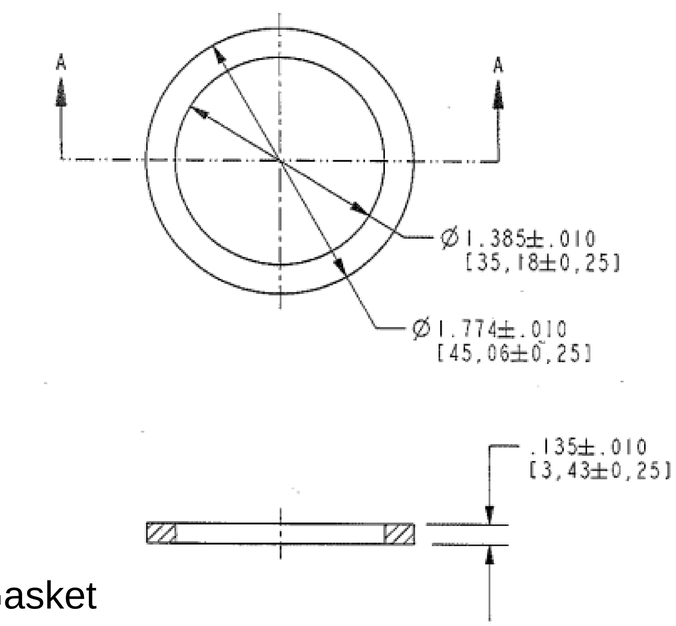

EPDM Gasket

DISCLAIMER	DISTRIBUTED BY:	REF NO.:
THIS INFORMATION IS PROVIDED AS A GENERAL GUIDE, INCLUDING DIMENSIONS. IT IS THE CUSTOMER'S RESPONSIBILITIES TO SELECT THE PROPER CONTAINER FOR PRODUCT AND APPLICATION COMPATIBILITY.	ipeline Packaging	DWG31460
	DESCRIPTION: 50 mm HDPE Tamper Evident Cap with EPDM Gasket 94W-3	