NOTES:

1. OPEN DOOR VIEW INCLUDES HINGE SPACE OFFSET.

PRODUCT	W1	L1	DRAWER SIZE	DOOR SIZE
			ROUNDED TO THE NEAREST 1/32	
B24	24"	11 1/32"	22 1/16" X 5 23/32"	10 15/16" X 21 11/32"
B27	27"	12 17/32"	25 1/32" X 5 23/32"	12 13/32" X 21 11/32"
B30	30"	14 1/32"	28 1/32" X 5 23/32"	13 29/32" X 21 11/32"

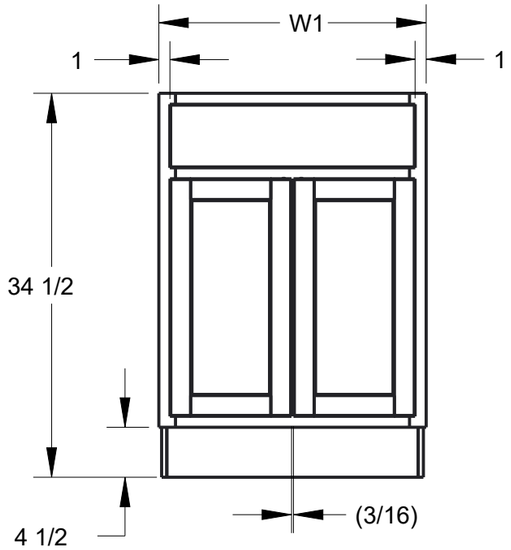

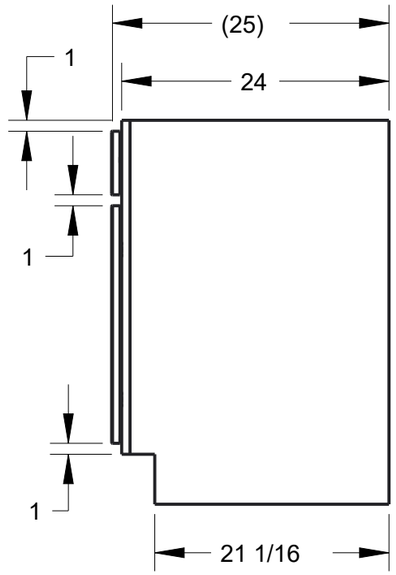

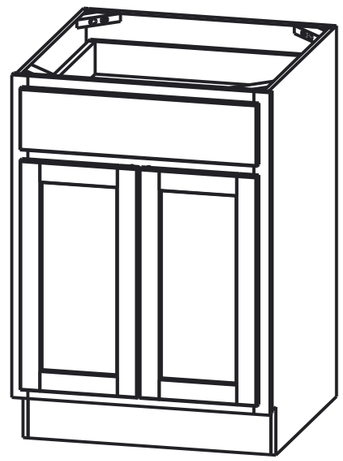

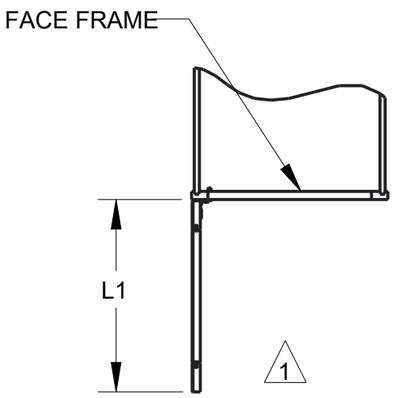

OPEN DOOR

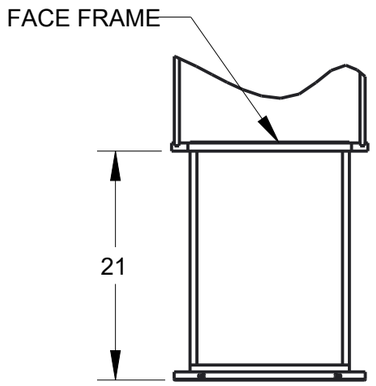

OPEN DRAWER

PRODUCT SHOWN B24

DOCUMENT STATUS: **Released**

THIRD ANGLE PROJECTION		hardware resources	
MATERIAL: N/A	FINISH: N/A	DESCRIPTION: B24, B27, B30 HALF OVERLAY	
DRAWN BY: ANDY BROWN	DATE: 22FEB2021		
DESIGNED BY: NORTHPOINT	DATE:	DRAWING NUMBER: B24-B27-B30_FULL_OVERLAY	REV: A
APPROVED BY: JOEL GOMEZ	DATE: 15MAR2021	SIZE: A3 / SCALE: 0.071	SHEET: 1 / 1

HARDWARE RESOURCES RESERVES THE RIGHT TO CHANGE SPECIFICATIONS WITHOUT NOTICE.
IN CASE OF A DISCREPENCY, ACTUAL PART GEOMETRY SUPERSEDES THIS DOCUMENT.

THE INFORMATION CONTAINED WITHIN THIS DRAWING IS THE SOLE PROPERTY OF HARDWARE RESOURCES INC. ANY REPRODUCTION IN PART OR WHOLE WITHOUT WRITTEN PERMISSION OF HARDWARE RESOURCES INC. IS PROHIBITED.