KINGSTON

TO ORDER PARTS, CALL: 1-877-252-7277
www.kingstonbrass.com

GKFA301810BC

30" Solid Surface White Stone Farmhouse Single Bowl Kitchen Sink

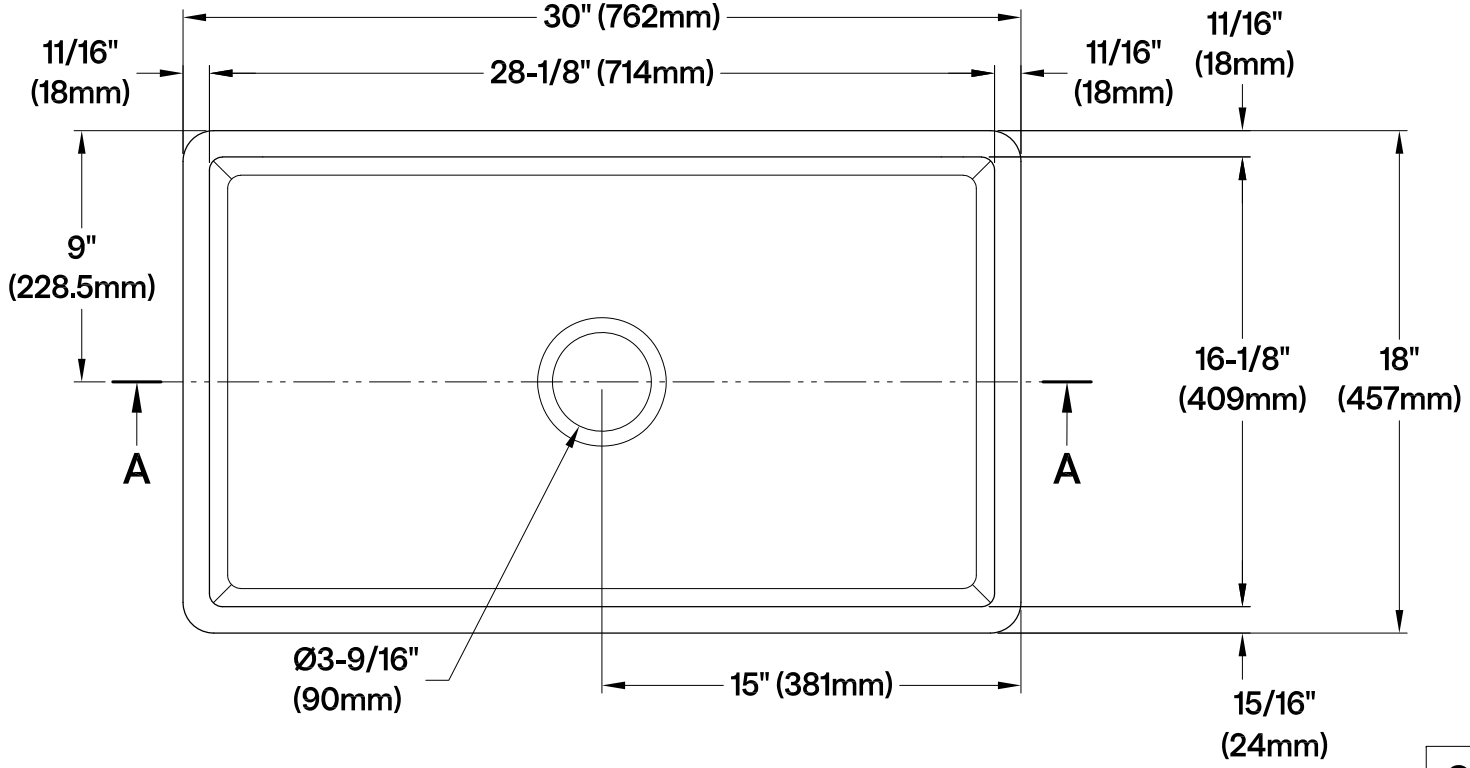

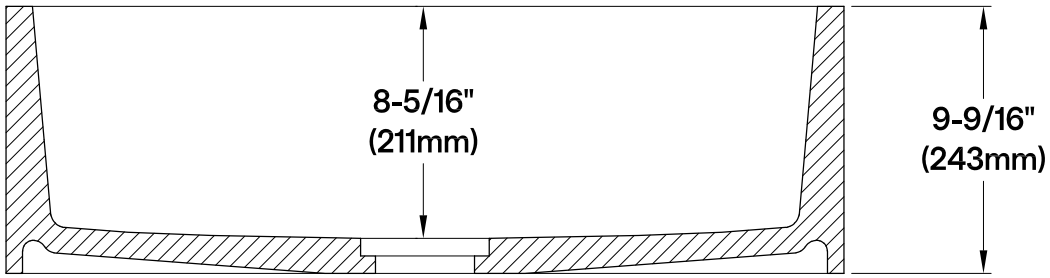

Section A-A

Strainer

