KINGSTON

TO ORDER PARTS, CALL: 1-877-252-7277
www.kingstonbrass.com

BAK175348MB,C,ORB,BB,SN

24" Dual Towel Bar

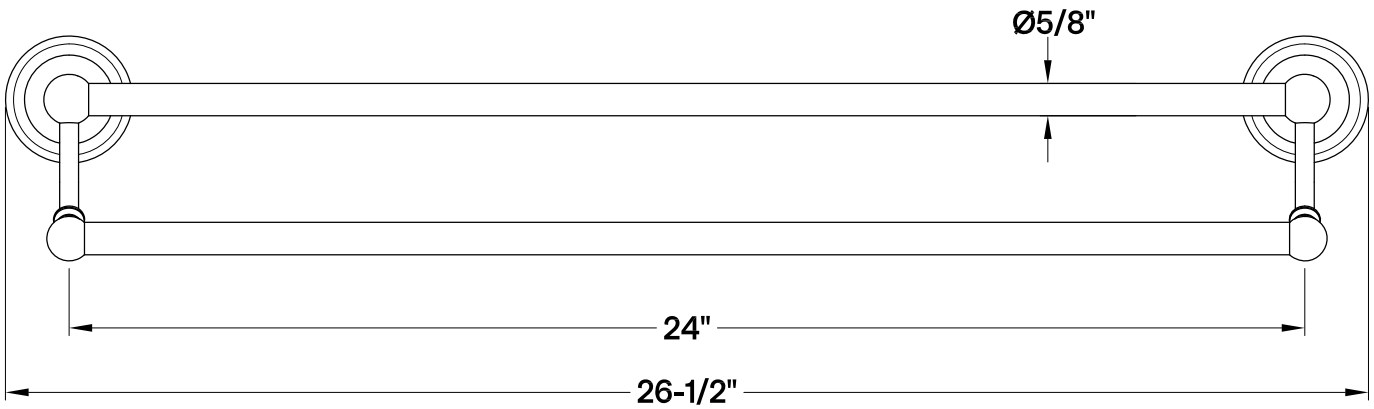

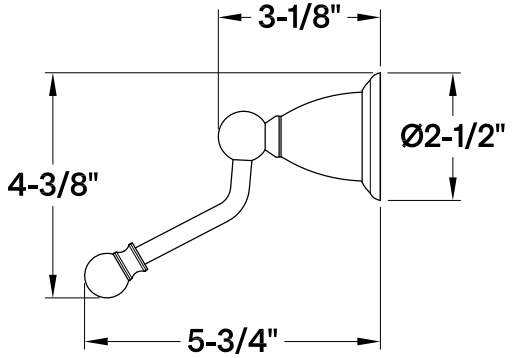

KINGSTON

TO ORDER PARTS, CALL: 1-877-252-7277
www.kingstonbrass.com

BAK175348MB,C,ORB,BB,SN

Towel Ring

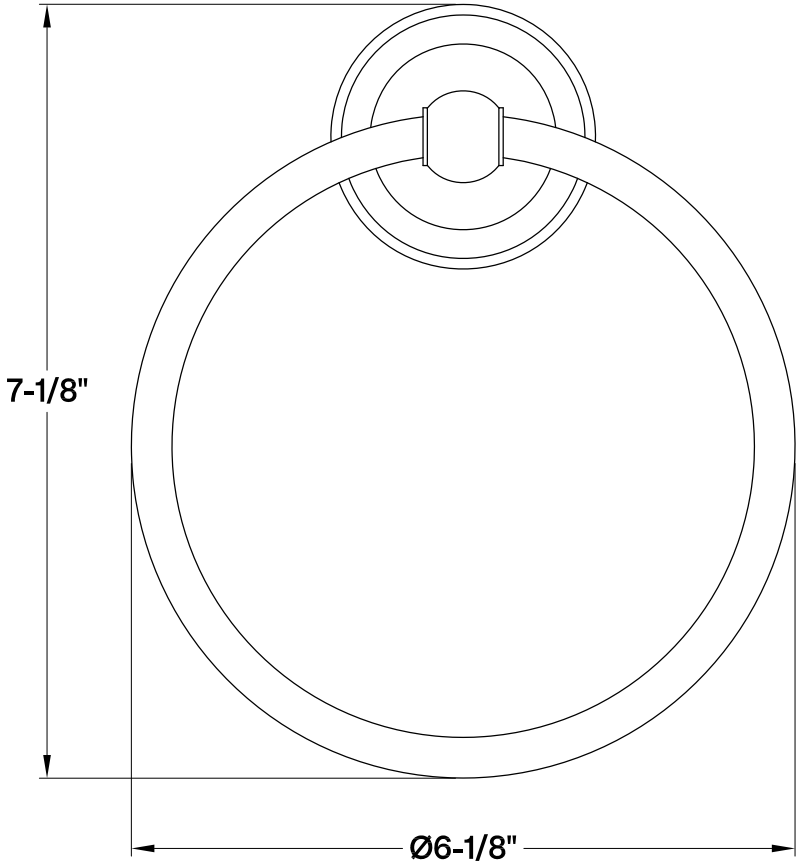

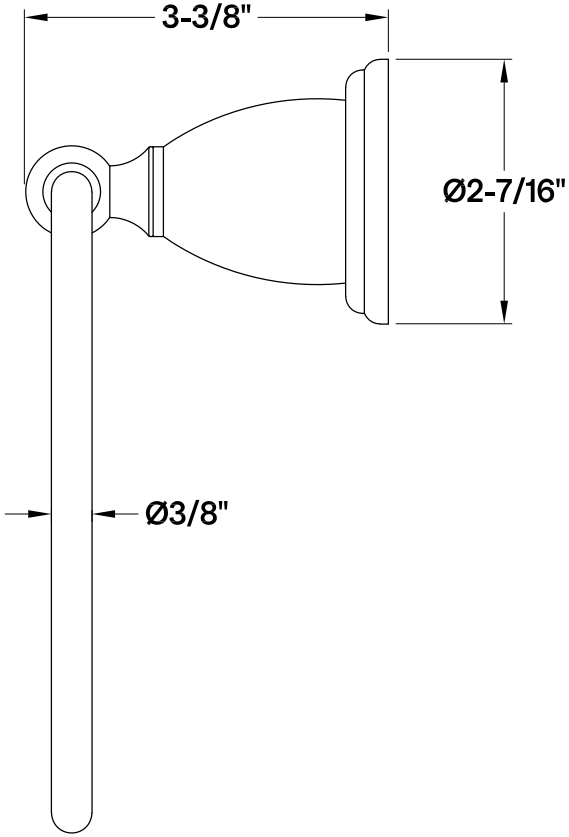

KINGSTON

TO ORDER PARTS, CALL: 1-877-252-7277
www.kingstonbrass.com

BAK175348MB,C,ORB,BB,SN

Toilet Paper Holder

