FLEXSTEEL®

Straight Console

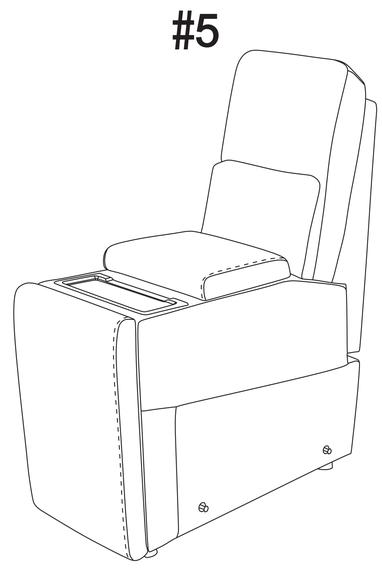

IMPORTANT NOTE

Read these instructions carefully and familiarize yourself with each procedure before assembling the furniture. Check that you have all the component parts and familiarize yourself with each part before proceeding.

Take all the fittings out of the plastic bag and separate them into groups. Ensure you have enough space to lay out all the parts before assembly. To prevent damage to the parts, we recommend that you assemble the unit on a soft, level surface.

Part List

A. Console Back
1 piece

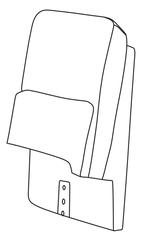

B. Console Base
1 piece

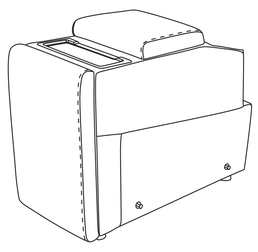

C. Transformer
2 pieces

D. AC Power Cable
2 pieces

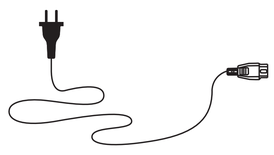

Assembly Instructions

STEP 1

Detach the Transformers (C) and the AC Power Cables (D) from the bottom of the Console Base (B). (See Figure 1.)

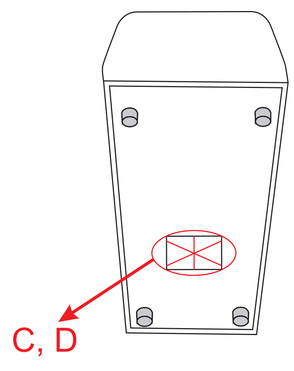

Figure 1

STEP 2

Begin sectional connection by placing the piece #1 in desired location in the room. Then start sectional connection by placing #2 into piece #1. Continue sectional connection with piece #3 thru #6 following the same method described above. (See Figure 2.)

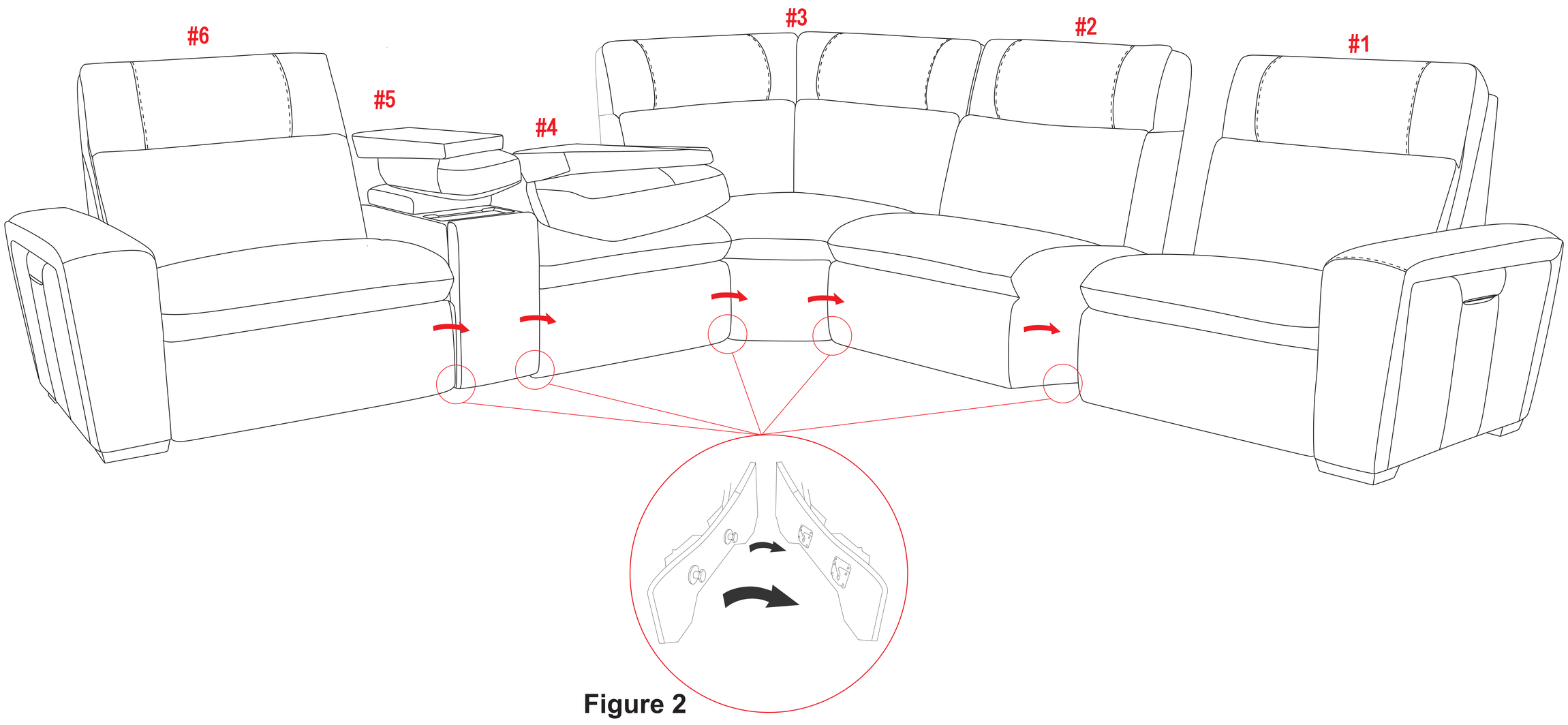

Figure 2

STEP 3

Connect the two Transducer cables, two Speaker L and R cables, and Wireless charge cable between piece #4 and #5. Ensure to match the correct colored Speaker cables to each other, red to red and white to white. (See Figure 3.)

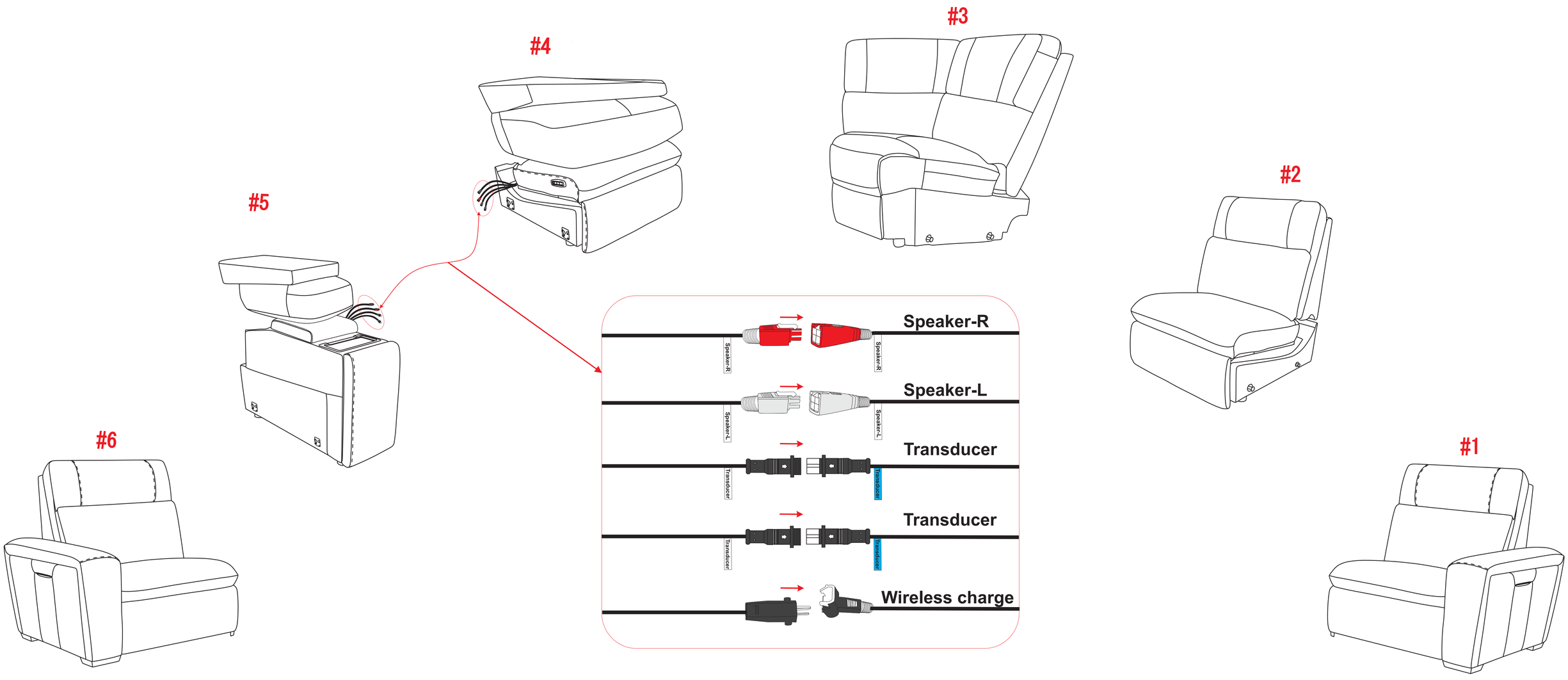

Figure 3

STEP 4

After connecting all cables between the sectional pieces, neatly secure the cables behind each seat using the provided Velcro straps. (See Figure 4.)

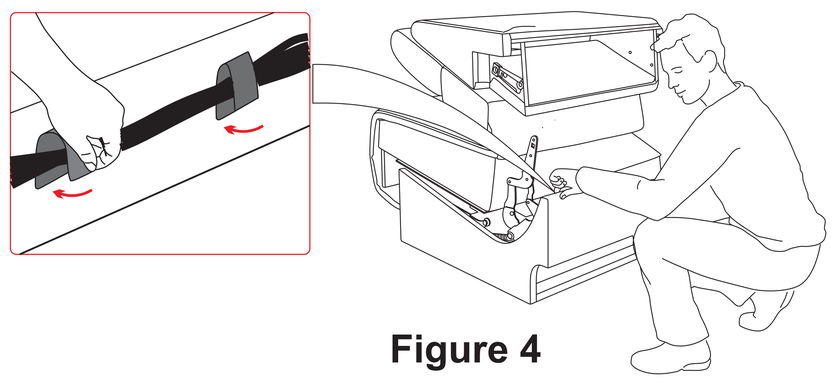

Figure 4

STEP 5

Attach the Back to the Seat for pieces #4, #5. Ensure the latches fit well. (See Figure 5.)

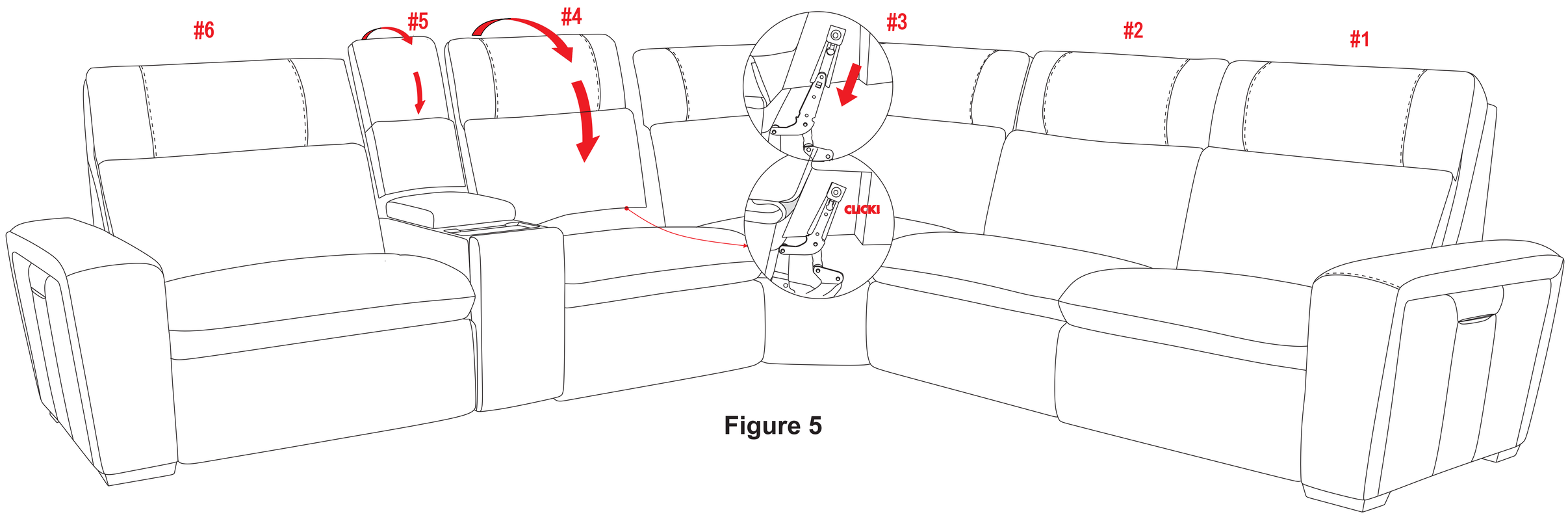

Figure 5

STEP 6

Connect the power cables on the back of the seats of pieces #1, #4, #5 and #6 each to a Transformer.

Connect an AC Power Cable to each Transformer, and plug the AC Power Cables into nearby outlets. (See Figure 6.)

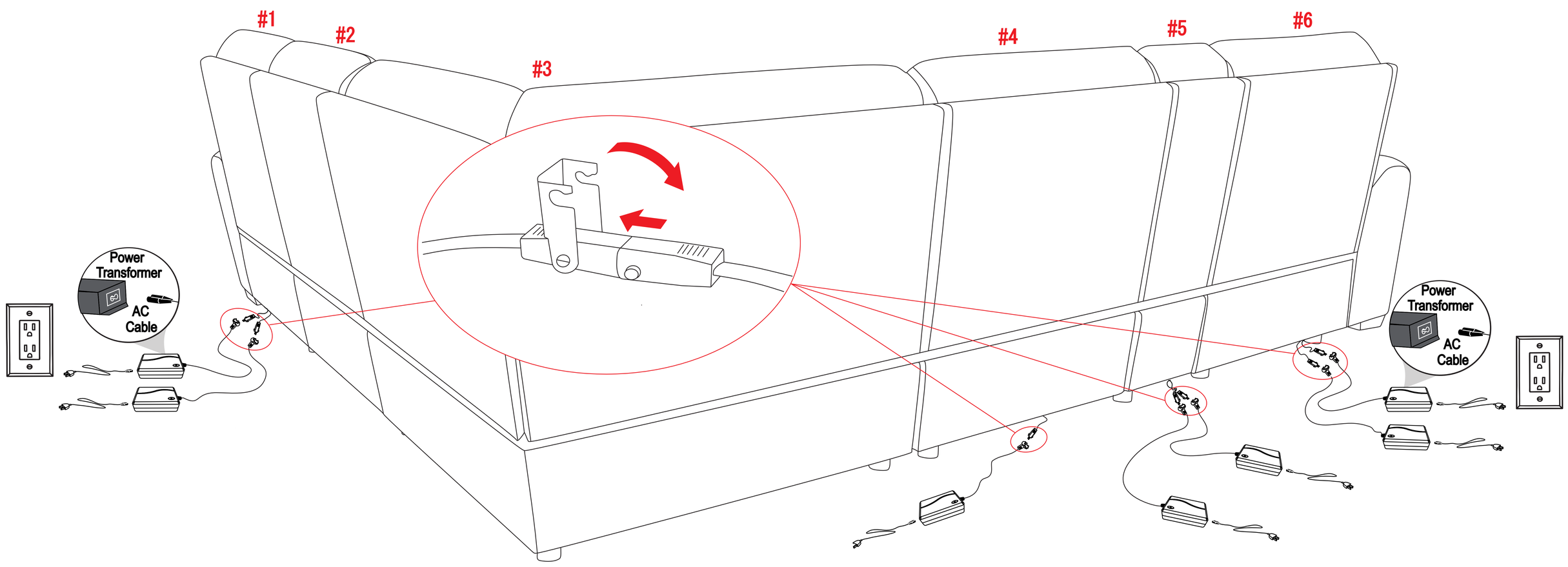

Figure 6

Disassembly Instructions

Pull up the Console Back (A) out of Console Base (B). (See Figure 7.)

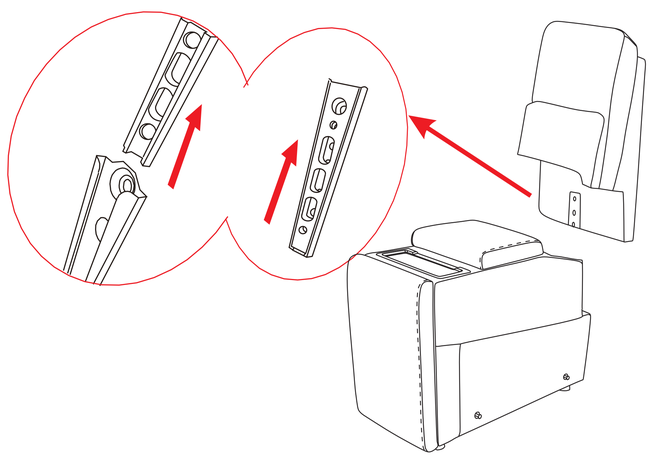

Figure 7

Console Base Functions

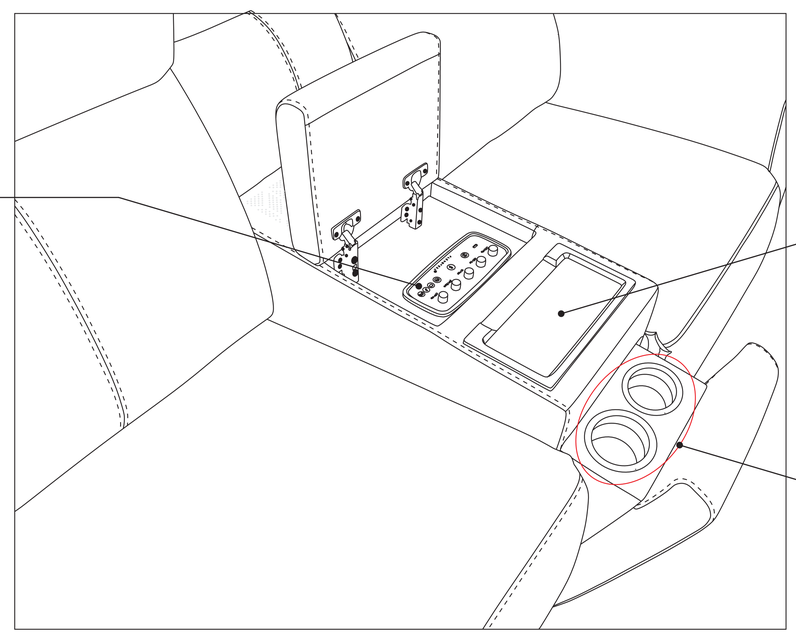

Wireless Charging Pad

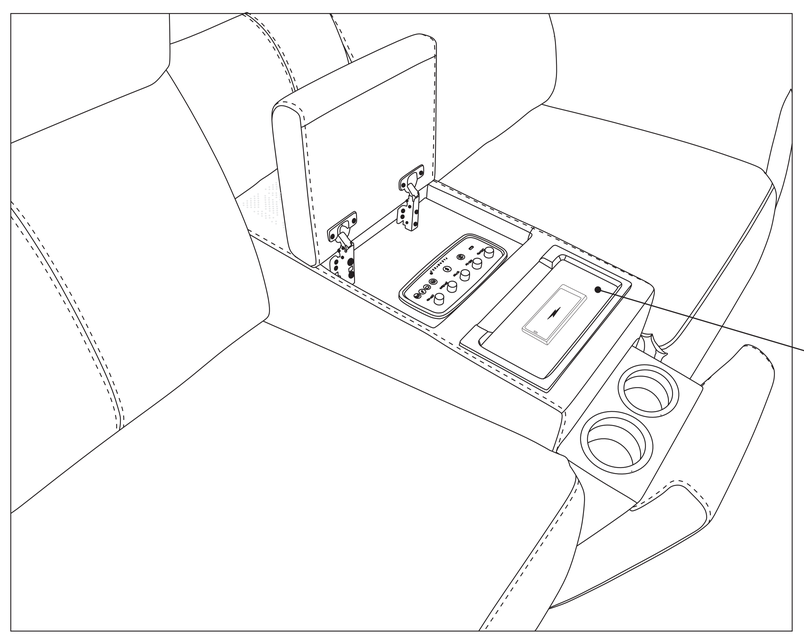

User Guide for Wireless Charger

Attention

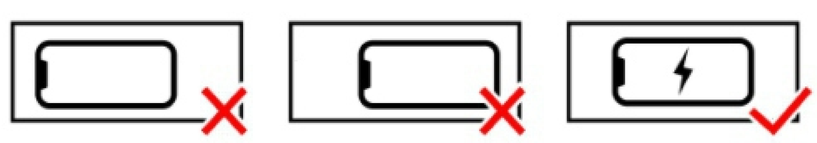

1. It is common for heat to be generated in wireless charging through the energy transfer process. This is part of the normal wireless energy transfer.
2. Phone should be centered on the wireless charging icon if an icon is present. The further the current must travel, charging effciency is reduced and more energy is lost to heat.
3. Phone should be centered on the tray if an icon is not present. The further the current must travel, charging effciency is reduced and more energy is lost to heat.
4. Make sure there aren't any foreign objects on the charger when charging. This can cause the charger to start stop multiple times if the foreign object detector senses an object.
5. Make sure to disconnect the phone from Apps and WiFi during wireless charging while charging and don't use the phone while wireless charging.

IMPORTANT NOTE

- To avoid any risk of suffocation to children or pets, dispose of all plastic bags immediately.
- To ensure proper performance, occasionally check for loose hardware and tighten as needed.
- If the reclining functions are not working properly, check for loose cable connections before contacting the retailer.