ASSEMBLY INSTRUCTIONS

6-DRAWER DRESSER

A Top Panel

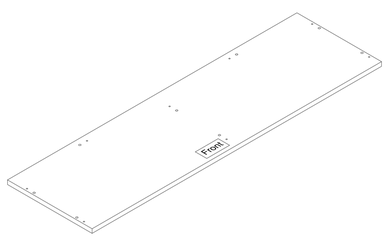

1pc

B Left Side Panel

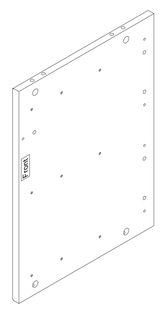

1pc

C Right Side Panel

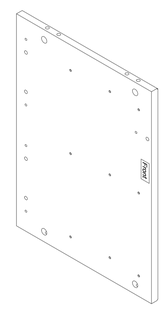

1pc

D Bottom Frame

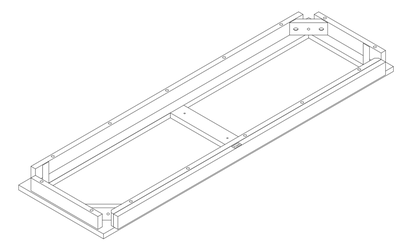

1pc

E Partition

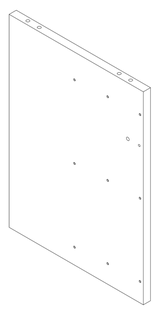

1pc

F Center Bar

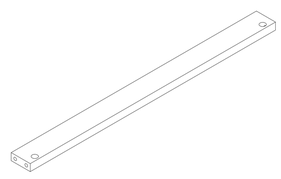

1pc

G Back Top Panel

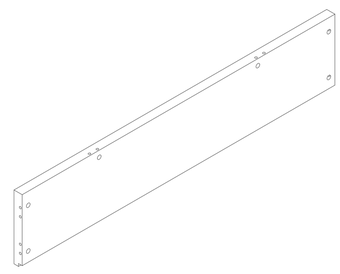

1pc

H Back Bottom Panel

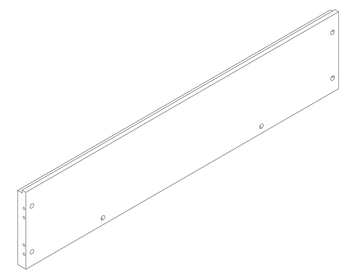

1pc

I Post

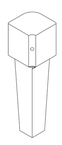

4pcs

J Small Drawer Side (Left)

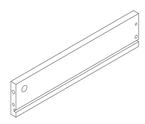

2pcs

K Small Drawer Side (Right)

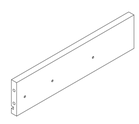

1pc

L Small Drawer Front (Left)

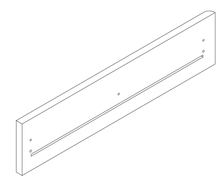

1pc

M Small Drawer Front (Right)

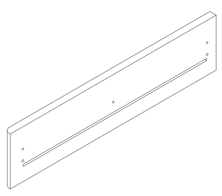

4pcs

N Small Drawer Back

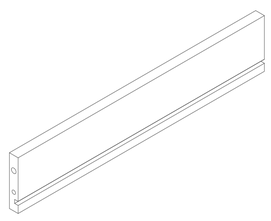

2pcs

O Big Drawer Side (Left)

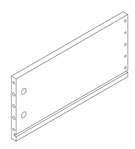

2pcs

P Big Drawer Side (Right)

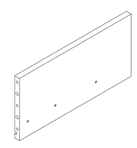

1pc

Q Big Drawer Front (Left)

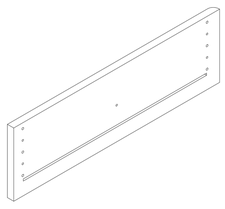

2pcs

R Big Drawer Front (Right)

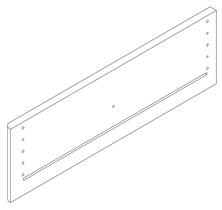

2pcs

S Big Drawer Back

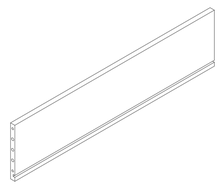

4pcs

T Drawer Base

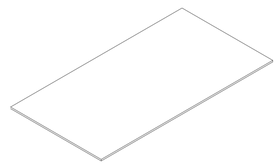

6pcs

U Runner
250mm

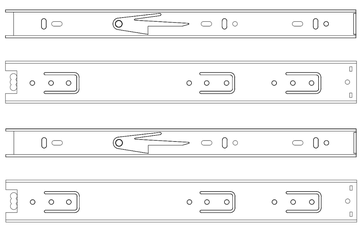

6sets

V Handle

6pcs

W Dowel
M6 x 30mm

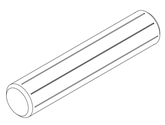

56pcs

X Dowel
M8 x 35mm

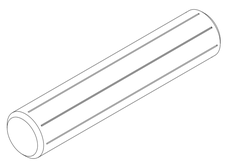

28pcs

Y Cam Bolt
5 x 25mm

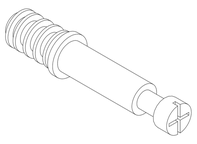

66pcs

Z Cam Lock
15 x 12mm

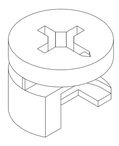

6pcs

AA Cam Lock Cover
17 x 5mm

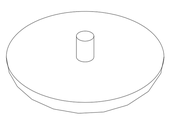

56pcs

AB Screw
M3 x 16mm

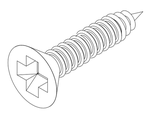

28pcs

AC Screw
M4 x 38mm

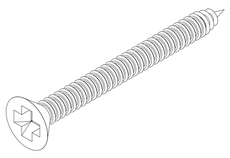

66pcs

AD Panhead Screw
M4 x 25mm

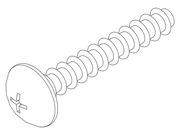

66pcs

AE JCBC Bolt
M6 x 60mm

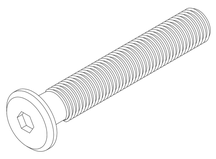

66pcs

AF Spring Washer
M8

72pcs

AG Flat Washer
M8

2pcs

AH Allen Key
M4

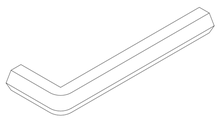

6pcs

AI Anti-Tip Kit

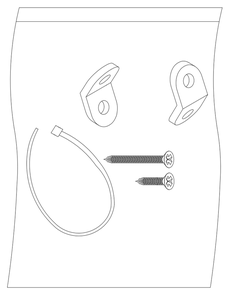

4pcs

4pcs

4pcs

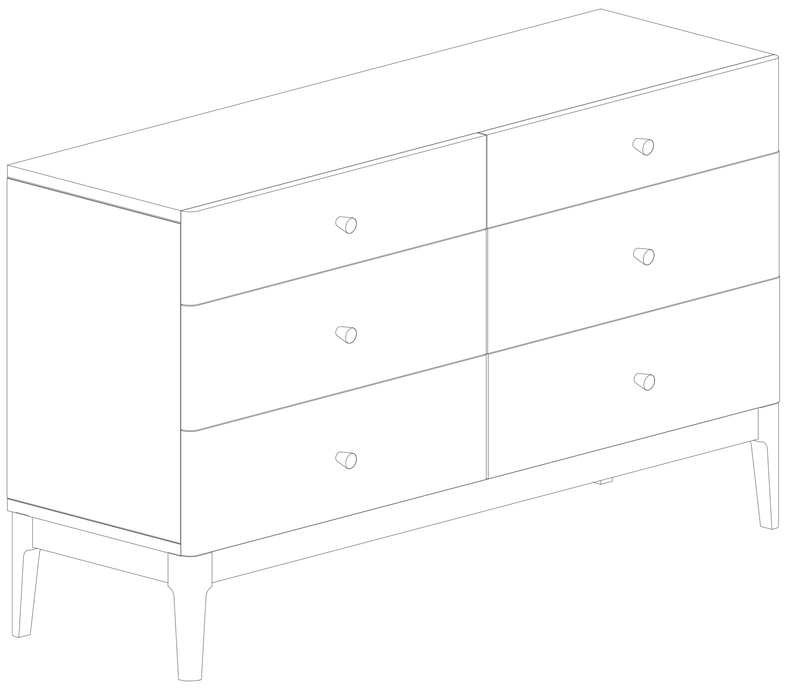

These pages list all the contents included in the box. Please take the time to identify the hardware as well as the individual components to this product. As you unpack and prepare for assembly, place the contents on a carpeted or padded area to protect them from damage.

1 Insert Cam Bolt (Y) into the Top Panel (A) with a screwdriver (not provided).

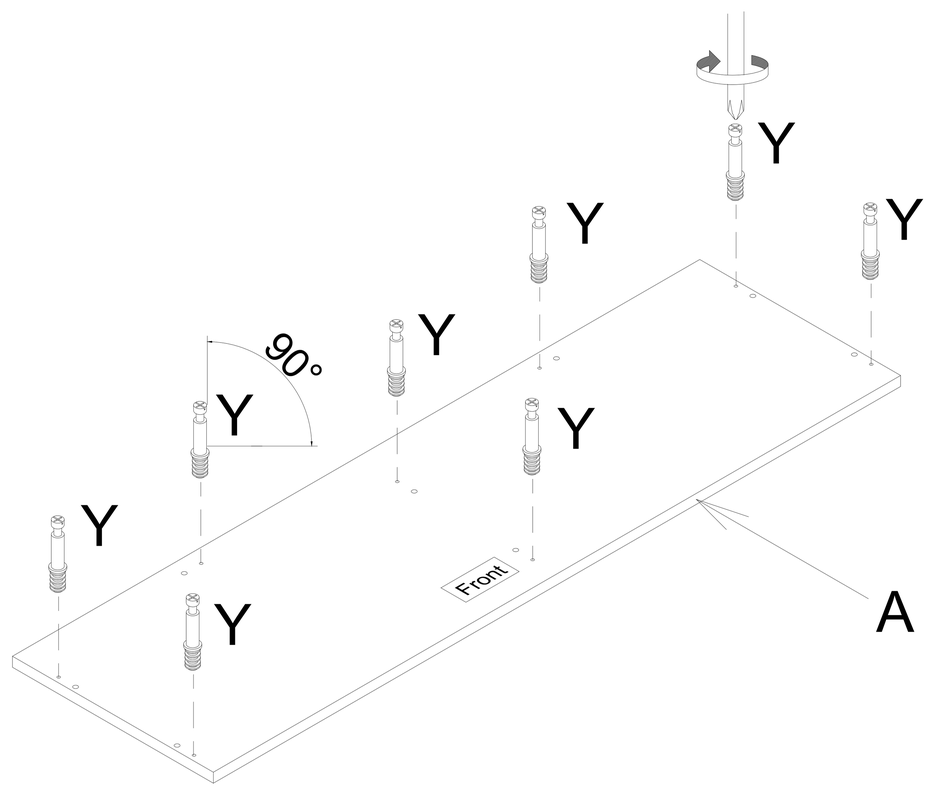

2 Insert Dowel (X), Cam Bolt (Y) and Cam Lock (Z) into the Left & Right Side Panel (B & C) with a screwdriver (not provided).

NOTE : - Ensure the arrows on each Cam Lock (Z) point towards the nearest edge with holes.

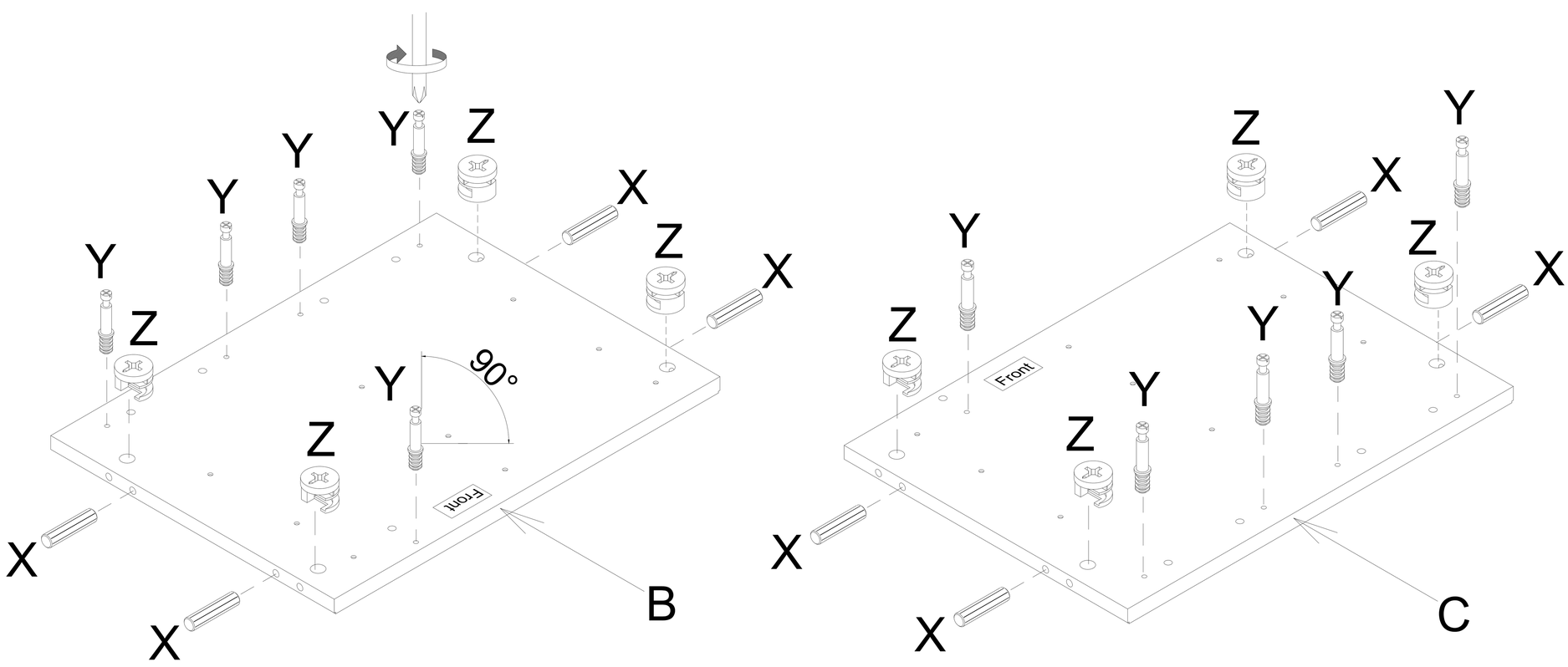

3 Disassemble the Runner (U) into two parts. Attach one part with runner rollers to the Left & Right Side Panel (B & C) using Screw (AB) with a screwdriver (not provided). Attach the other part with slides to the Left & Right Small Drawer Side (J & K) and Left & Right Big Drawer Side (O & P).

NOTE : - Runner (U) should face the front of the panel.
- Assemble Screw (AB) from the front of the runner, starting with AB[1], AB[2] then AB[3].
- Ensure screws are installed vertically without tilting to fit properly into the holes.

EXTENSION RUNNER DISASSEMBLE STEPS:

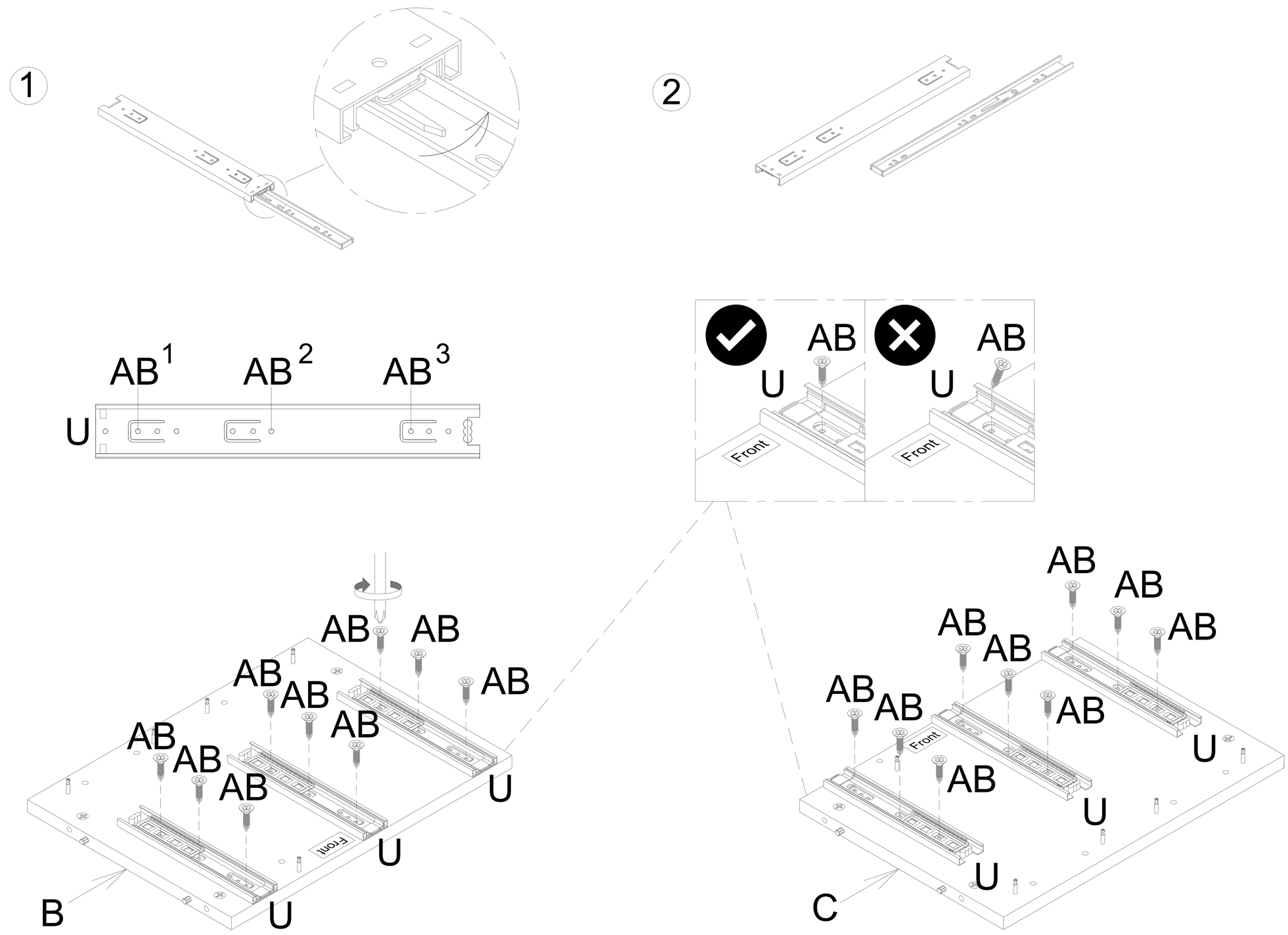
1
2
AB1
AB2
AB3
U
AB
U
Front
AB
U
Front
AB
AB
AB

5 Disassemble the Runner (U) into two parts. Attach one part with runner rollers to the Partition (E) using Screw (AB) with a screwdriver (not provided). Attach the other part with slides to the Left & Right Small Drawer Side (J & K) and Left & Right Big Drawer Side (O & P).

NOTE : - Runner (U) should face the front of the panel.
- Assemble Screw (AB) from the front of the runner, starting with AB[1], AB[2] then AB[3] .
- Ensure screws are installed vertically without tilting to fit properly into the holes.

EXTENSION RUNNER DISASSEMBLE STEPS:

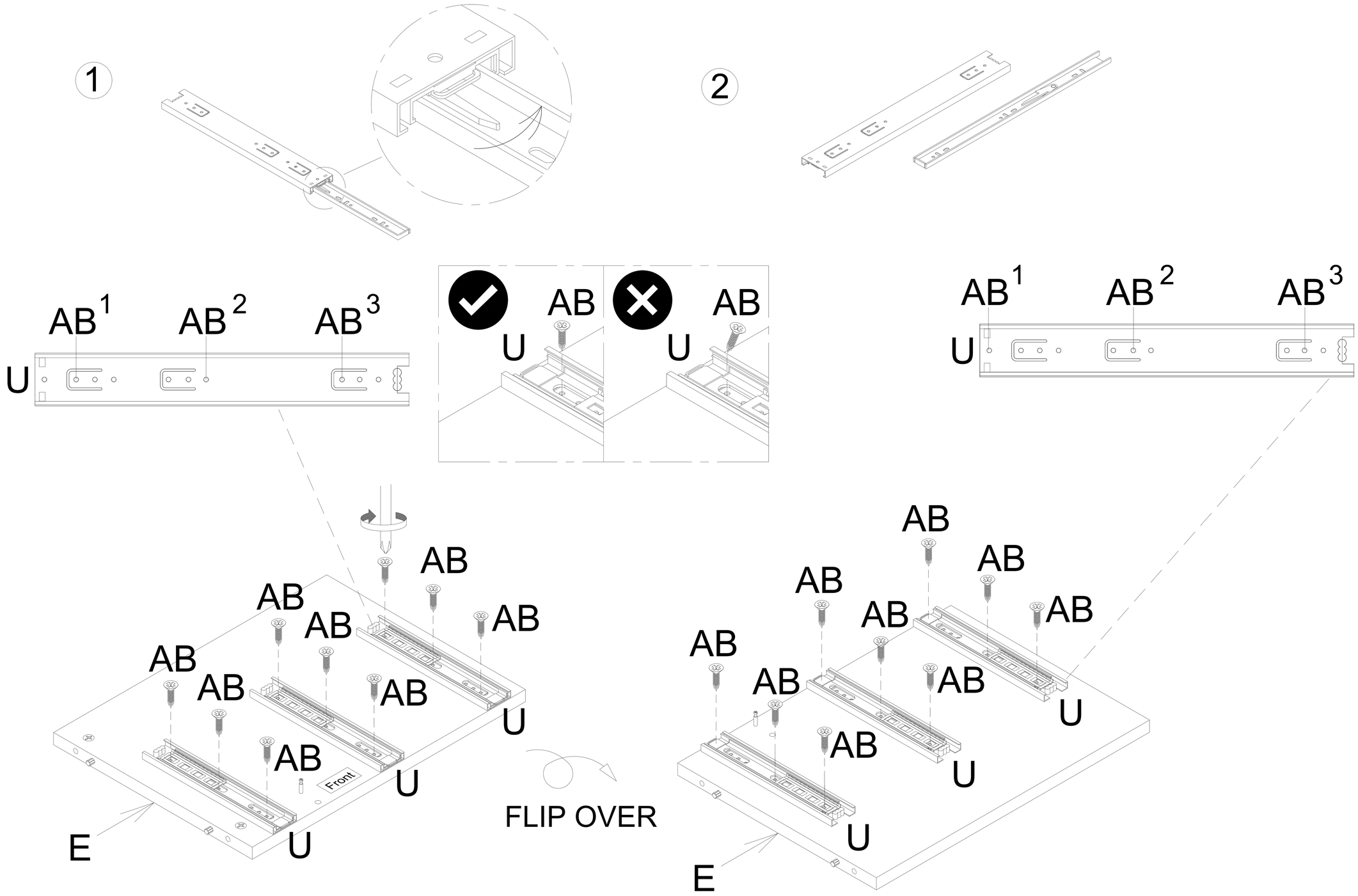

6 Attach the Post (I) to Bottom Frame (D) using JCBC Bolt (AE), Spring Washer (AF) and Flat Washer (AG) with the Allen Key (AH).

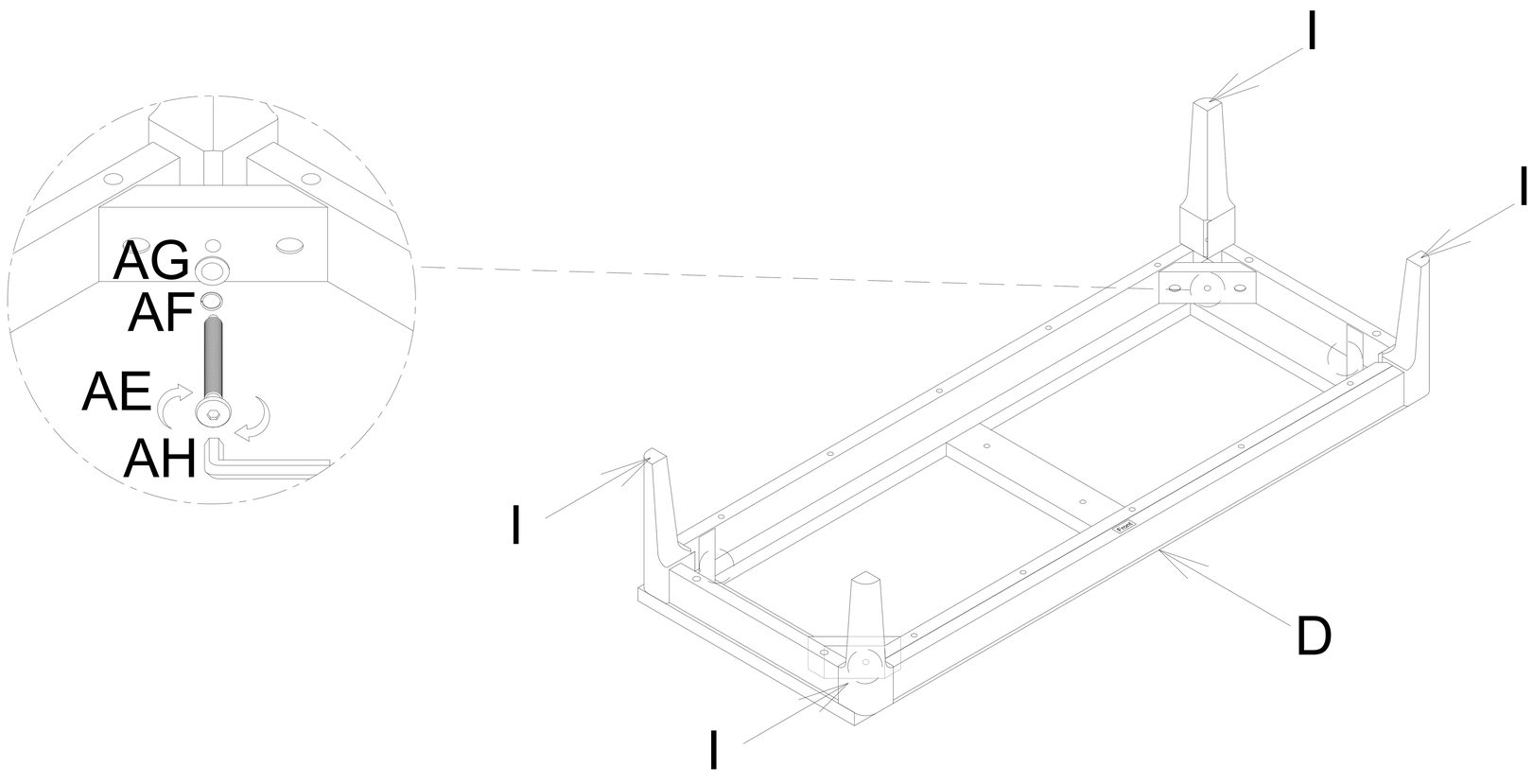

7 Flip over the Bottom Frame (D). Insert Cam Bolt (Y) into the Bottom Frame (D) with a screwdriver (not provided).

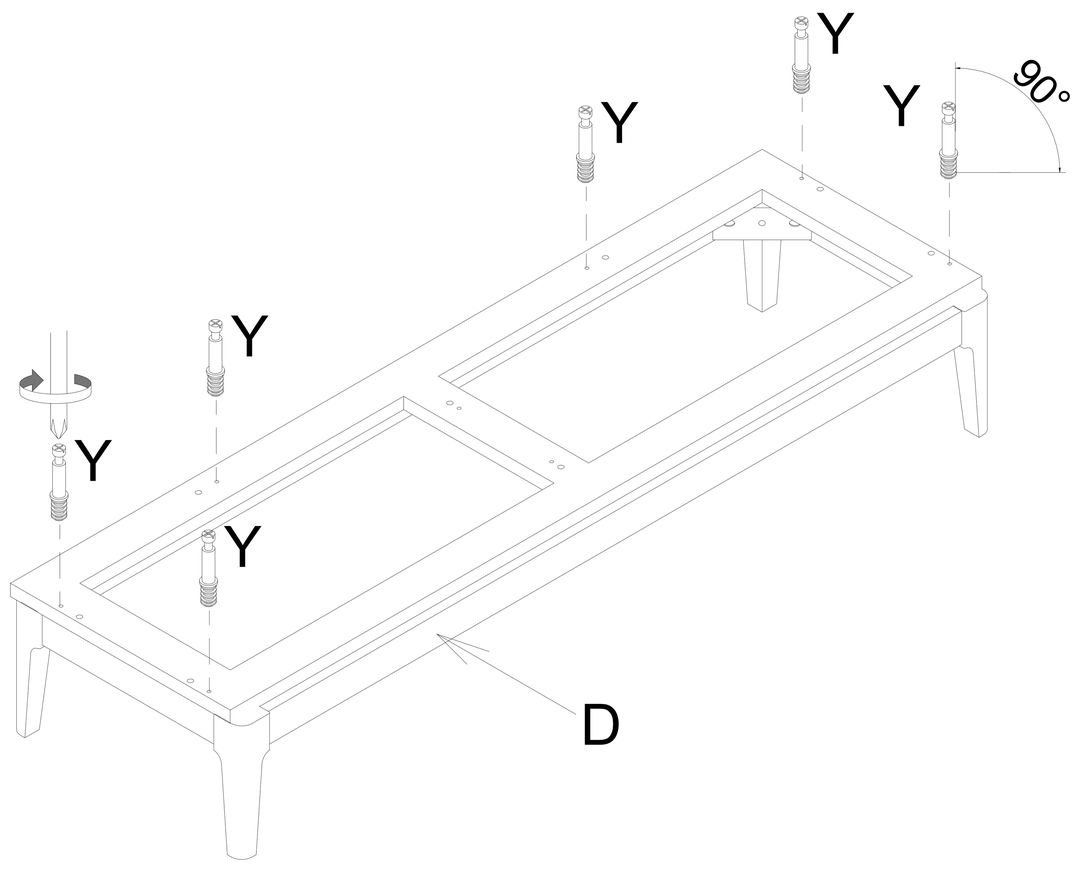

8 Insert Dowel (X) and Cam Lock (Z) into the Back Top Panel (G), the Back Bottom Panel (H) and the Center Bar (F).

NOTE : - Ensure the arrows on each Cam Lock (Z) point towards the nearest edge with holes.

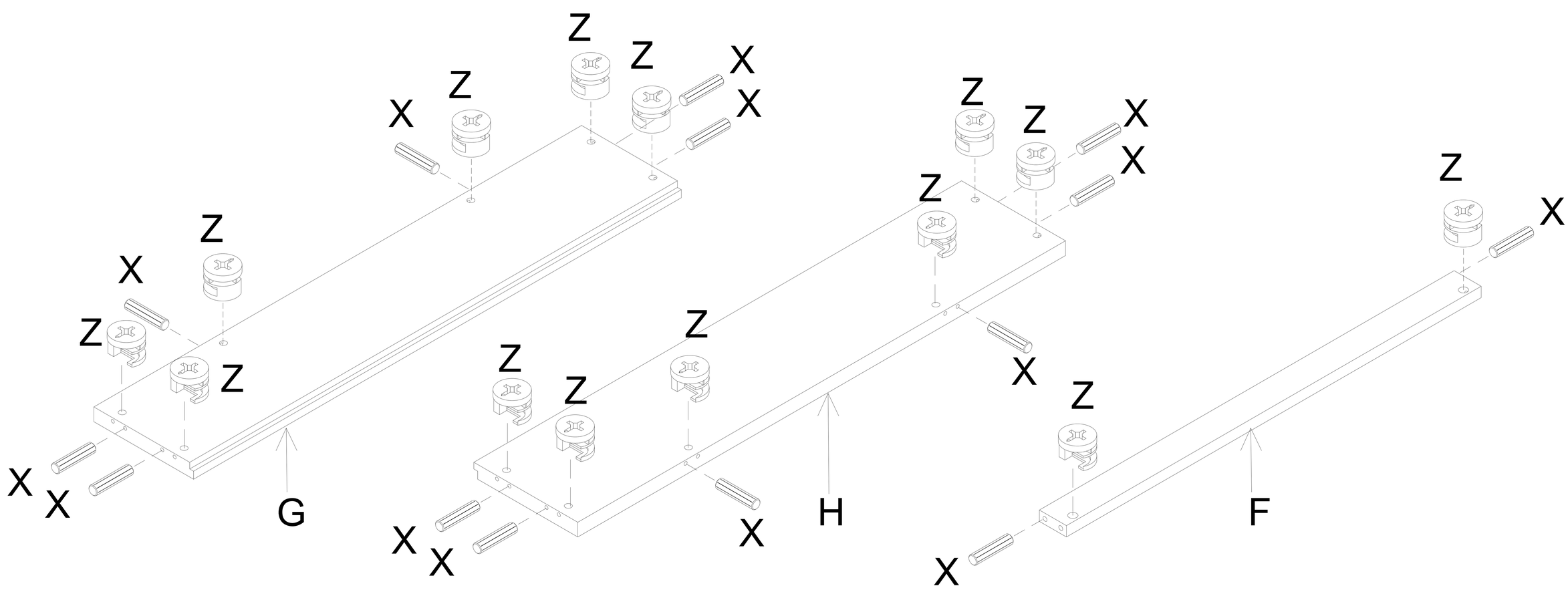

9 Attach the Center Bar (F) to both sides of the Partition (E) and secure the Cam Lock (Z) with a screwdriver (not provided). Cover the Cam Lock (Z) with Cam Lock Cover (AA).

NOTE : - Do not over tighten the Cam Lock (Z).

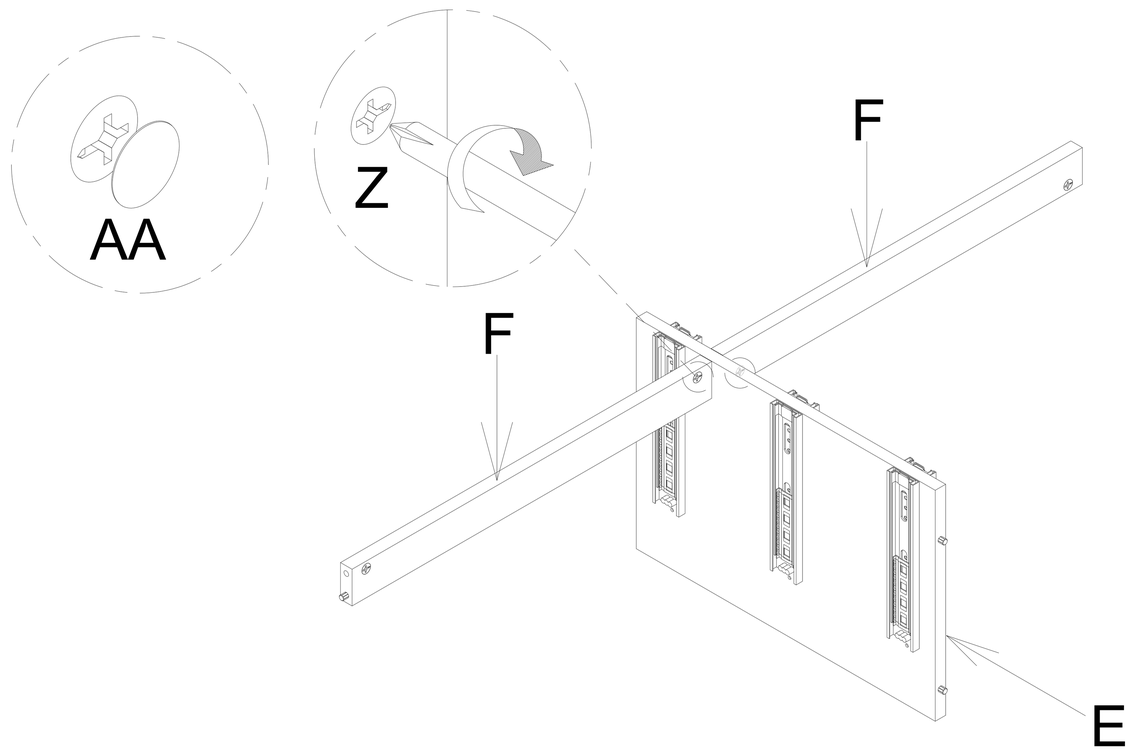

10 Attach the Left & Right Side Panel (B & C) to the Center Bar (F) and the Back Top & Bottom Panel (G & H) and secure the Cam Lock (Z) with a screwdriver (not provided). Cover the Cam Lock (Z) with Cam Lock Cover (AA).

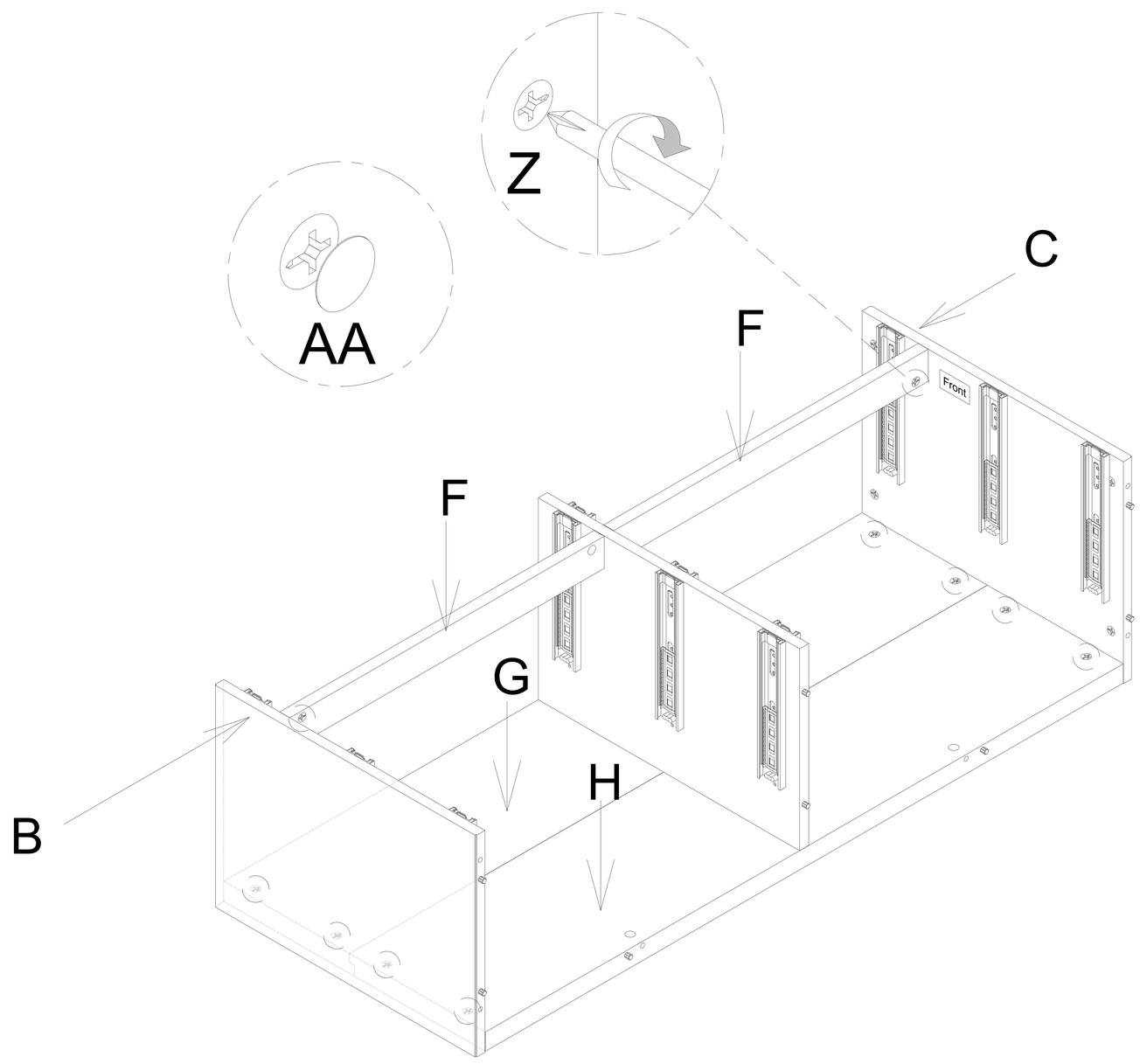

11 Attach the Bottom Frame (D) to the Left & Right Side Panel (B & C) and the Back Bottom Panel (H) and secure the Cam Lock (Z) with a screwdriver (not provided). Cover the Cam Lock (Z) with Cam Lock Cover (AA). Attach the Bottom Frame (D) to the Partition (E) using Screw (AC) with a screwdriver (not provided).

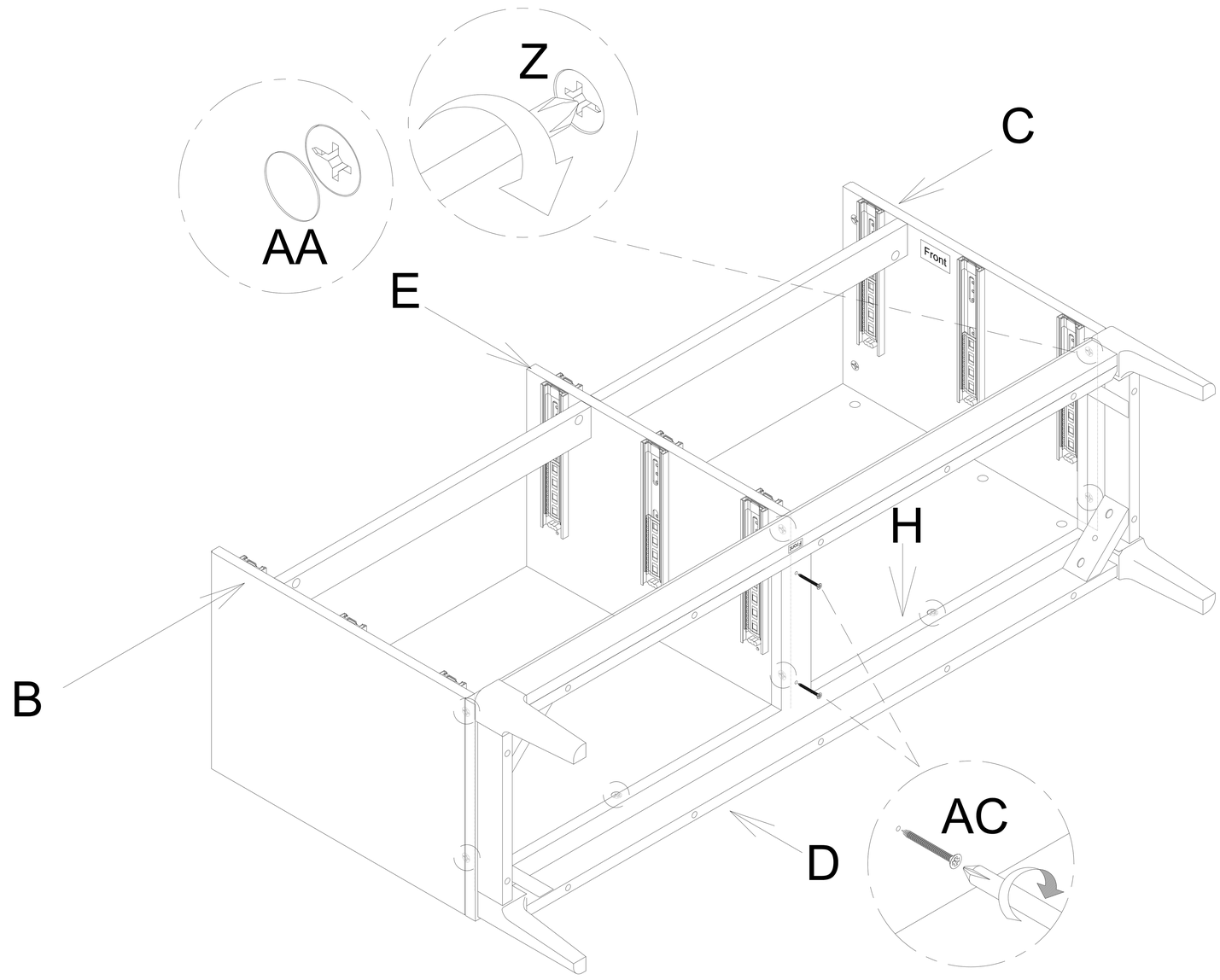

12 Attach the Top Panel (A) to the Left & Right Side Panel (B & C), the Partition (E) and the Back Top Panel (G) and secure the Cam Lock (Z) with a screwdriver (not provided). Cover the Cam Lock (Z) with Cam Lock Cover (AA).

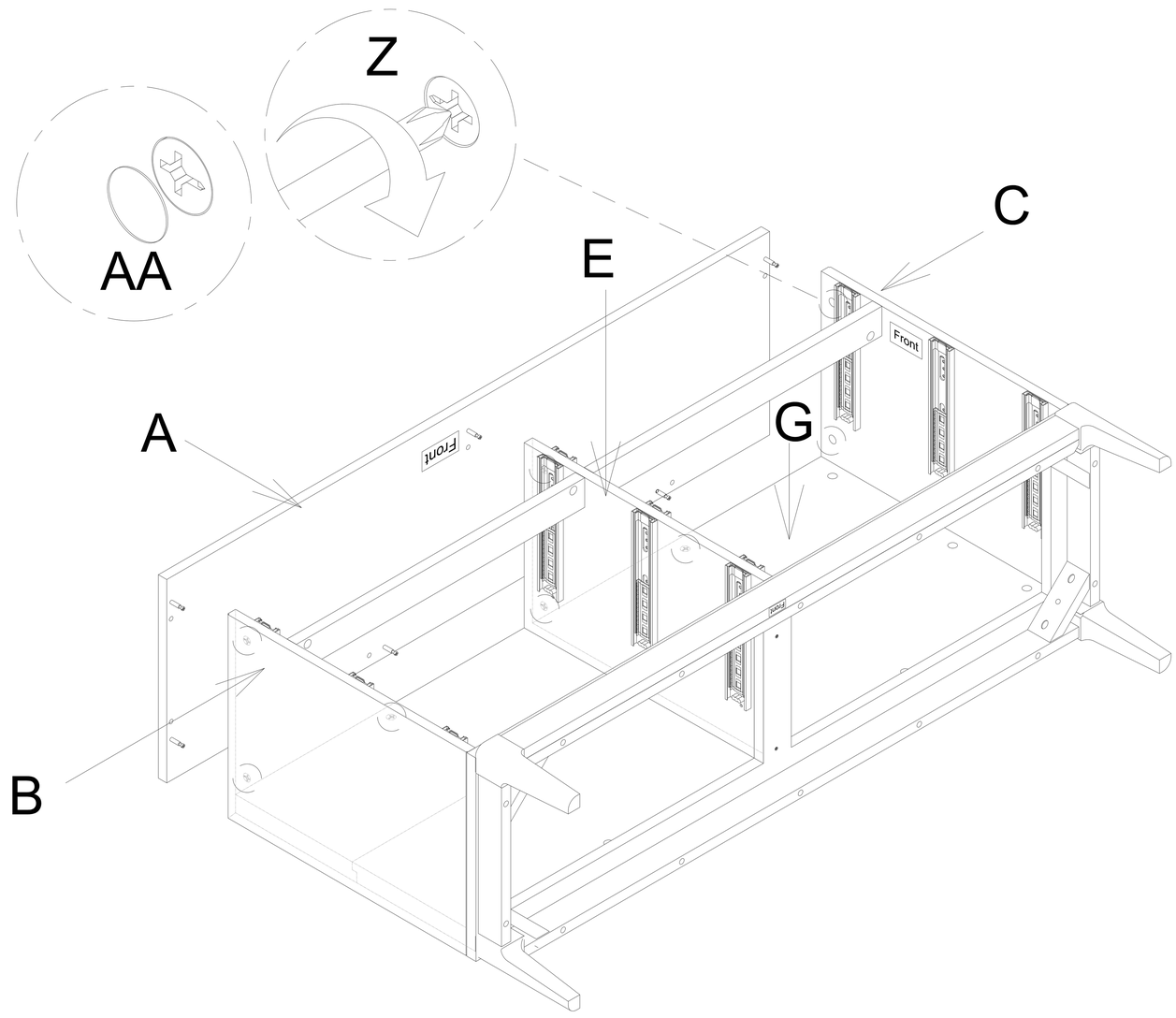

13 Attach Runner (U) to the Left & Right Small Drawer Side (J & K) using Screw (AB) with a screwdriver (not provided).

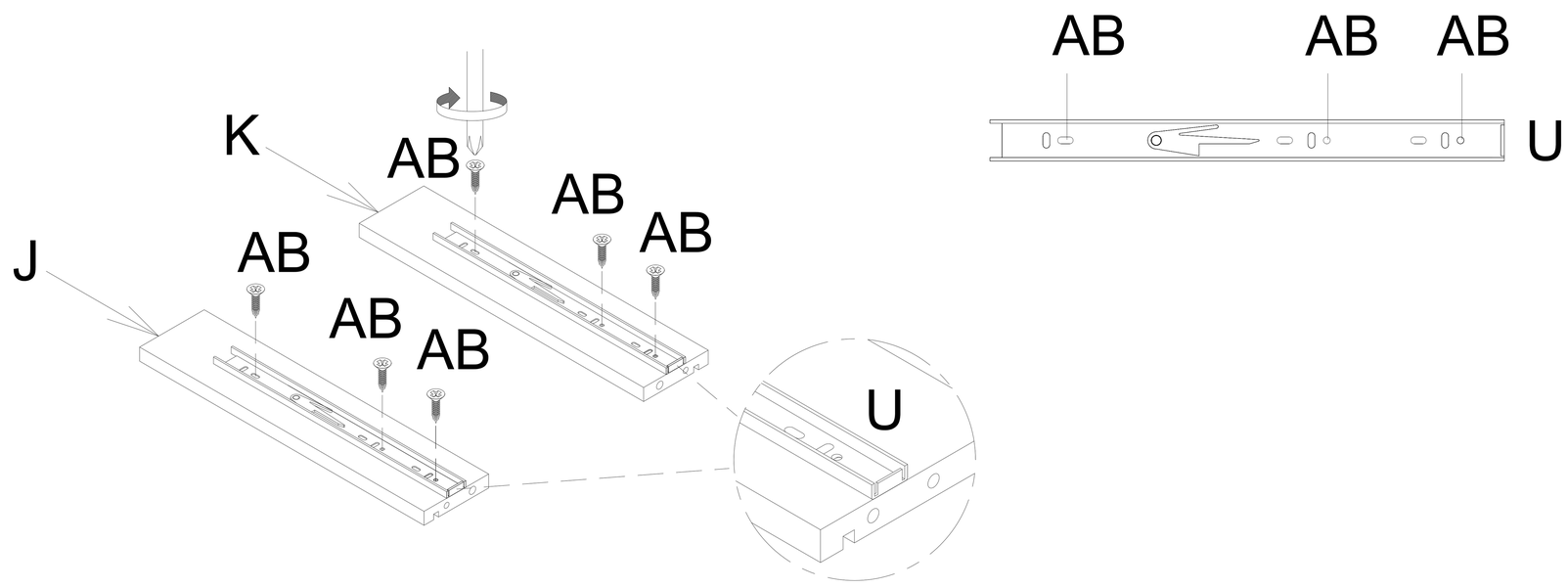

14 Attach Dowel (W) and Cam Lock (Z) to the Left & Right Small Drawer Side (J & K) and the Small Drawer Back (N). Attach Cam Bolt (Y) to the Left & Right Small Drawer Side (J & K) and the Left & Right Small Drawer Front (L & M) with a screwdriver (not provided).

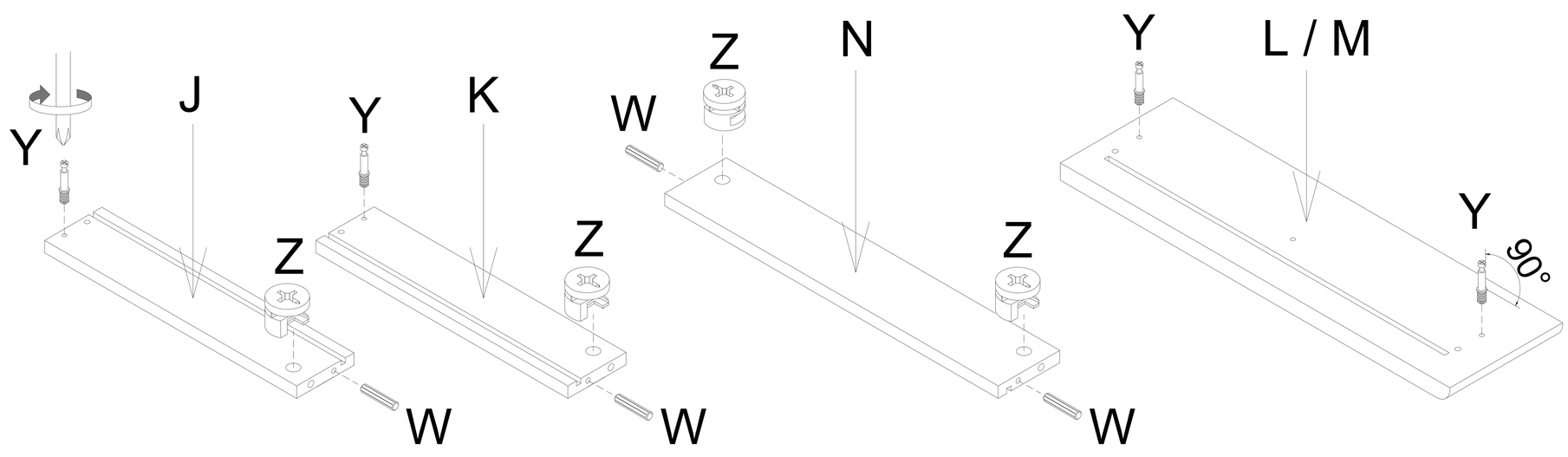

15 Attach the Left & Right Small Drawer Side (J & K) to the Small Drawer Back (N) and secure the Cam Lock (Z) with a screwdriver (not provided). Cover the Cam Lock (Z) with Cam Lock Cover (AA).

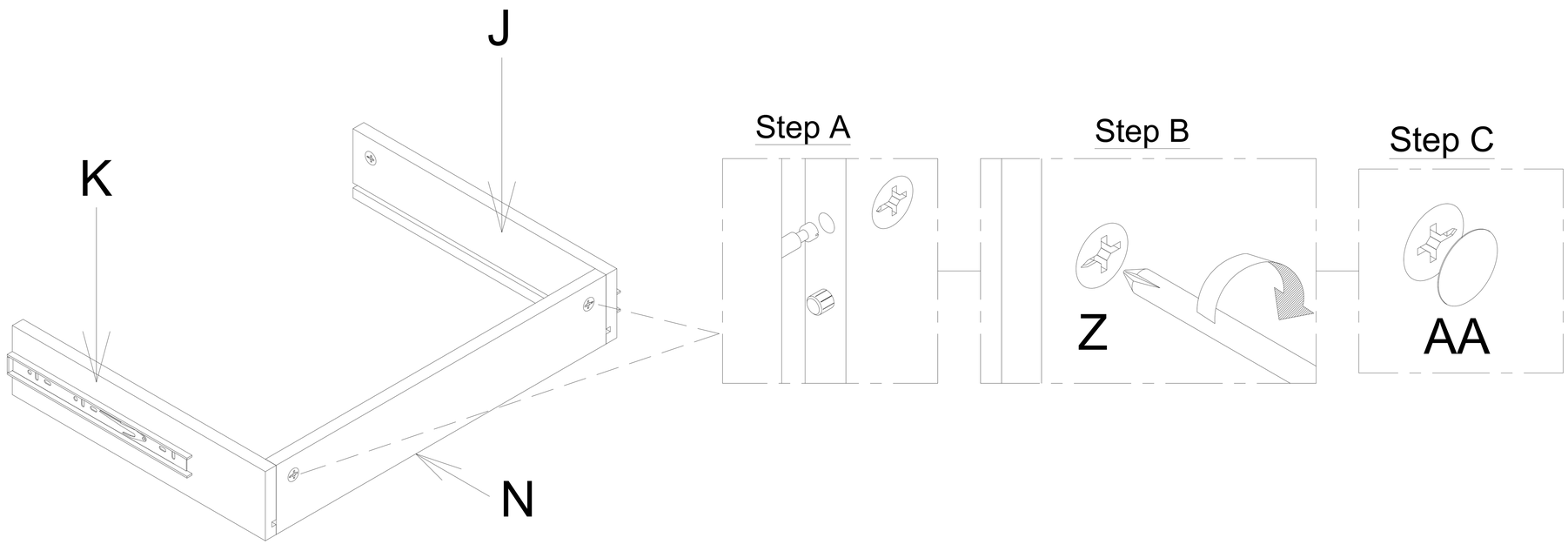

16 Slot the Drawer Base (T) into the grooves of the drawer box. Attach the Left & Right Small Drawer Front (L & M) to the drawer box and secure the Cam Lock (Z) with a screwdriver (not provided). Cover the Cam Lock (Z) with Cam Lock Cover (AA).

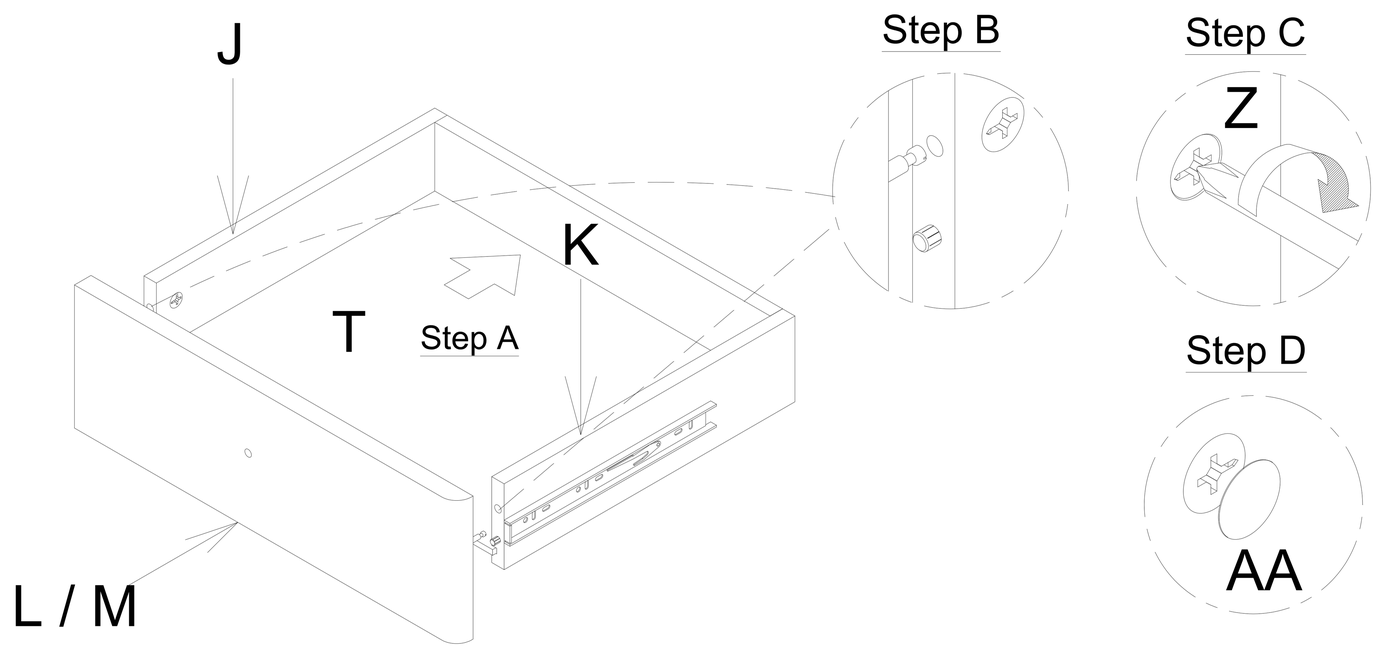

17 Attach the Handle (V) to the Left & Right Small Drawer Front (L & M) using Panhead Screw (AD) with a screwdriver (not provided).

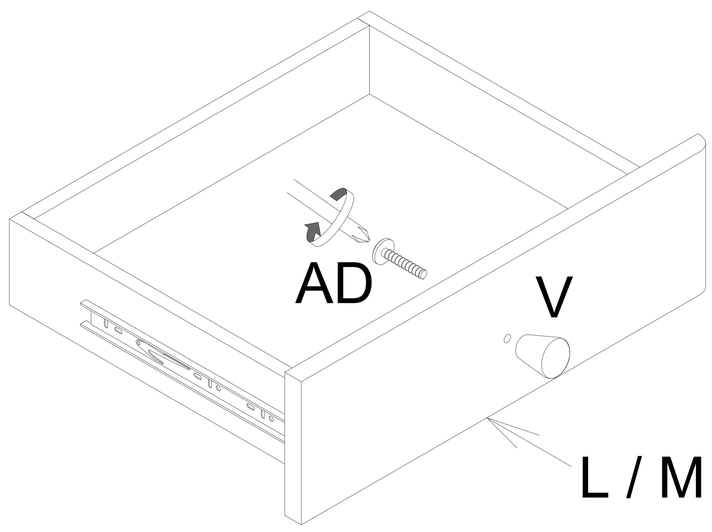

18 Attach Runner (U) to the Left & Right Big Drawer Side (O & P) using Screw (AB) with a screwdriver (not provided).

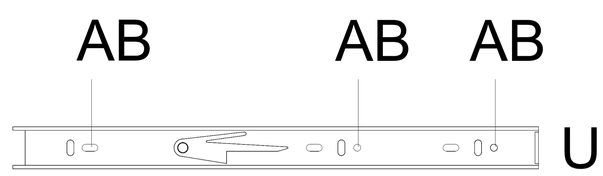

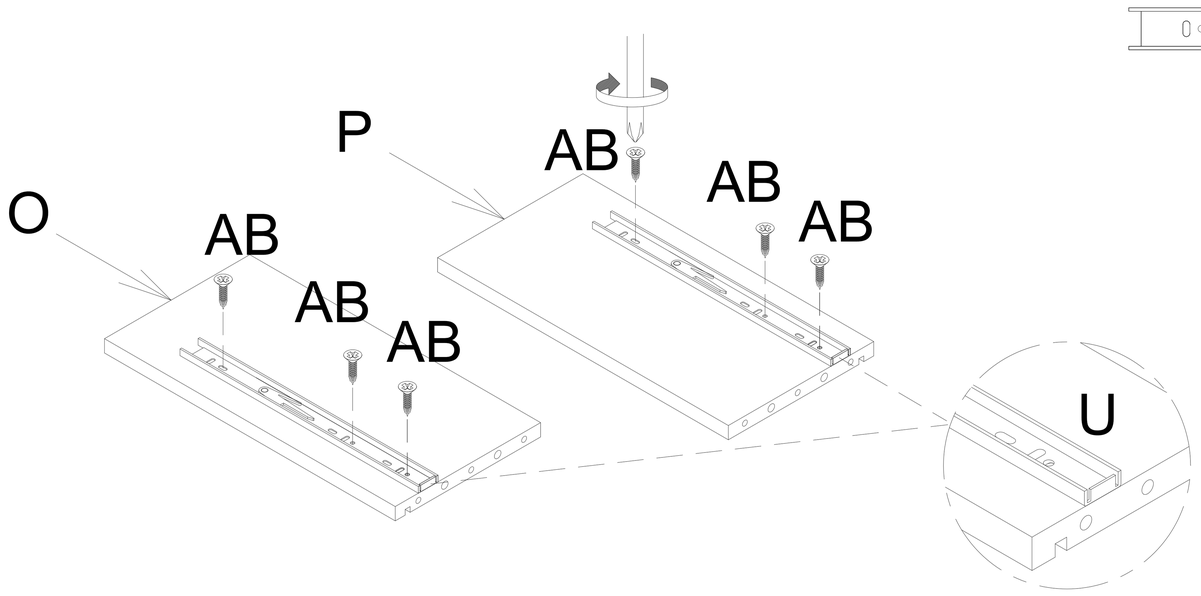

19 Attach Dowel (W) and Cam Lock (Z) to the Left & Right Big Drawer Side (O & P) and the Big Drawer Back (S). Attach Cam Bolt (Y) to the Left & Right Big Drawer Side (O & P) and the Left & Right Big Drawer Front (Q & R) with a screwdriver (not provided).

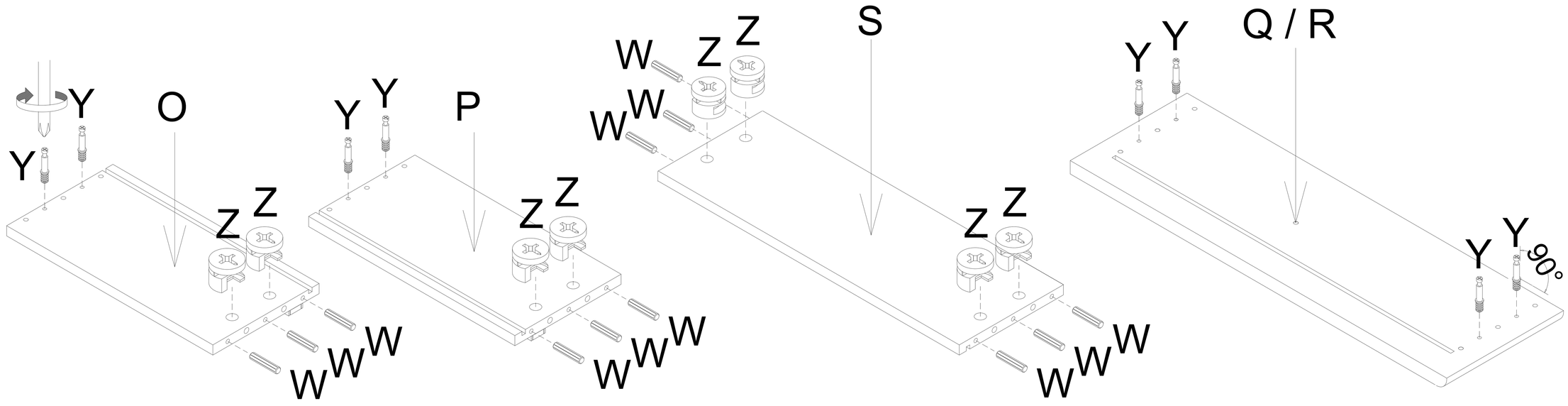

20 Attach the Left & Right Big Drawer Side (O & P) to the Big Drawer Back (S) and secure the Cam Lock (Z) with a screwdriver (not provided). Cover the Cam Lock (Z) with Cam Lock Cover (AA).

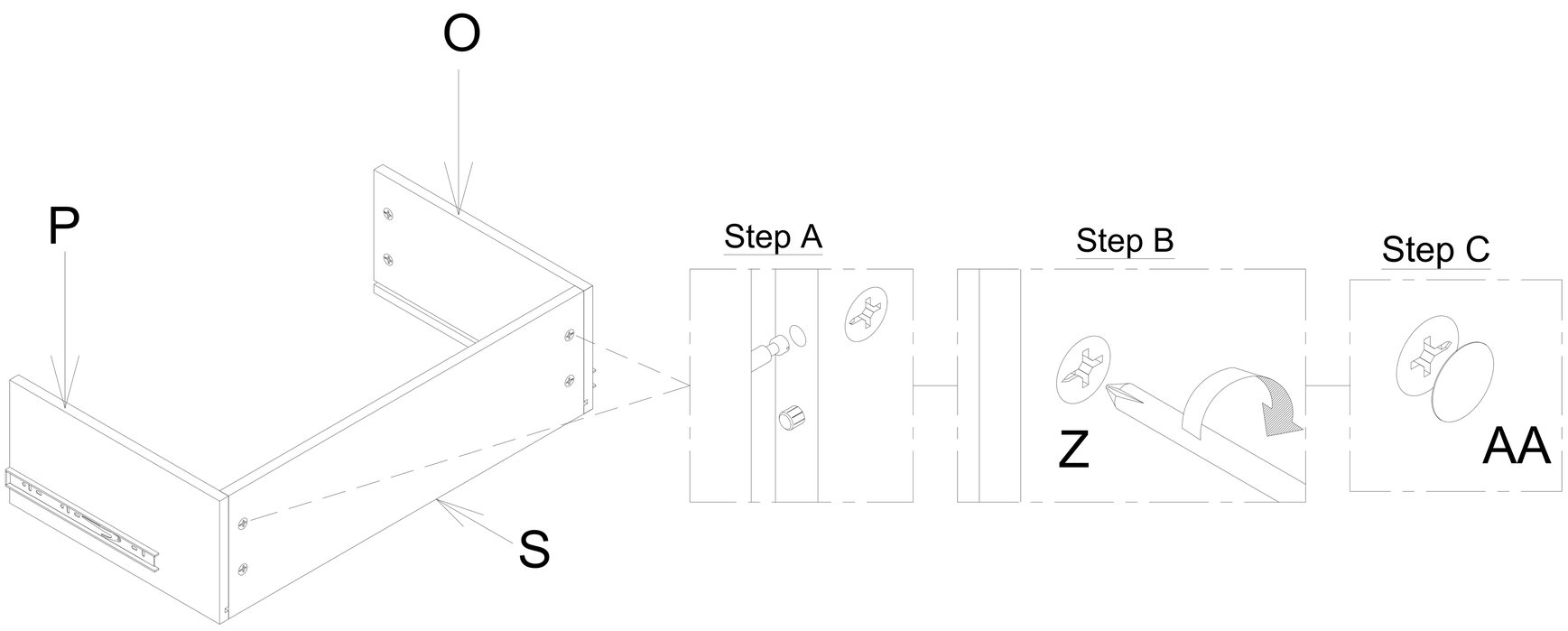

21 Slot the Drawer Base (T) into the grooves of the drawer box. Attach the Left & Right Big Drawer Front (Q & R) to the drawer box and secure the Cam Lock (Z) with a screwdriver (not provided). Cover the Cam Lock (Z) with Cam Lock Cover (AA).

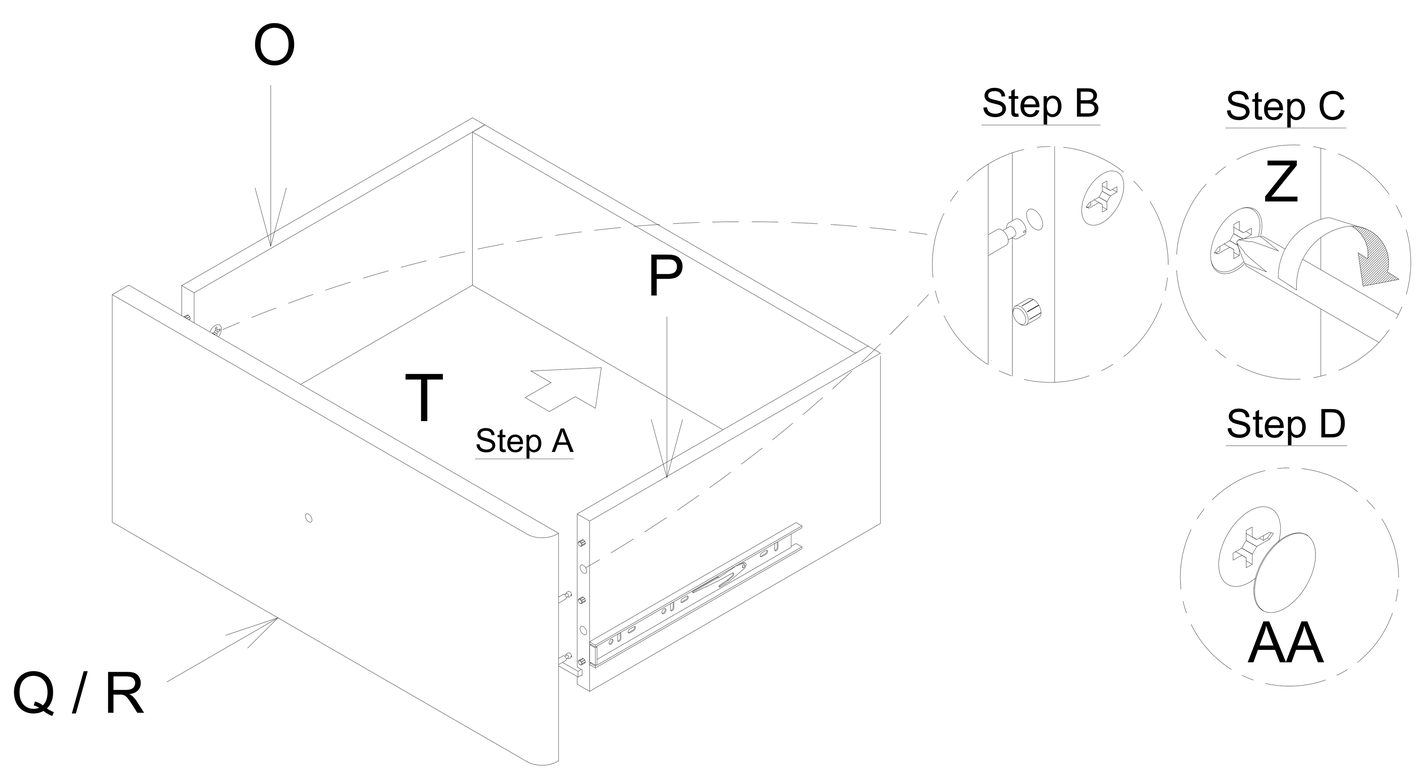

22 Attach the Handle (V) to the Left & Right Big Drawer Front (Q & R) using Panhead Screw (AD) with a screwdriver (not provided).

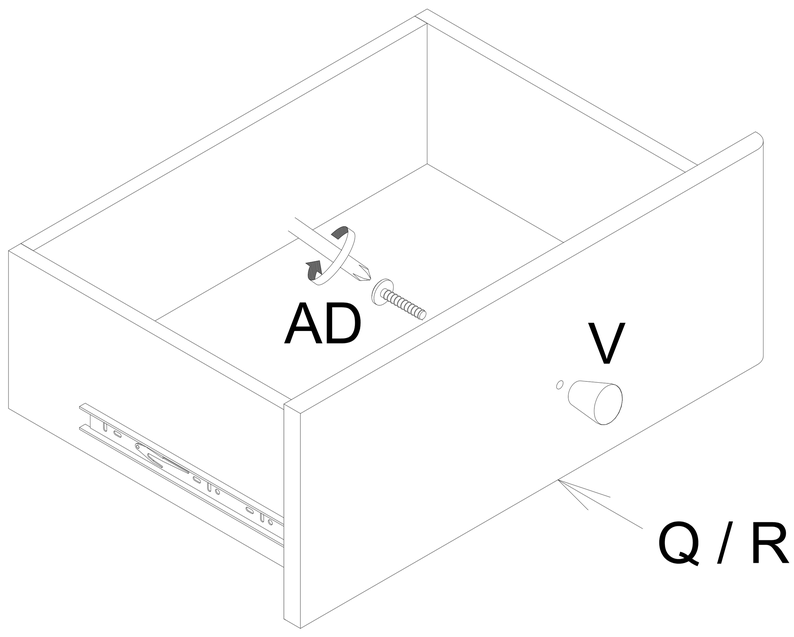

23 Pull out the metal chrome plates from both sides of the Runner (U). Align the metal chrome plates with the slides on one drawer side, then repeat on the other side. If they are not aligned properly, remove and try again. Once both tracks are aligned properly, slowly push the drawer all the way in.

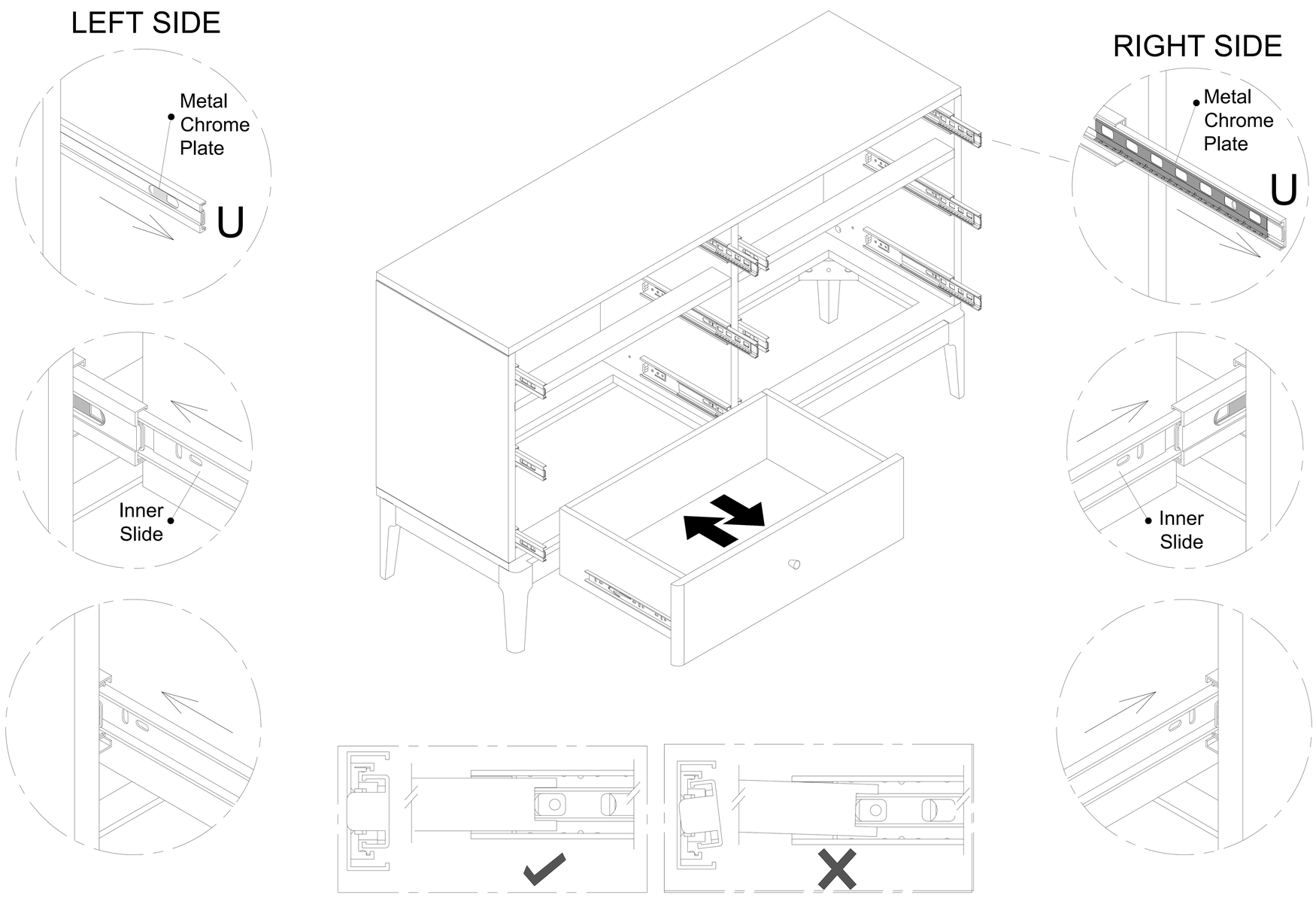

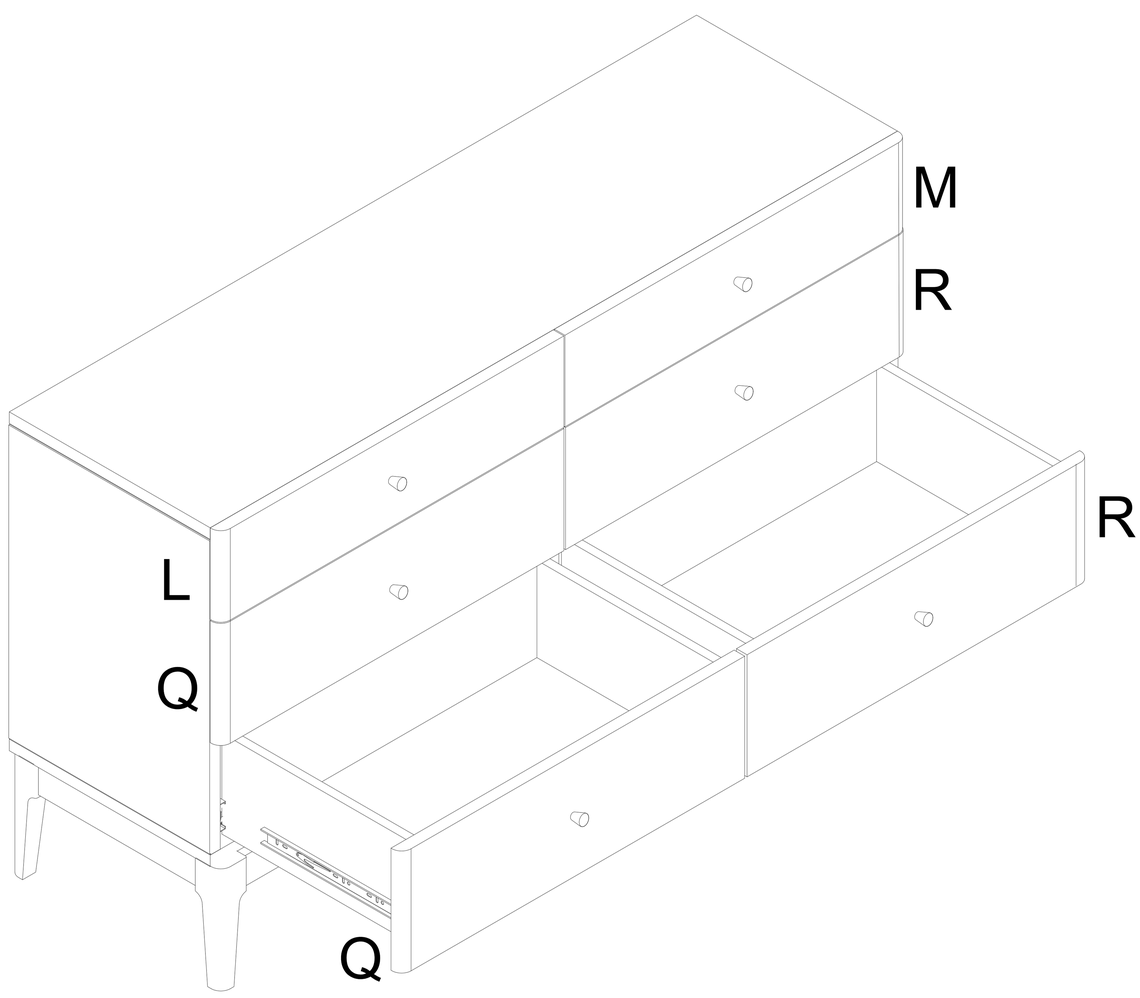

24 Attach the Anti-Tip Kit (AI) to the wall. Mount the bracket vertically to wall using the long screw. Then, secure the bracket vertically to the furniture back below the top using the short screw. Place the bracket as close to the center of the furniture back as possible, considering the wall stud and desired position in the room. Move furniture to its final position. Thread the bracket and pull it tight.

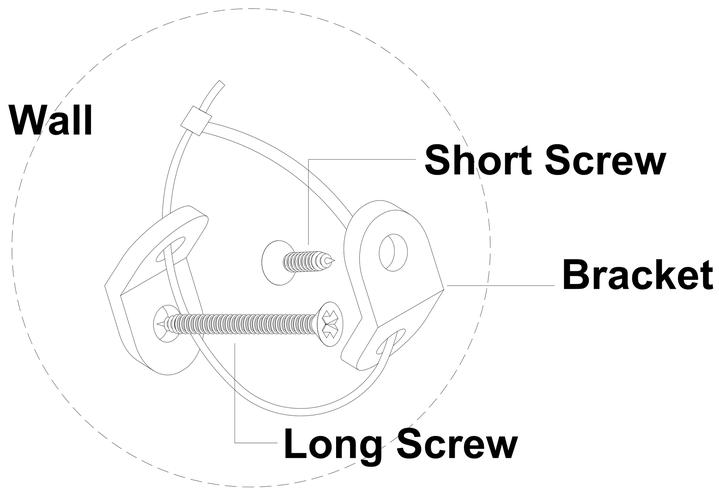

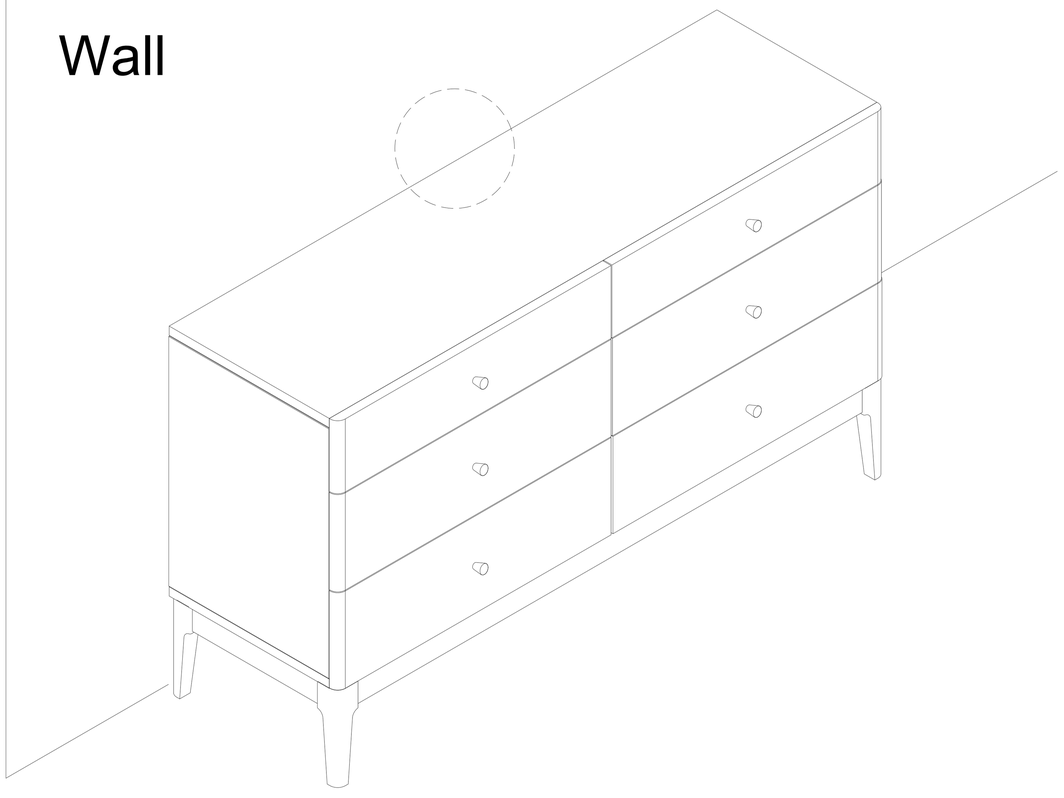

Cleaning & Care

Treat surfaces with care. Surfaces are resistant to scratches but are not scratch resistant. Clean surfaces with a dry or damp soft cloth. Do not use abrasive cleaners. Hardware may loosen over time. Periodically check that all connections are tight.