KINGSTON

Pull-Out & Pull-Down Sprayer
Installation Instructions

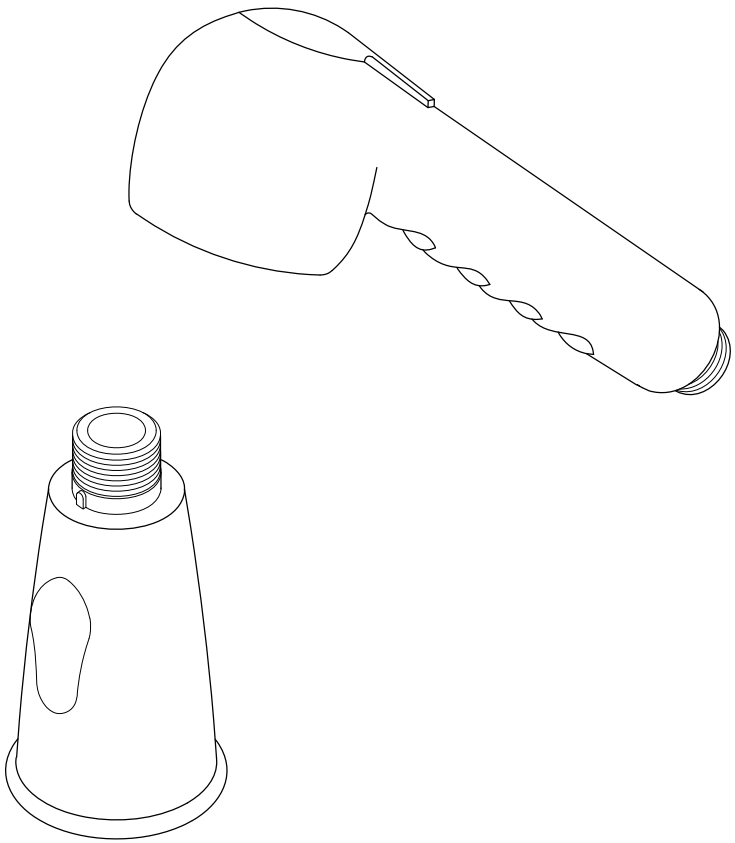

NOTICE

Failure to follow all directions may cause leaks which may result in water damage

www.kingstonbrass.com

TOLL-FREE CUSTOMER SERVICE: 1-877-2-KBRASS
TECHNICAL SUPPORT E-mail: service@kingstonbrass.com
12775 Reservoir Street, Chino, CA 91710

Note:

The sprayer fits only hose adapters with a 1/2 NPSM inner thread (1/2 IPS straight female thread).

Installation Steps:

1. Remove the old sprayer head from the spray hose adapter by turning it counter-clockwise. Clean any debris from the adapter and flush the hose with water. Check for a rubber washer; if it's broken or deformed, replace it and ensure it sits properly in the adapter.
2. Install the new sprayer head by threading it clockwise onto the adapter. Tighten it by hand, but do not over-tighten, as this can cause damage and leaks.
3. Turn on the water for at least 1 minute to check for leaks. If any leaks are found, loosen the sprayer head, clean out debris, and reassemble the O-ring and rubber washer before re-tightening.
4. Turn on the water and press the flow-pattern button on the sprayer head to ensure the flow pattern.

Sprayer without O-ring

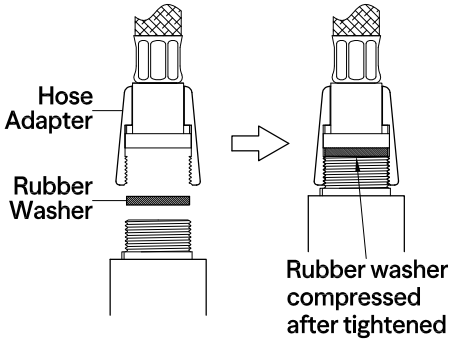

Sprayer with O-ring

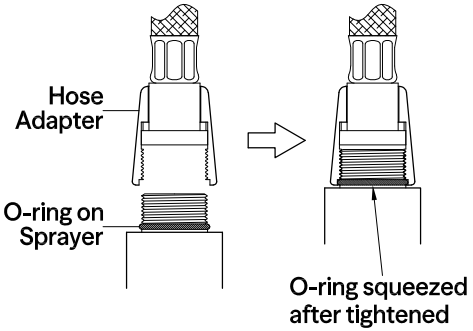

Pull-Out

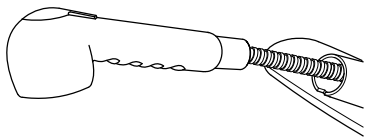

Pull-Down

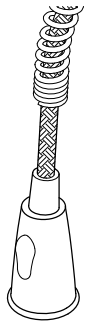

©2025 LVC Kingston LLC. All Rights Reserved.
2025-05-TD