Reverse Osmosis User's Manual

Model

AT-500, AT-1000

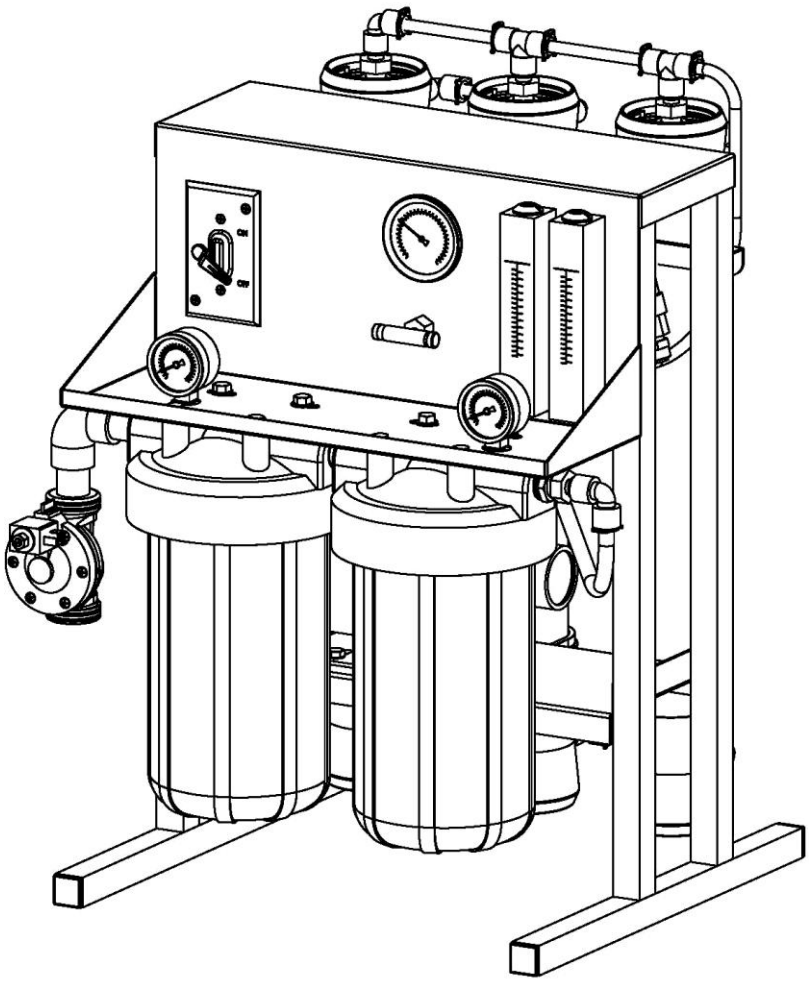

AT-1000 Pictured

THIS PAGE
LEFT BLANK

© 2011 AXEON Water Technologies

Table of Contents

INTRODUCTION 4
SAFETY 4
FEED WATER & OPERATION SPECIFICATIONS 5
REJECTION, RECOVERY, & FLOW RATES 5
SYSTEM REQUIREMENTS & OPERATION GUIDELINES 6
MEMBRANE ELEMENTS 8
AT-500, AT-1000 SYSTEM IDENTIFICATION 13
AT-500 MEMBRANE FLOW DIAGRAM 17
AT-1000 MEMBRANE FLOW DIAGRAM 18
SYSTEM PURGING 19
INITIAL START-UP 20
DESIGN BASIS FOR AT-500 AND AT-1000 21
OPERATING DO's & DON'Ts 22
OPERATION & MAINTENANCE 22
MEMBRANE REMOVAL & REPLACEMENT 25
FLUSHING THE SYSTEM 28
PREPARING UNIT FOR STORAGE OR SHIPMENT 28
REVERSE OSMOSIS TROUBLESHOOTING 30
TEMPERATURE CORRECTION FACTORS FOR MEMBRANE 32
OPERATION 34
DRAWINGS 35

© 2011 AXEON Water Technologies

INTRODUCTION

Your AT-Series system is a durable piece of equipment which, with proper care, will last for many years. This User's Manual outlines installation, operation, maintenance, and troubleshooting details vital to the sustained performance of your system.

The test results which are included with this User's Manual indicate your system's permeate (product) and concentrate (waste) test results.

If your system is altered at the site of operation or if the feed water conditions change, please contact your local dealer or distributor to determine the proper recovery for your application.

NOTE: IN ORDER TO MAINTAIN THE MANUFACTURER'S WARRANTY, AN OPERATING LOG MUST BE MAINTAINED AND COPIES WILL NEED TO BE SENT TO YOUR LOCAL DEALER OR DISTRIBUTOR FOR REVIEW.

NOTE: PRIOR TO OPERATING OR SERVICING THE REVERSE OSMOSIS SYSTEM, THIS USER'S MANUAL MUST BE READ AND FULLY UNDERSTOOD. KEEP THIS AND OTHER ASSOCIATED INFORMATION FOR FUTURE REFERENCE AND FOR NEW OPERATORS OR QUALIFIED PERSONNEL NEAR THE SYSTEM.

SAFETY

The Safety section of this User's Manual outlines the various safety headings used throughout this manual's text and are enhanced and defined below:

NOTE: INDICATES STATEMENTS THAT PROVIDE FURTHER INFORMATION AND CLARIFICATION.

CAUTION: INDICATES STATEMENTS THAT ARE USED TO IDENTIFY CONDITIONS OR PRACTICES THAT COULD RESULT IN EQUIPMENT OR OTHER PROPERTY DAMAGE.

WARNING: INDICATES STATEMENTS THAT ARE USED TO IDENTIFY CONDITIONS OR PRACTICES THAT COULD RESULT IN INJURY OR LOSS OF LIFE. FAILURE TO FOLLOW WARNINGS COULD RESULT IN SERIOUS INJURY OR EVEN DEATH.

© 2011 AXEON Water Technologies

DO NOT UNDER ANY CIRCUMSTANCE; REMOVE ANY CAUTION, WARNING, OR OTHER DESCRIPTIVE LABELS FROM THE SYSTEM.

FEED WATER & OPERATION SPECIFICATIONS

Nothing has a greater effect on a reverse osmosis system than the feed water quality.

NOTE: IT IS VERY IMPORTANT TO MEET THE MINIMUM FEED WATER REQUIREMENTS. FAILURE TO DO SO WILL CAUSE THE MEMBRANES TO FOUL AND VOID THE MANUFACTURER'S WARRANTY.

OPERATING LIMITS

Maximum Feed Temperature °F (°C)	105 (40.96)	Maximum Free Chlorine ppm	0
Minimum Feed Temperature °F (°C)	40 (4.44)	Maximum TDS ppm	2000
Maximum Ambient Temperature °F (°C)	120 (48.89)	Maximum Hardness gpg	15
Minimum Ambient Temperature °F (°C)	35 (1.66)	Maximum pH (Continuous)	11
Maximum Feed Pressure psi (bar)	85 (5.86)	Minimum pH (Continuous)	3
Minimum Feed Pressure psi (bar)	35 (2.41)	Maximum pH (Cleaning 30 Min.)	12
Maximum Operating Pressure psi (bar)	150 (10.34)	Minimum pH (Cleaning 30 Min.)	2
Maximum SDI Rating SDI	<3		
Maximum Turbidity NTU	1		

Test Parameters: 550 TDS Filtered (5 Micron), De-Chlorinated, Softened City Feed Water, 35 psi (2.41 bar) Feed Pressure, 150 psi (10.34 bar) (HF1 Membranes) 100 psi (6.89 bar) (HF4 Membranes) or 70 psi (4.83 bar) (NF3 & NF4 Membranes) Operating Pressure, 77 Degrees F (25 Degrees C), Recovery as stated, 7.0 pH. Data taken after 30 minutes of operation.

Low temperatures and high feed water TDS levels will significantly affect system's production capabilities. Computer projections should be run for individual applications which do not meet or exceed minimum and maximum operating limits.

NOTE: HIGHER TDS AND/OR LOWER TEMPERATURES WILL REDUCE THE SYSTEM'S PRODUCTION.

REJECTION, RECOVERY, & FLOW RATES

AT-Series reverse osmosis systems are designed to produce permeate water at the capacities indicated by the suffix in the system's name under the conditions listed above. For example, the AT-500 produces 500 gallons per day of permeate water at the listed operating test conditions.

The amount of total dissolved solids (TDS) rejected by the membrane is expressed as a percentage. For example, a 98.5% rejection rate means that 98.5% of total dissolved solids do not pass through the membrane. To calculate the % rejection, use the following formula:

© 2011 AXEON Water Technologies

% Rejection = [(Feed TDS – Product TDS) / Feed TDS] x 100

Example:

98.5% = [(550-8.25)/550] x 100

NOTE: ALL TDS FIGURES MUST BE EXPRESSED IN THE SAME UNITS, TYPICALLY PARTS PER MILLION (PPM) OR MILLIGRAMS PER LITER (MG/L).

AT-Series reverse osmosis systems are designed to reject up to 98.5% NaCl, unless computer projections have been provided or stated otherwise.

The amount of permeate water recovered for use is expressed as a percentage. To calculate % recovery, use the following formula:

% Recovery = (Product Water Flow Rate / Feed Water Flow Rate) x 100

Example:

23% = (0.35/1.50) x 100

NOTE: ALL FLOW RATES MUST BE EXPRESSED IN THE SAME UNITS, TYPICALLY GALLONS PER MINUTE (GPM).

SYSTEM REQUIREMENTS & OPERATION GUIDELINES

PLUMBING

The membranes and high pressure pumps used on AT-Series systems require a continuous flow of water with a minimum feed pressure of 35 psi, not to exceed 105°F.

FEED WATER CONNECTION

1. Locate the 1” FNPT Solenoid Valve feed water inlet.
(Figure 1A, Page 12)

2. Attach the inlet piping to the 1” FNPT Solenoid Valve feed water inlet.

3. Be certain that all of the components of the feed water are soluble at the concentrations attained in the system.

NOTE: FEED LINE MUST BE MINIMUM 1/2” INCH.

© 2011 AXEON Water Technologies

PERMEATE (PRODUCT WATER) CONNECTION

Locate the 3/8” tubing labeled permeate and attach to storage tank. Ensure that the permeate water can flow freely with no backpressure. Backpressure can cause irreversible damage to the membrane elements. The 3/8” permeate line can be run to the holding tank with PVC fittings, or other FDA approved materials. This is so the material being used does not dissolve into the permeate water.

CAUTION THE PH OF THE REVERSE OSMOSIS PERMEATE WATER WILL TYPICALLY BE 1-2 POINTS LOWER THAN THE FEED WATER PH. A LOW PH CAN BE VERY AGGRESSIVE TO SOME PLUMBING MATERIALS SUCH AS COPPER PIPING.

CONCENTRATE (WASTE WATER) CONNECTION

Locate the 3/8” tubing labeled concentrate and attach the tubing to a drain. Run the concentrate line to an open drain in a free and unrestricted manner (no backpressure).

CAUTION: ANY RESTRICTIONS OR BLOCKAGE IN THE DRAIN LINE CAN CAUSE BACKPRESSURE, WHICH WILL INCREASE THE SYSTEM’S OPERATING PRESSURE. THIS CAN RESULT IN DAMAGE TO THE SYSTEM’S MEMBRANES AND COMPONENTS.

ELECTRICAL

The motor used on the AT-Series systems is a carbonator motor. The motor is available in 110/220 Volt 50/60 Hertz 1 Phase. Each AT-Series system is equipped with a 5 foot electrical cord. 110V models are equipped with a plug.

Ensure that the electrical circuit supplying the system is compatible with the requirements of the specific AT model you are installing.

© 2011 AXEON Water Technologies

NOTE: IT'S RECOMMENDED THAT A LICENSED ELECTRICIAN WIRE YOUR SYSTEM IN ACCORDANCE WITH LOCAL AND NATIONAL ELECTRICAL CODES (NEC).

WARNING: TO REDUCE THE RISK OF ELECTRICAL SHOCK, THE INCOMING POWER SUPPLY MUST INCLUDE A PROTECTIVE EARTH GROUND.

AT-Series systems are typically controlled with a liquid level switch in a storage tank. The liquid level switch turns the system on when the water level in the tank drops, and off when the tank is full. Liquid level switches can be obtained by your local dealer or distributor. If a liquid level switch is to be used, install it at this time.

PRE-FILTRATION

AT-Series systems are supplied with a 5 micron sediment filter and a 10 micron carbon block. Change the cartridge once a month or when a 10-15 psi differential exists between the two pre-filters. Ask your local dealer or distributor about Pre-Filtration systems, if required.

NOTE: THE SYSTEM MUST BE OPERATED ON FILTERED WATER ONLY.

PUMP

The pump type used on the AT-Series systems is brass rotary vane pumps. These pumps are also available as an option in stainless steel.

If any damage occurs to your system's pump, a re-build kit may be available. Contact your local dealer or distributor and inform them of your system and pump model.

MOUNTING

The free standing system should be bolted down in compliance with local regulation standards or securely fastened.

MEMBRANE ELEMENTS

AT-Series reverse osmosis systems come pre-loaded with Thin Film Composite (TFC) HF1 High Flow Low Energy membranes, unless otherwise specified. General membrane element performance characteristics are listed on the next page.

© 2011 AXEON Water Technologies

AXEON®

HF1 Series Reverse Osmosis Membrane Elements

AXEON® HF1 Membrane Elements are one of the industries most reliable and highest performing reverse osmosis elements. AXEON® membranes are available in all standard commercial sizes and feature a protective ABS shell. Advanced membrane technology and manufacturing processes ensure high quality and performance, allowing for improved system performance. All elements are shipped dry for an extended shelf life and easier handling. Membrane elements are 100% vacuum integrity tested and may also be ordered as individually wet tested.

Operating Limits:

- Membrane Type: Polyamide Thin-Film
- Maximum Operating Temperature: 113°F (45°C)
- Maximum Operating Pressure: 600 psi (41 bar)
- Minimum Concentrate Flow Rate: 5:1
- pH Range, Continuous Operation: 2 – 11
- pH Range, Short Term Cleaning (30 Min.): 1 – 13
- Maximum Feed Water Turbidity: 1 NTU
- Maximum Feed Silt Density Index: 5 SDI
- Chlorine Tolerance: 0 ppm

Product Specifications:

Part Number	Description	Applied Pressure psi (bar)	Permeate Flow Rate gpd (m3/d)	Nominal Salt Rejection (%)
200374	HF1 – 2514	150 (10.34)	225 (0.85)	98.5
200375	HF1 – 2521	150 (10.34)	400 (1.51)	98.5
200376	HF1 – 2540	150 (10.34)	1000 (3.79)	98.5

Part Number	Description	Applied Pressure psi (bar)	Permeate Flow Rate gpd (m3/d)	Nominal Salt Rejection (%)
200377	HF1 – 4014	150 (10.34)	600 (2.27)	98.5
200378	HF1 – 4021	150 (10.34)	1000 (3.79)	98.5
200379	HF1 – 4040	150 (10.34)	2500 (9.46)	98.5

Test Parameters: 550 TDS Filtered (5 Micron), De-Chlorinated, Softened City Feed Water, 77 Degrees F, 15% Permeate Recovery, 6.5 - 7.0 pH Range, at the Specified Operating Pressure. Data Taken After 30 Minutes of Operation. Maximum Pressure drop for each element is 10 psi. Minimum salt rejection is 96%. Permeate flow for individual elements may vary +/- 20%.

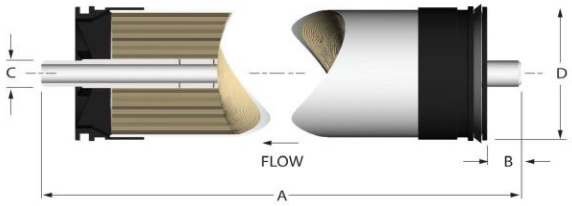

Dimensions inch (mm):

Description	A	B	C	D
HF1 – 2514	14 (355.6)	1.1 (27.94)	0.75 (19.05)	2.4 (60.96)
HF1 – 2521	21 (533.4)	1.1 (27.94)	0.75 (19.05)	2.4 (60.96)
HF1 – 2540	40 (1016.0)	1.1 (27.94)	0.75 (19.05)	2.4 (60.96)

Description	A	B	C	D
HF1 – 4014	14 (355.6)	1.1 (27.94)	0.75 (19.05)	3.95 (100.3)
HF1 – 4021	21 (533.4)	1.1 (27.94)	0.75 (19.05)	3.95 (100.3)
HF1 – 4040	40 (1016.0)	1.1 (27.94)	0.75 (19.05)	3.95 (100.3)

Under certain conditions, the presence of free chlorine and other oxidizing agents will cause premature membrane failure. Since oxidation damage is not covered under warranty, the manufacturer recommends removing residual free chlorine by pretreatment prior to membrane exposure. Wet tested membrane elements must be kept sealed and moist when in storage. Drying out may occur and damage the membrane permanently. Prevent elements from freezing or being exposed to direct sunlight. Wet tested elements are vacuum sealed in a polyethylene bag containing 1.0% sodium meta-bisulfite and then packaged in a cardboard box. Discard the permeate for the first twenty-four hours of operation. The permeate flow (product water flow) varies with feed water temperature. For membrane warranty information, please contact the manufacturer.

The manufacturer believes the information and data contained herein to be accurate and useful. The information and data are offered in good faith, but without guarantee, as conditions and methods of use of products are beyond the manufacturer's control. The manufacturer assumes no liability for results obtained or damages incurred through the application of the presented information and data. It is the user's responsibility to determine the appropriateness of these products for the user's specific end uses.

AXEON WATER TECHNOLOGIES

P: **800.320.4074** • 760.723.5417 • W: **www.axeonwater.com**
F: 760.728.5062 • E: sales@axeonwater.com • 541 Industrial Way, Suite 1, Fallbrook, CA 92028

AXEON is a registered trademark of AXEON Water Technologies.

01/11 ©2011 AXEON Water Technologies

© 2011 AXEON Water Technologies

AXEON®

HF4 Series Reverse Osmosis Membrane Elements

AXEON® HF4 Membrane Elements are one of the industries most reliable and highest performing reverse osmosis elements. AXEON® membranes are available in all standard commercial sizes and feature a protective ABS shell. Advanced membrane technology and manufacturing processes ensure high quality and performance, allowing for improved system performance. All elements are shipped dry for an extended shelf life and easier handling. Membrane elements are 100% vacuum integrity tested and may also be ordered as individually wet tested.

Operating Limits:

- Membrane Type: Polyamide Thin-Film
- Maximum Operating Temperature: 113°F (45°C)
- Maximum Operating Pressure: 600 psi (41 bar)
- Minimum Concentrate Flow Rate: 5:1
- pH Range, Continuous Operation: 2 – 11
- pH Range, Short Term Cleaning (30 Min.): 1 – 13
- Maximum Feed Water Turbidity: 1 NTU
- Maximum Feed Silt Density Index: 5 SDI
- Chlorine Tolerance: 0 ppm

Product Specifications:

Part Number	Description	Applied Pressure psi (bar)	Permeate Flow Rate gpd (m3/d)	Nominal Salt Rejection (%)
200386	HF4 – 2514	100 (6.89)	225 (0.85)	98.5
200387	HF4 – 2521	100 (6.89)	400 (1.51)	98.5
200388	HF4 – 2540	100 (6.89)	850 (3.22)	98.5

Part Number	Description	Applied Pressure psi (bar)	Permeate Flow Rate gpd (m3/d)	Nominal Salt Rejection (%)
200389	HF4 – 4014	100 (6.89)	600 (2.27)	98.5
200390	HF4 – 4021	100 (6.89)	1000 (3.79)	98.5
200391	HF4 – 4040	100 (6.89)	2500 (9.46)	98.5

Test Parameters: 550 TDS Filtered (5 Micron), De-Chlorinated, Softened City Feed Water, 77 Degrees F, 15% Permeate Recovery, 6.5 - 7.0 pH Range, at the Specified Operating Pressure. Data Taken After 30 Minutes of Operation. Maximum Pressure drop for each element is 10 psi. Minimum salt rejection is 96%. Permeate flow for individual elements may vary +/- 20%.

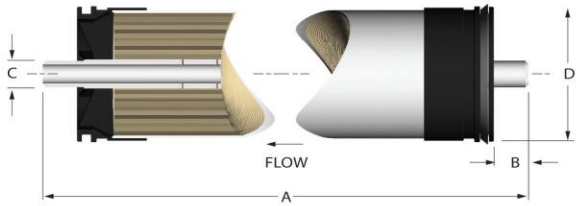

Dimensions inch (mm):

Description	A	B	C	D
HF4 – 2514	14 (355.6)	1.1 (27.94)	0.75 (19.05)	2.4 (60.96)
HF4 – 2521	21 (533.4)	1.1 (27.94)	0.75 (19.05)	2.4 (60.96)
HF4 – 2540	40 (1016.0)	1.1 (27.94)	0.75 (19.05)	2.4 (60.96)

Description	A	B	C	D
HF4 – 4014	14 (355.6)	1.1 (27.94)	0.75 (19.05)	3.95 (100.3)
HF4 – 4021	21 (533.4)	1.1 (27.94)	0.75 (19.05)	3.95 (100.3)
HF4 – 4040	40 (1016.0)	1.1 (27.94)	0.75 (19.05)	3.95 (100.3)

Under certain conditions, the presence of free chlorine and other oxidizing agents will cause premature membrane failure. Since oxidation damage is not covered under warranty, the manufacturer recommends removing residual free chlorine by pretreatment prior to membrane exposure. Wet tested membrane elements must be kept sealed and moist when in storage. Drying out may occur and damage the membrane permanently. Prevent elements from freezing or being exposed to direct sunlight. Wet tested elements are vacuum sealed in a polyethylene bag containing 1.0% sodium meta-bisulfite and then packaged in a cardboard box. Discard the permeate for the first twenty-four hours of operation. The permeate flow (product water flow) varies with feed water temperature. For membrane warranty information, please contact the manufacturer.

The manufacturer believes the information and data contained herein to be accurate and useful. The information and data are offered in good faith, but without guarantee, as conditions and methods of use of products are beyond the manufacturer's control. The manufacturer assumes no liability for results obtained or damages incurred through the application of the presented information and data. It is the user's responsibility to determine the appropriateness of these products for the user's specific end uses.

AXEON WATER TECHNOLOGIES

P: **800.320.4074** • 760.723.5417 • W: **www.axeonwater.com**
F: 760.728.5062 • E: sales@axeonwater.com • 541 Industrial Way, Suite 1, Fallbrook, CA 92028

AXEON is a registered trademark of AXEON Water Technologies.

01/11 ©2011 AXEON Water Technologies

© 2011 AXEON Water Technologies

AXEON®

NF3 Series Reverse Osmosis Membrane Elements

AXEON® NF3 Membrane Elements are one of the industries most reliable and highest performing nanofiltration elements. AXEON® membranes are available in all standard commercial sizes and feature a protective ABS shell. Advanced membrane technology and manufacturing processes ensure high quality and performance, allowing for improved system performance. All elements are shipped dry for an extended shelf life and easier handling. Membrane elements are 100% vacuum integrity tested and may also be ordered as individually wet tested.

Operating Limits:

- Membrane Type: Polyamide Thin-Film
- Maximum Operating Temperature: 113°F (45°C)
- Maximum Operating Pressure: 600 psi (41 bar)
- Minimum Concentrate Flow Rate: 5:1
- pH Range, Continuous Operation: 2 – 11
- pH Range, Short Term Cleaning (30 Min.): 1 – 13
- Maximum Feed Water Turbidity: 1 NTU
- Maximum Feed Silt Density Index: 5 SDI
- Chlorine Tolerance: 0 ppm

Product Specifications:

Part Number	Description	Applied Pressure psi (bar)	Permeate Flow Rate gpd (m3/d)	Nominal Salt Rejection (%)
200401	NF3 – 2514	70 (4.83)	200 (0.76)	40 – 50
200402	NF3 – 2521	70 (4.83)	350 (1.33)	40 – 50
200403	NF3 – 2540	70 (4.83)	850 (3.22)	40 – 50

Part Number	Description	Applied Pressure psi (bar)	Permeate Flow Rate gpd (m3/d)	Nominal Salt Rejection (%)
200404	NF3 – 4014	70 (4.83)	400 (1.51)	40 – 50
200405	NF3 – 4021	70 (4.83)	1000 (3.79)	40 – 50
200406	NF3 – 4040	70 (4.83)	2500 (9.46)	40 – 50

Test Parameters: 550 TDS Filtered (5 Micron), De-Chlorinated, Softened City Feed Water, 77 Degrees F, 15% Permeate Recovery, 6.5 - 7.0 pH Range, at the Specified Operating Pressure. Data Taken After 30 Minutes of Operation. Maximum Pressure drop for each element is 10 psi. Minimum salt rejection is 96%. Permeate flow for individual elements may vary +/- 20%.

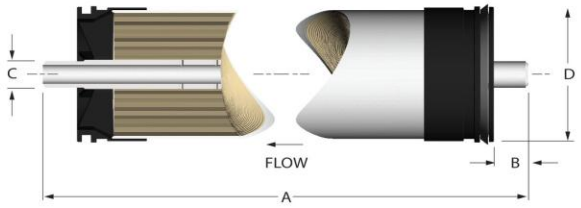

Dimensions inch (mm):

Description	A	B	C	D
NF3 – 2514	14 (355.6)	1.1 (27.94)	0.75 (19.05)	2.4 (60.96)
NF3 – 2521	21 (533.4)	1.1 (27.94)	0.75 (19.05)	2.4 (60.96)
NF3 – 2540	40 (1016.0)	1.1 (27.94)	0.75 (19.05)	2.4 (60.96)

Description	A	B	C	D
NF3 – 4014	14 (355.6)	1.1 (27.94)	0.75 (19.05)	3.95 (100.3)
NF3 – 4021	21 (533.4)	1.1 (27.94)	0.75 (19.05)	3.95 (100.3)
NF3 – 4040	40 (1016.0)	1.1 (27.94)	0.75 (19.05)	3.95 (100.3)

Under certain conditions, the presence of free chlorine and other oxidizing agents will cause premature membrane failure. Since oxidation damage is not covered under warranty, the manufacturer recommends removing residual free chlorine by pretreatment prior to membrane exposure. Wet tested membrane elements must be kept sealed and moist when in storage. Drying out may occur and damage the membrane permanently. Prevent elements from freezing or being exposed to direct sunlight. Wet tested elements are vacuum sealed in a polyethylene bag containing 1.0% sodium meta-bisulfite and then packaged in a cardboard box. Discard the permeate for the first twenty-four hours of operation. The permeate flow (product water flow) varies with feed water temperature. For membrane warranty information, please contact the manufacturer.

The manufacturer believes the information and data contained herein to be accurate and useful. The information and data are offered in good faith, but without guarantee, as conditions and methods of use of products are beyond the manufacturer's control. The manufacturer assumes no liability for results obtained or damages incurred through the application of the presented information and data. It is the user's responsibility to determine the appropriateness of these products for the user's specific end uses.

AXEON WATER TECHNOLOGIES

P: **800.320.4074** • 760.723.5417 • W: **www.axeonwater.com**
F: 760.728.5062 • E: sales@axeonwater.com • 541 Industrial Way, Suite 1, Fallbrook, CA 92028

AXEON is a registered trademark of AXEON Water Technologies.

01/11 ©2011 AXEON Water Technologies

© 2011 AXEON Water Technologies

AXEON®

NF4 Series Reverse Osmosis Membrane Elements

AXEON® NF4 Membrane Elements are one of the industries most reliable and highest performing nanofiltration elements. AXEON® membranes are available in all standard commercial sizes and feature a protective ABS shell. Advanced membrane technology and manufacturing processes ensure high quality and performance, allowing for improved system performance. All elements are shipped dry for an extended shelf life and easier handling. Membrane elements are 100% vacuum integrity tested and may also be ordered as individually wet tested.

Operating Limits:

- Membrane Type: Polyamide Thin-Film
- Maximum Operating Temperature: 113°F (45°C)
- Maximum Operating Pressure: 600 psi (41 bar)
- Minimum Concentrate Flow Rate: 5:1
- pH Range, Continuous Operation: 2 – 11
- pH Range, Short Term Cleaning (30 Min.): 1 – 13
- Maximum Feed Water Turbidity: 1 NTU
- Maximum Feed Silt Density Index: 5 SDI
- Chlorine Tolerance: 0 ppm

Product Specifications:

Part Number	Description	Applied Pressure psi (bar)	Permeate Flow Rate gpd (m3/d)	Nominal Salt Rejection (%)	$MgSO_4$ Rejection (%)
200407	NF4 – 2514	70 (4.83)	200 (0.76)	80 – 90	98
200408	NF4 – 2521	70 (4.83)	250 (0.95)	80 – 90	98
200409	NF4 – 2540	70 (4.83)	680 (2.57)	80 – 90	98

Part Number	Description	Applied Pressure psi (bar)	Permeate Flow Rate gpd (m3/d)	Nominal Salt Rejection (%)	$MgSO_4$ Rejection (%)
200410	NF4 – 4014	70 (4.83)	400 (1.51)	80 – 90	98
200411	NF4 – 4021	70 (4.83)	950 (3.60)	80 – 90	98
200412	NF4 – 4040	70 (4.83)	2000 (7.6)	80 – 90	98

Test Parameters: 550 TDS Filtered (5 Micron), De-Chlorinated, Softened City Feed Water, 77 Degrees F, 15% Permeate Recovery, 6.5 - 7.0 pH Range, at the Specified Operating Pressure. Data Taken After 30 Minutes of Operation. Maximum Pressure drop for each element is 10 psi. Minimum salt rejection is 96%. Permeate flow for individual elements may vary +/- 20%.

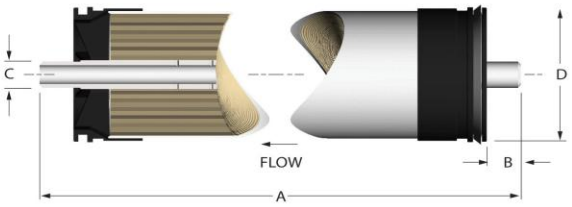

Dimensions inch (mm):

Description	A	B	C	D
NF4 – 2514	14 (355.6)	1.1 (27.94)	0.75 (19.05)	2.4 (60.96)
NF4 – 2521	21 (533.4)	1.1 (27.94)	0.75 (19.05)	2.4 (60.96)
NF4 – 2540	40 (1016.0)	1.1 (27.94)	0.75 (19.05)	2.4 (60.96)

Description	A	B	C	D
NF4 – 4014	14 (355.6)	1.1 (27.94)	0.75 (19.05)	3.95 (100.3)
NF4 – 4021	21 (533.4)	1.1 (27.94)	0.75 (19.05)	3.95 (100.3)
NF4 – 4040	40 (1016.0)	1.1 (27.94)	0.75 (19.05)	3.95 (100.3)

Under certain conditions, the presence of free chlorine and other oxidizing agents will cause premature membrane failure. Since oxidation damage is not covered under warranty, the manufacturer recommends removing residual free chlorine by pretreatment prior to membrane exposure. Wet tested membrane elements must be kept sealed and moist when in storage. Drying out may occur and damage the membrane permanently. Prevent elements from freezing or being exposed to direct sunlight. Wet tested elements are vacuum sealed in a polyethylene bag containing 1.0% sodium meta-bisulfite and then packaged in a cardboard box. Discard the permeate for the first twenty-four hours of operation. The permeate flow (product water flow) varies with feed water temperature. For membrane warranty information, please contact the manufacturer.

The manufacturer believes the information and data contained herein to be accurate and useful. The information and data are offered in good faith, but without guarantee, as conditions and methods of use of products are beyond the manufacturer's control. The manufacturer assumes no liability for results obtained or damages incurred through the application of the presented information and data. It is the user's responsibility to determine the appropriateness of these products for the user's specific end uses.

AXEON WATER TECHNOLOGIES

P: **800.320.4074** • 760.723.5417 • W: **www.axeonwater.com**
F: 760.728.5062 • E: sales@axeonwater.com • 541 Industrial Way, Suite 1, Fallbrook, CA 92028

AXEON is a registered trademark of AXEON Water Technologies.

01/11 ©2011 AXEON Water Technologies

© 2011 AXEON Water Technologies

AT-500, AT-1000 SYSTEM IDENTIFICATION

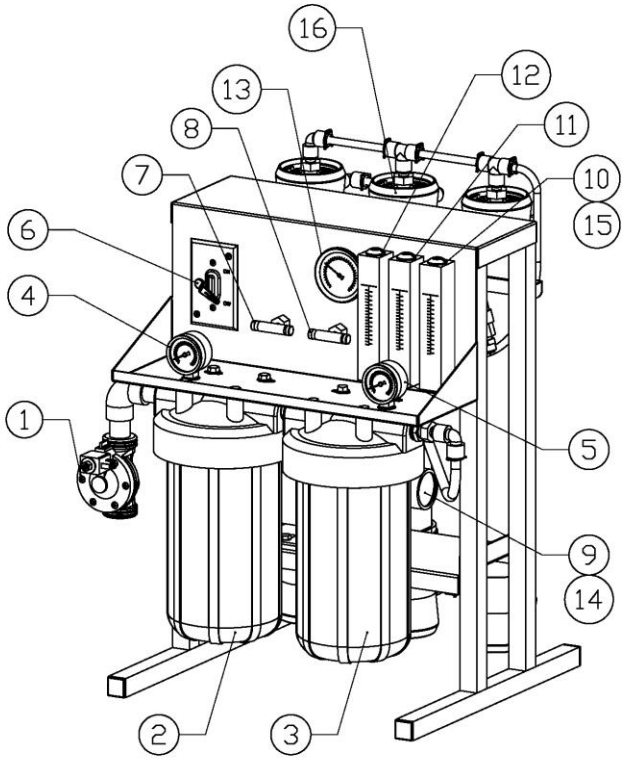

FIGURE 1A

NUMBER IDENTIFICATION

1. Solenoid Valve – Turns On/Off Feed Water
2. 5 micron Sediment – Removes particulates
3. 10 Micron Carbon Block – Chlorine reduction
4. Pressure Gauge - Measures feed pressure
5. Pressure Gauge - Measures pressure after filters
6. Control Switch - Controls RO system
7. Recycle Valve – Recycles concentrate back to feed (If Applicable)
8. Concentrate Valve – Controls flow of concentrate (waste) water to the drain
9. RO Pump - Pressurizes RO System
10. Flow Meter - Measures flow of permeate water
11. Flow Meter - Measures flow of concentrate (waste) water
12. Flow Meter - Measures flow of concentrate recycle water (If Applicable)
13. Pressure Gauge – Measures Pump discharge pressure
14. Pressure Switch – Turns the Pump off at less than 15 PSI feed pressure
15. Permeate check Valve- Protects membranes from back pressure
16. Pressure Vessels – Houses Membrane Elements

© 2011 AXEON Water Technologies

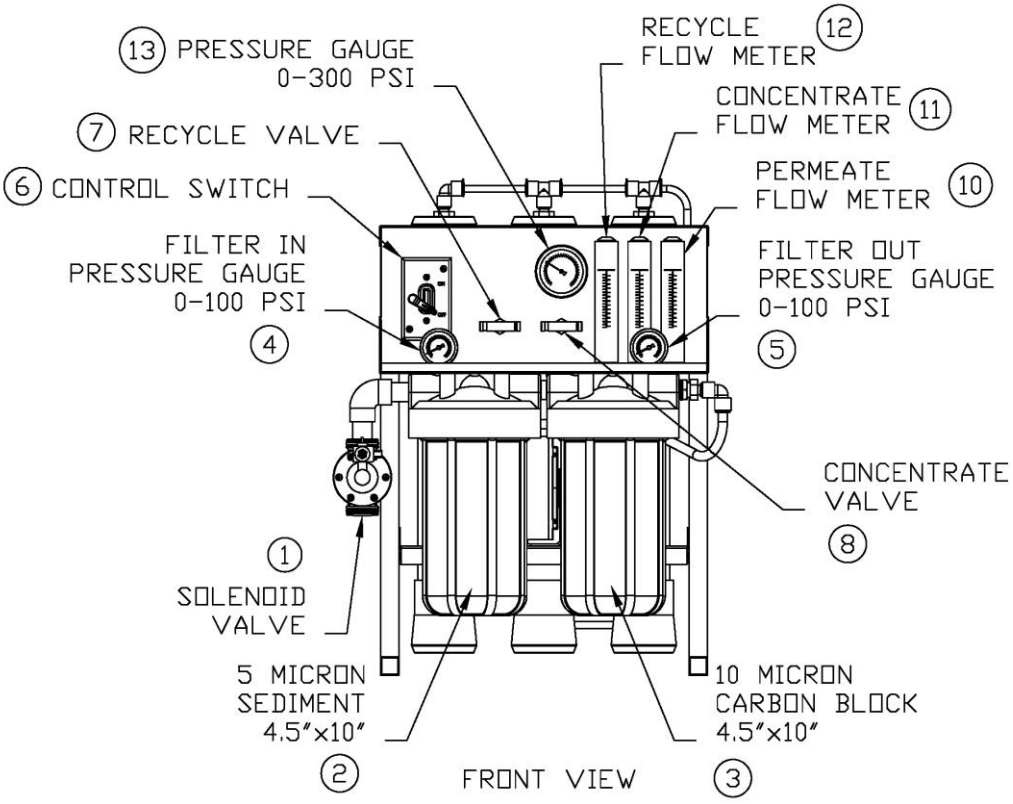

FIGURE 1B

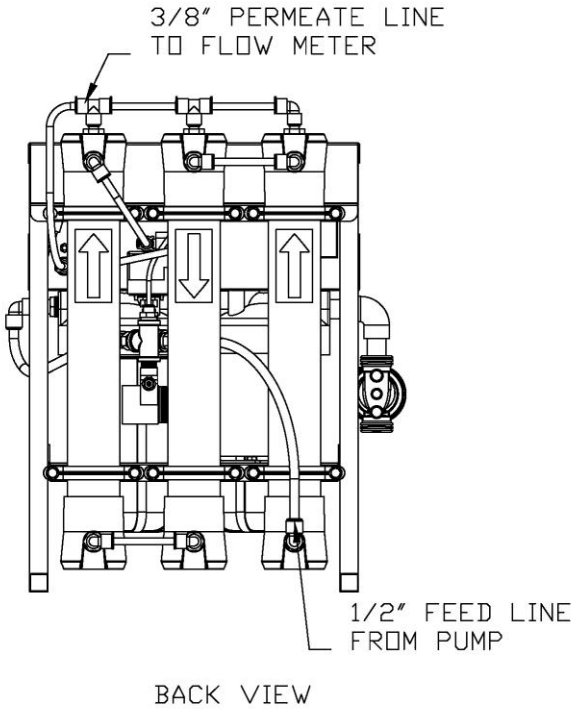

FIGURE 1C

© 2011 AXEON Water Technologies

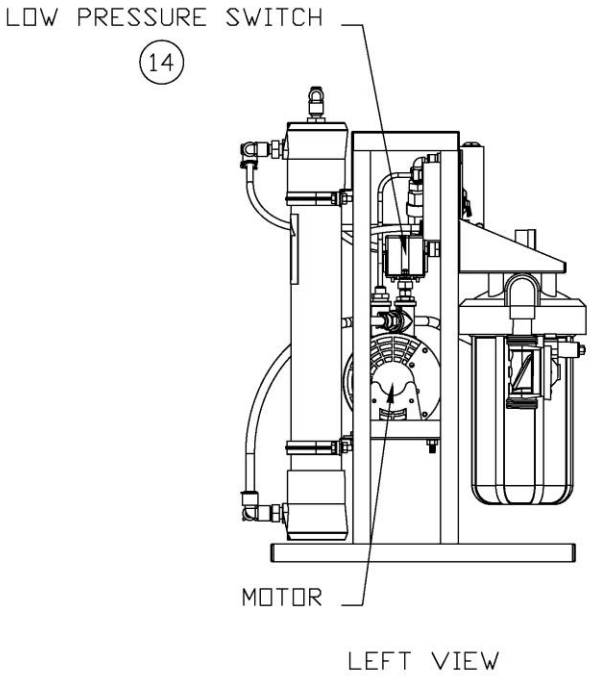

FIGURE 1D

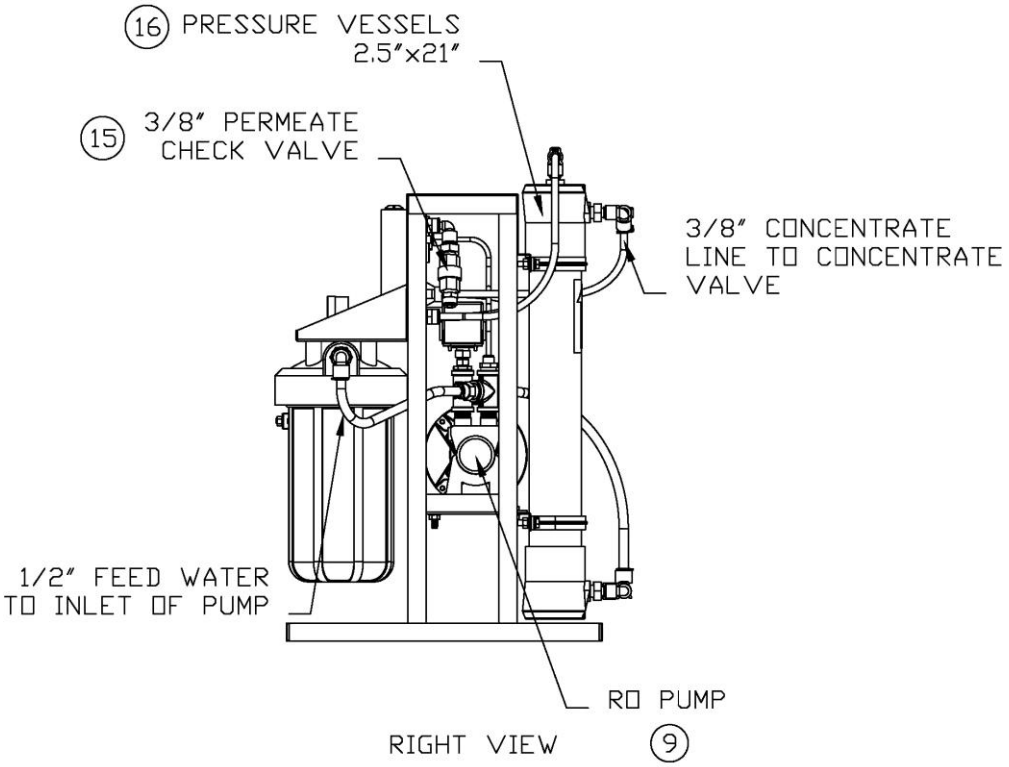

FIGURE 1E

© 2011 AXEON Water Technologies

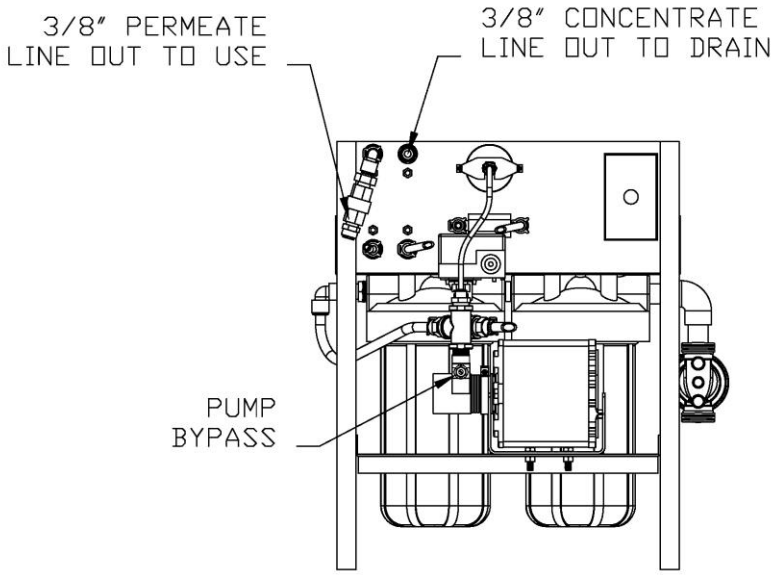

BACK CUTAWAY VIEW

FIGURE 1F

Note: A portion of the frame has been removed to expose components.

© 2011 AXEON Water Technologies

AT-500 MEMBRANE FLOW DIAGRAM

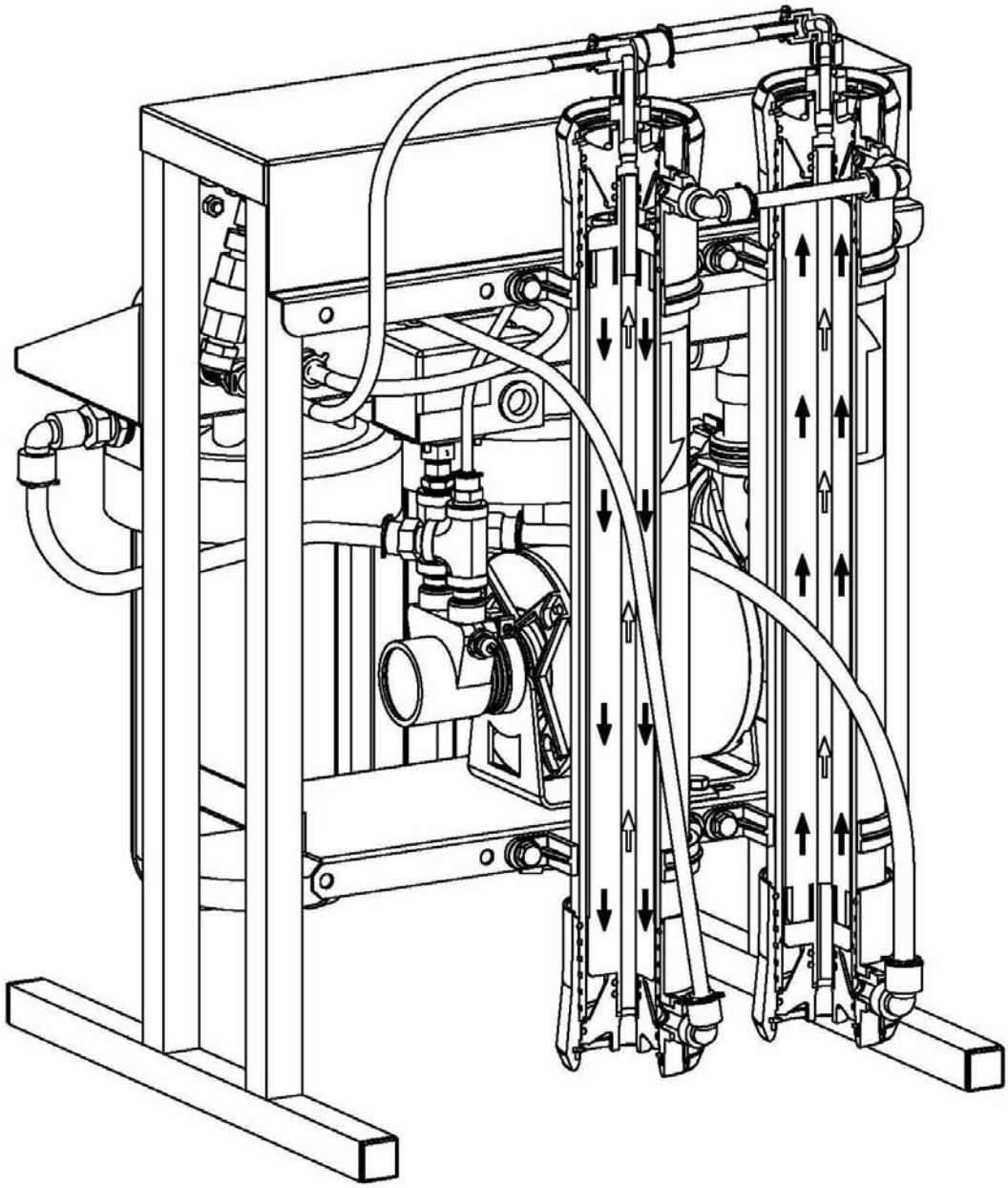

FIGURE 1G

Note: Black arrows represent concentrate water and white arrows represent permeate water.

© 2011 AXEON Water Technologies

AT-1000 MEMBRANE FLOW DIAGRAM

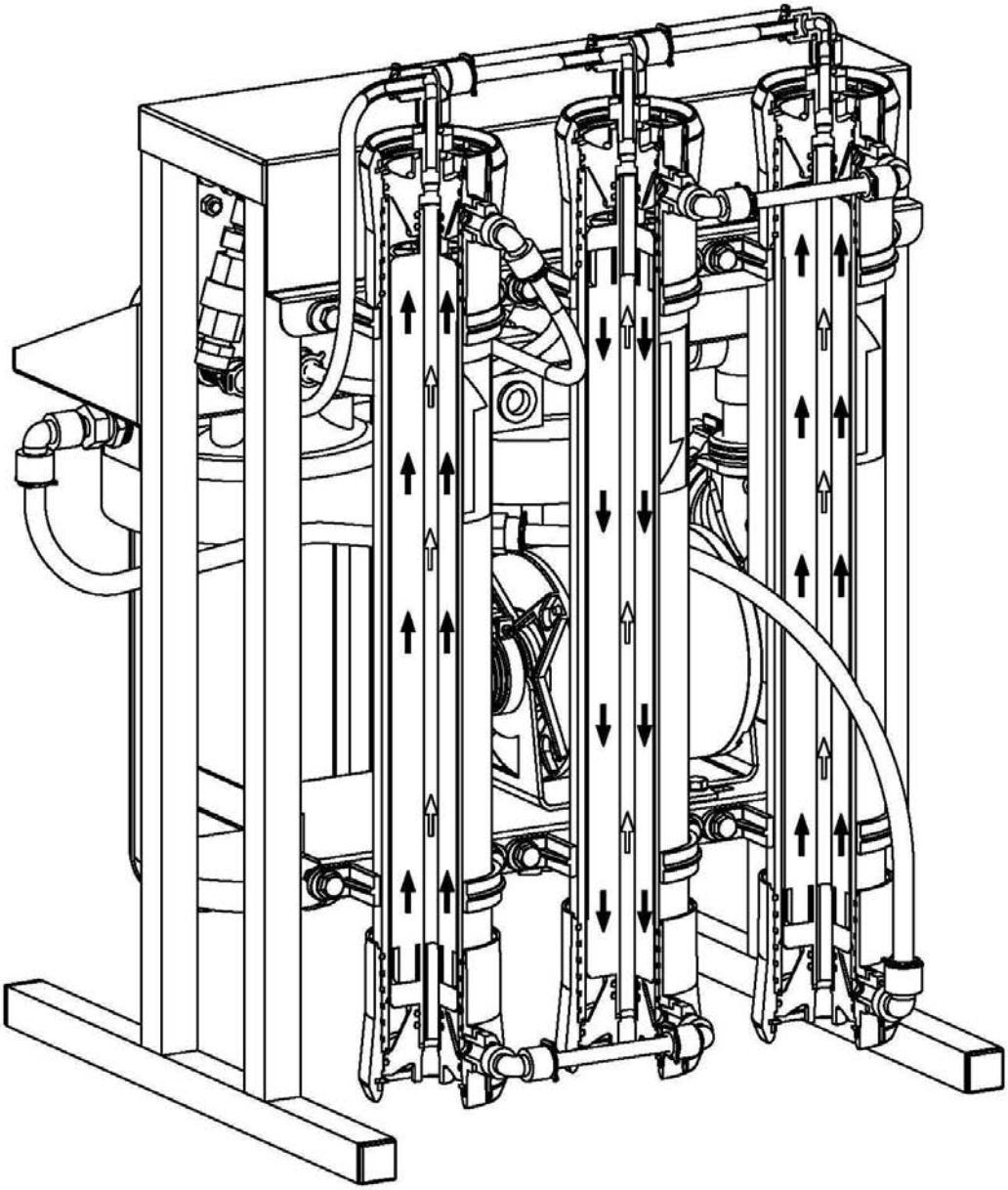

FIGURE 1H

Note: Black arrows represent concentrate water and white arrows represent permeate water.

© 2011 AXEON Water Technologies

SYSTEM PURGING

Carefully inspect your system before initial start-up. Check that all plumbing and electrical connections are not loose or have not come undone during shipment. A User's Manual, Test Results, and Filter Housing Wrench will accompany your AT-Series reverse osmosis system.

NOTE: LEAVE THE POWER TO THE SYSTEM OFF FOR THIS PROCEDURE.

1. Redirect permeate water to the drain for this procedure.
2. Fully open the concentrate valve #8 (Counter Clockwise). (Figure 1B, Page 13)
3. Fully close the recycle valve # 7 (Clockwise) (If Applicable). (Figure 1B, Page 13)
4. Offset the position of the bypass white lever on the solenoid valve #1. (Figure 2, Page 18)
5. Turn the feed water on and let the system purge until no visible bubbles appear from concentrate flow meter #11. (Figure 1B, Page 13)

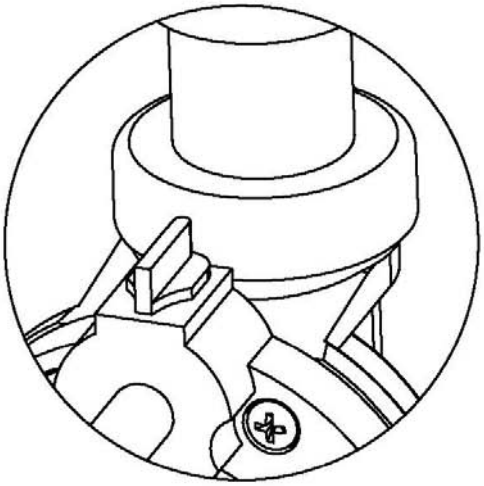

Lever Inline
Operating Position

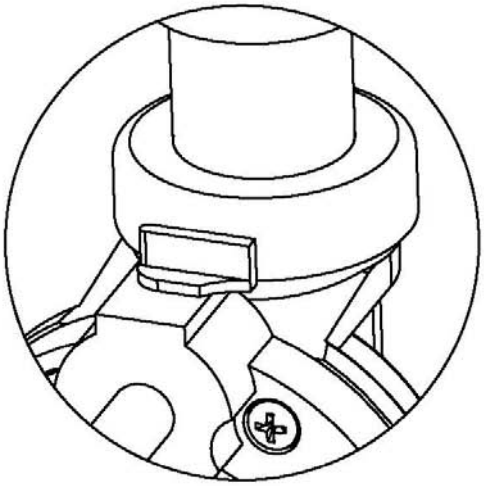

Lever Offset
Bypass Position

FIGURE 2

© 2011 AXEON Water Technologies

INITIAL START-UP

1. Keep the permeate water line to drain for this procedure.
2. Fully open the concentrate valve #8 (Counter Clockwise). (Figure 1B, Page 13)
3. Fully close the recycle valve # 7(Clockwise)(If Applicable). (Figure 1B, Page 13)
4. Return position of the bypass white lever inline on the solenoid valve #1. (Figure 2, Page 18)
5. Turn the RO system on #6 and adjust the concentrate (waste) valve #8, recycle valve # 7 (If Applicable), and the bypass screw on the pump to the designed flow and pressure. (Figure 3, Page 23)
6. Inspect the system for leaks.
7. Allow the system to run for one hour to flush the preservative solution from the system.
8. After one hour, shut down the system.
9. Re-direct the permeate water back to the tank and then turn the system back on.
10. Record the readings daily for a week and after a week record the readings once a week.

Adjust the pump bypass valve and concentrate valve until the correct flow is achieved. For example, AT-500 should be adjusted until it produces about 500 GPD or 0.35 GPM of permeate (product water) at 77˚F. Design flow might be achieved below 150 PSI.

GPM = GPD/1440

Example:

.35 =500/1440

© 2011 AXEON Water Technologies

DESIGN BASIS FOR AT-500 AND AT-1000

Specifications:

Models	AT-500	AT-1000
Design		
Configuration	Single Pass	Single Pass
Feed Water Source	City or Well Water	City or Well Water
Standard Recovery Rate	26%	41%
Recovery with Concentrate Recycle	Up to 75%	Up to 75%
Rejection and Flow Rates		
Nominal Salt Rejection %	98.5	98.5
Permeate Flow* gpm (lpm)	0.35 (1.32)	0.69 (2.61)
Minimum Feed Flow gpm (lpm)	1.50 (5.67)	2.00 (7.57)
Maximum Feed Flow gpm (lpm)	3.00 (11.36)	4.00 (15.14)
Minimum Concentrate Flow gpm (lpm)	1.00 (3.78)	1.00 (3.78)
Connections		
Feed inch	1 FNPT	1 FNPT
Permeate inch	3/8 Tube	3/8 Tube
Concentrate inch	3/8 Tube	3/8 Tube
Membranes		
Membrane(s) Per Vessel	1	1
Membrane Quantity	2	3
Membrane Size	2521	2521
Vessels		
Vessel Array	1:1	1:1:1
Vessel Quantity	2	3
Pumps		
Pump Type	Rotary Vane 401 Brass or 411 SS	Rotary Vane 601 Brass or 611 SS
Motor HP (kw)	1/3 (.24)	1/2 (.36)
RPM @ 60 (50 Hz)	1725 (1465)	1725 (1465)
Electrical		
Standard Voltage	110V 60Hz 1 PH	110V 60Hz 1 PH
Voltage Options	220V 60Hz 1 PH 220V 50Hz 1 PH	220V 60Hz 1 PH 220V 50Hz 1 PH
Voltage Amp Draw (110V 60Hz / 220V 60Hz / 220V 50Hz)	6.6 / 3.2 / 3.7	8.2 / 3.9 / 4.1
Systems Dimensions **		
L x W x H inch (cm)	14 x 20 x 27 (36 x 51 x 69)	14 x 20 x 27 (36 x 51 x 69)
Weight lb. (kg)	65 (29.5)	70 (31.75)

*Product Flow rates are based on equipment test parameters.
**Does not include operating space requirements.

WARNING: NEVER EXCEED THE MAXIMUM PRESSURE RATING OF YOUR SYSTEM.

© 2011 AXEON Water Technologies

OPERATING DO's & DON'Ts

DO:

- Change the cartridge filters regularly
- Monitor the system and keep a daily log
- Run the system, as much as possible, on a continuous basis.
- Adjust the system recovery to the recommended value
- Always feed the pump with filtered water.

DON'T

- Permit chlorine to enter or be present in the feed water.
- Shut down the system for extended periods.
- Close the throttle valve completely.
- Operate the system with insufficient feed flow.
- Operate the pump dry.

OPERATION & MAINTENANCE

The reverse osmosis process causes the concentration of impurities. The impurities may precipitate (come out of solution) when their concentration reaches saturation levels.

NOTE: PRECIPITATION CAN SCALE OR FOUL MEMBRANES AND MUST BE PREVENTED.

Check your feed water chemistry and pre-treat the water and/or reduce the system's recovery as required. If necessary, consult with your local dealer or distributor.

© 2011 AXEON Water Technologies

PRE-FILTER PRESSURE GAUGES

These gauges measure the feed water pressure when it enters and exits the pre-filters. A pressure differential of 10 - 15 psi or more on the two pressure gauges indicates that the pre-filters require servicing. For example, if the inlet pressure is 40 psi, the filter should be changed when the outlet pressure is 30 psi or below.

PERMEATE (PRODUCT) FLOW METER & CONCENTRATE (WASTE) FLOW METER

These flow meters indicate the flow rates of the permeate and concentrate water. The measurements, when added together, also indicate the feed water flow rate or (total flow rate); if the system is not equipped with a concentrate recycle valve.

CAUTION: EXCESSIVE RECYCLING MAY CAUSE PREMATURE FOULING OR SCALING OF THE MEMBRANE ELEMENTS.

LOW PRESSURE SWITCH

The low pressure switch shuts off the system when the feed water pressure drops below 15 PSI, preventing damage to the pump. The system restarts automatically when there is a constant pressure of 35 PSI or more.

If you notice the pressure fluctuating, and the system cycling off and on, turn the system off and ensure that proper feed flow and pressure are available to the system.

PUMP BYPASS VALVE

This valve is installed as a standard feature on the AT-Series reverse osmosis systems. It provides an adjustment for pump pressure, which will vary as the required system pressure changes. As the feed water temperature decreases, and/or the feed water TDS increases, the system will require a higher operating pressure to produce the specified permeate flow. AT system installed in Florida may provide the specified permeate flow of 0.35 gpm at 100 psi; however the same system installed in Maine – much colder feed water – may require 150 psi to produce the same amount of permeate. ***Never exceed 150 psi.***

© 2011 AXEON Water Technologies

Example:

98.5% = [(550-8.25)/550] x 100

% Rejection = (Feed TDS – Product TDS)/ (Feed TDS) x 100

ADJUSTING THE BYPASS VALVE

Use a fat screw driver to increase or decrease the pressure to the bypass valve. To increase the pressure turn the screw clockwise. To decrease the pressure turn the screw counter clockwise. (Figure 3, Page 23)

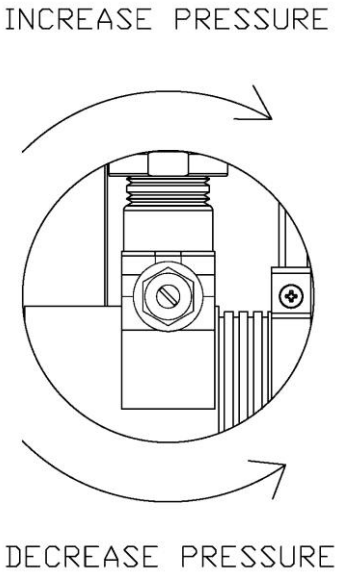

FIGURE 3

© 2011 AXEON Water Technologies

MEMBRANE REMOVAL & REPLACEMENT

Replacing membranes in the pressure vessels is an easy process if you have the proper information and tools at hand. Please refer to the following instructions when removing and replacing membrane elements:

WARNING: ALL PRESSURE GAUGES MUST READ ZERO BEFORE PROCEEDING. BEFORE ATTEMPTING, DISCONNECT THE POWER FROM THE SYSTEM AND BLEED ALL WATER PRESSURE FROM THE SYSTEM.

1. Remove the end caps from the top of the membrane housings. This is done by removing the white snap ring of the membrane housing.

2. Remove the membrane bag containing the membrane element from the shipping box.

WEAR GLOVES FOR THE FOLLOWING STEPS IN ORDER NOT TO CONTAMINATE THE MEMBRANE.

3. Cut the bag open as close as possible to the seal at the end of the bag, so the bag may be re-used if necessary.

4. Make sure that all parts are clean and free from dirt. Examine the brine seal, and permeate tube for nicks or cuts. Replace the O-rings or brine seal if damaged.

5. Flow directions should be observed for installation of each element into each housing. (Figure 4, Page 26)

As time progresses, the efficiency of the membrane will be reduced. In general, the salt rejection does not change significantly until two or three years after installation when operated on properly pretreated feed water. The permeate flow rate will begin to decline slightly after one year of operation, but can be extended with diligent flushing and cleaning of the system. A high pH and/or precipitation of hardness can cause premature loss in rejection.

REPLACING THE MEMBRANE ELEMENT:

© 2011 AXEON Water Technologies

WARNING: THE BRINE SEAL MUST BE IN THE SAME POSITION FOR EACH MEMBRANE ELEMENT HOUSING, SO MARK EACH HOUSING PRIOR TO REMOVING THE MEMBRANE ELEMENTS. THE BRINE SEAL IS A RUBBER SEAL THAT PROTRUDES ON ONE SIDE OF THE MEMBRANE AND IS ALWAYS ON THE FEED SIDE OF THE MEMBRANE ELEMENT.

1. Remove one membrane element at a time from the membrane element housings, from the top of the housing. Long nose pliers may be necessary to pull the old membrane element out of the membrane element housing.

2. Lubricate the brine seal with non petroleum based lubricant, Silicone DC 111.

3. Install the brine seal side of the membrane element first (Figure 4, Page 26). When the housings have a direction of flow from bottom to top, the brine seal should be located at the bottom of the housing.

4. At a slight angle insert the membrane while slightly rotating the element being careful not to tear or flip the brine seal. A slow twisting motion should be used to insert the membrane element, to ensure the brine seal stays in place. Re-lube the brine seal if necessary.

5. With a smooth and constant motion, push the membrane element into the housing so the brine seal enters the housing without coming out of the brine seal groove.

6. Re-install the end caps by gently twisting the end cap while pushing it onto the housing. Ensure that you do not pinch or fatigue any O-rings while re-installing the end plug. Push the end plug on until the outer diameter of the plug is flush with the outer diameter of the membrane housing.

7. Insert the snap ring until it is fully seated. Install the locking clip if available.

8. Reconnect any fittings that may have been disconnected when the membrane element housings were disassembled.

9. To Start-Up the system, please refer to the Initial Start-Up section of this manual. (See Page 19)

CAUTION: WET MEMBRANES ARE SHIPPED IN A PRESERVATIVE SOLUTION. THE MEMBRANES MUST BE FLUSHED FOR AT LEAST 1 HOUR TO REMOVE THE PRESERVATIVE FROM THE MEMBRANE. DISCARD ALL OF THE PERMEATE AND CONCENTRATE, WHICH IS PRODUCED DURING THE FLUSH PERIO

© 2011 AXEON Water Technologies

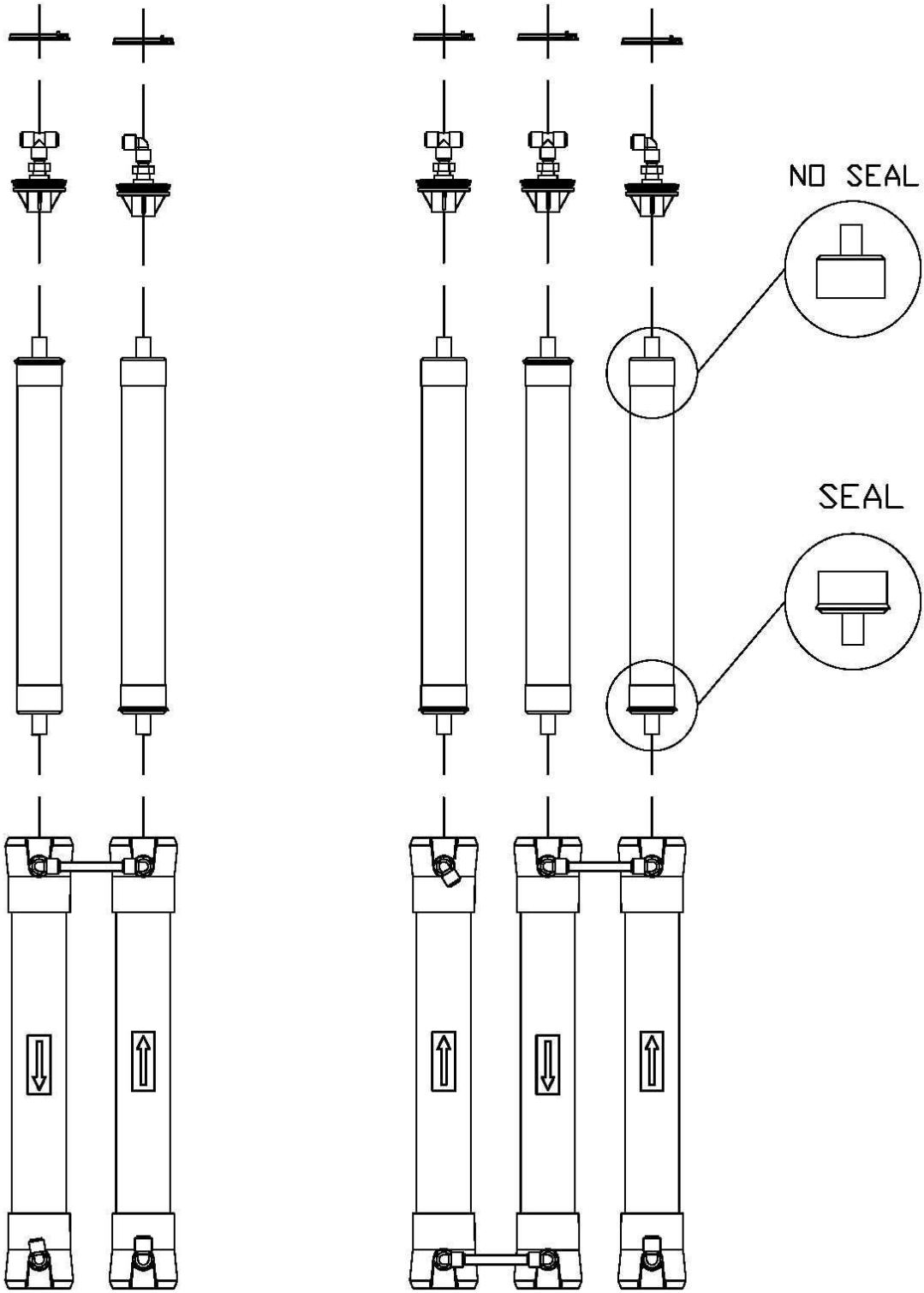

FIGURE 4

View from the back of AT-500, AT-1000 reverse osmosis system.

© 2011 AXEON Water Technologies

FLUSHING THE SYSTEM

The system should be flushed weekly to remove sediment from the surface of the membranes. To manually flush the system follow the preceding steps:

1. The system must be operating during the flush procedure.

2. Fully open the concentrate valve. (Figure 1B, Page 13)

3. Allow the system to run for 10 to 20 minutes.

4. After 10 to 20 minutes, close the concentrate valve to its previous setting. Ensure the proper concentrate flow rate is going to the drain.

5. The system is now ready to operate.

PREPARING UNIT FOR STORAGE OR SHIPMENT

Prior to shipping or storing your system, the system should be cleaned with an appropriate cleaner, flushed with water, and protected from biological attack with an appropriate solution for membrane elements. The membrane housing(s) and plumbing lines of the system must be completely drained. Any water remaining in the plumbing of a system may freeze, causing serious damage.

Preparing system for storage:

1. Totally immerse the elements in the membrane housing in a solution of 2 % Memstor, venting the air outside of the pressure vessels. Use the overflow technique: circulate the Memstor solution in such a way that the remaining air in the system is minimized after the recirculation is completed. After the pressure vessel is filled, the Memstor solution should be allowed to overflow through an opening located higher than the upper end of the highest pressure vessel being filled.

2. Separate the preservation solution from the air outside by closing all valves. Any contact with oxygen will oxidize the Memstor.

3. Check the pH once a week. When the pH becomes 3 or lower, change the preservation solution.

4. Repeat this process at least once a month.

During the shutdown period, the plant must be kept frost-free, or the temperature must not exceed 113°F (45°C).
Preparing unit for shipment:

© 2011 AXEON Water Technologies

5. Disconnect the inlet, concentrate, pre-filter, and permeate plumbing.

6. Drain all water from the pre-filter cartridge housings by unscrewing the housings, removing the pre-filter cartridges, and drain the water from the housings.

7. Disconnect the tubing from the connectors on the permeate and concentrate inlets and outlets.

8. Fully open the concentrate valve.

9. Drain the flow meters.

10. Allow the system to drain for a minimum of eight hours or until the opened ports quit dripping.

11. After draining is complete, reconnect all of the plumbing.

© 2011 AXEON Water Technologies

REVERSE OSMOSIS TROUBLESHOOTING

SYMPTOMS	POSSIBLE CAUSES	CORRECTIVE ACTION
Low Inlet Pressure	Low supply pressure	Increase Inlet Pressure
	Cartridge filters plugged	Change Filters
	Solenoid valve malfunction	Replace Sol. Valve and/or Coil
	Motor may not be drawing correct current	Use clamp-on amp meter to check the motor amp draw.
	Concentrate valve might be damage	Replace Needle Valve
	Leaks	Fix any visible leaks
Low Permeate Flow	Low inlet flow	Adjust concentrate valve
	Cold feed water	See temperature correction sheet
	Low operating pressure	See low inlet pressure
	Defective membrane brine seal	Inspect & or replace brine seal
	Fouled or Scaled membrane	Clean membranes
High permeate flow	Damaged product tube o-rings	Inspect and/or replace
	Damaged or oxidized membrane	Replace membrane
	Exceeding maximum feed water temperature	See temperature correction sheet
Poor permeate quality	Low operating pressure	See low inlet pressure
	Damage product tube o-rings	Inspect and/or replace
	Damaged or oxidized membrane	Replace membrane
Membrane fouling	Metal Oxide Fouling	Improve pretreatment to remove metals. Clean with Acid Cleaners.
	Colloidal Fouling	Optimize pretreatment for colloid removal. Clean with high pH anionic cleaners.
	Scaling (CaSO4, CaSO3, BaSO4, SiO2)	Increase acid addition and antiscalant dosage for CaVO3 and CaCO4. Reduce recovery. Clean with Acid Cleaners
	Biological Fouling	Shock dosage of Sodium Bi-Sulfate. Continuous feed of Sodium Bi-Sulfate at reduced pH. Chlorination and de-chlorination. Replace cartridge filters.
	Organic Fouling	Activated Carbon or other pretreatment. Clean with high pH cleaner.
	Chlorine Oxidation	Check Chlorine feed equipment and de-chlorination system.
	Abrasion of membrane by Crystalline Material	Improve pretreatment. Check all filters for media leakage.

ABNORMAL PERMEATE FLOW

© 2011 AXEON Water Technologies

Permeate flow should be within 20% of the rated production, after correcting the feed water temperatures above or below 77°F. Check your permeate flow meter to determine the permeate flow rate.

NOTE: TO DETERMINE THE TEMPERATURE CORRECTION FACTOR, LOCATE THE TEMPERATURE CORRECTION TABLE IN THIS USER'S MANUAL AND FOLLOW THE DIRECTIONS

© 2011 AXEON Water Technologies

TEMPERATURE CORRECTION FACTORS FOR MEMBRANE

Find the temperature correction factor (TCF) from the table below. Divide the rated permeate flow at 77°F by the temperature correction factor. The result is the permeate flow at the desired temperature. (See example on the next page)

Temperature °F (°C)	Temperature Correction Factor	Temperature °F (°C)	Temperature Correction Factor	Temperature °F (°C)	Temperature Correction Factor	Temperature °F (°C)	Temperature Correction Factor	Temperature °F (°C)	Temperature Correction Factor
50.0 (10.0)	1.711	57.2 (14.0)	1.475	64.4 (18.0)	1.276	71.6 (22.0)	1.109	78.8 (26.0)	0.971
50.2 (10.1)	1.705	57.4 (14.1)	1.469	64.6 (18.1)	1.272	71.8 (22.1)	1.105	79.0 (26.1)	0.968
50.4 (10.2)	1.698	57.6 (14.2)	1.464	64.8 (18.2)	1.267	72.0 (22.2)	1.101	79.2 (26.2)	0.965
50.5 (10.3)	1.692	57.7 (14.3)	1.459	64.9 (18.3)	1.262	72.1 (22.3)	1.097	79.3 (26.3)	0.962
50.7 (10.4)	1.686	57.9 (14.4)	1.453	65.1 (18.4)	1.258	72.3 (22.4)	1.093	79.5 (26.4)	0.959
50.9 (10.5)	1.679	58.1 (14.5)	1.448	65.3 (18.5)	1.254	72.5 (22.5)	1.090	79.7 (26.5)	0.957
51.1 (10.6)	1.673	58.3 (14.6)	1.443	65.5 (18.6)	1.249	72.7 (22.6)	1.086	79.9 (26.6)	0.954
51.3 (10.7)	1.667	58.5 (14.7)	1.437	65.7 (18.7)	1.245	72.9 (22.7)	1.082	80.1 (26.7)	0.951
51.4 (10.8)	1.660	58.6 (14.8)	1.432	65.8 (18.8)	1.240	73.0 (22.8)	1.078	80.2 (26.8)	0.948
51.6 (10.9)	1.654	58.8 (14.9)	1.427	66.0 (18.9)	1.236	73.2 (22.9)	1.075	80.4 (26.9)	0.945
51.8 (11.0)	1.648	59.0 (15.0)	1.422	66.2 (19.0)	1.232	73.4 (23.0)	1.071	80.6 (27.0)	0.943
52.0 (11.1)	1.642	59.2 (15.1)	1.417	66.4 (19.1)	1.227	73.6 (23.1)	1.067	80.8 (27.1)	0.940
52.2 (11.2)	1.636	59.4 (15.2)	1.411	66.6 (19.2)	1.223	73.8 (23.2)	1.064	81.0 (27.2)	0.937
52.3 (11.3)	1.630	59.5 (15.3)	1.406	66.7 (19.3)	1.219	73.9 (23.3)	1.060	81.1 (27.3)	0.934
52.5 (11.4)	1.624	59.7 (15.4)	1.401	66.9 (19.4)	1.214	74.1 (23.4)	1.056	81.3 (27.4)	0.932
52.7 (11.5)	1.618	59.9 (15.5)	1.396	67.1 (19.5)	1.210	74.3 (23.5)	1.053	81.5 (27.5)	0.929
52.9 (11.6)	1.611	60.1 (15.6)	1.391	67.3 (19.6)	1.206	74.5 (23.6)	1.049	81.7 (27.6)	0.926
53.1 (11.7)	1.605	60.3 (15.7)	1.386	67.5 (19.7)	1.201	74.7 (23.7)	1.045	81.9 (27.7)	0.924
53.2 (11.8)	1.600	60.4 (15.8)	1.381	67.6 (19.8)	1.197	74.8 (23.8)	1.042	82.0 (27.8)	0.921
53.4 (11.9)	1.594	60.6 (15.9)	1.376	67.8 (19.9)	1.193	75.0 (23.9)	1.038	82.2 (27.9)	0.918
53.6 (12.0)	1.588	60.8 (16.0)	1.371	68.0 (20.0)	1.189	75.2 (24.0)	1.035	82.4 (28.0)	0.915
53.8 (12.1)	1.582	61.0 (16.1)	1.366	68.2 (20.1)	1.185	75.4 (24.1)	1.031	82.6 (28.1)	0.913
54.0 (12.2)	1.576	61.2 (16.2)	1.361	68.4 (20.2)	1.180	75.6 (24.2)	1.028	82.8 (28.2)	0.910
54.1 (12.3)	1.570	61.3 (16.3)	1.356	68.5 (20.3)	1.176	75.7 (24.3)	1.024	82.9 (28.3)	0.908
54.3 (12.4)	1.564	61.5 (16.4)	1.351	68.7 (20.4)	1.172	75.9 (24.4)	1.021	83.1 (28.4)	0.905
54.5 (12.5)	1.558	61.7 (16.5)	1.347	68.9 (20.5)	1.168	76.1 (24.5)	1.017	83.3 (28.5)	0.902
54.7 (12.6)	1.553	61.9 (16.6)	1.342	69.1 (20.6)	1.164	76.3 (24.6)	1.014	83.5 (28.6)	0.900
54.9 (12.7)	1.547	62.1 (16.7)	1.337	69.3 (20.7)	1.160	76.5 (24.7)	1.010	83.7 (28.7)	0.897
55.0 (12.8)	1.541	62.2 (16.8)	1.332	69.4 (20.8)	1.156	76.6 (24.8)	1.007	83.8 (28.8)	0.894
55.2 (12.9)	1.536	62.4 (16.9)	1.327	69.6 (20.9)	1.152	76.8 (24.9)	1.003	84.0 (28.9)	0.892
55.4 (13.0)	1.530	62.6 (17.0)	1.323	69.8 (21.0)	1.148	77.0 (25.0)	1.000	84.2 (29.0)	0.889
55.6 (13.1)	1.524	62.8 (17.1)	1.318	70.0 (21.1)	1.144	77.2 (25.1)	0.997	84.4 (29.1)	0.887
55.8 (13.2)	1.519	63.0 (17.2)	1.313	70.2 (21.2)	1.140	77.4 (25.2)	0.994	84.6 (29.2)	0.884
55.9 (13.3)	1.513	63.1 (17.3)	1.308	70.3 (21.3)	1.136	77.5 (25.3)	0.991	84.7 (29.3)	0.882
56.1 (13.4)	1.508	63.3 (17.4)	1.304	70.5 (21.4)	1.132	77.7 (25.4)	0.988	84.9 (29.4)	0.879
56.3 (13.5)	1.502	63.5 (17.5)	1.299	70.7 (21.5)	1.128	77.9 (25.5)	0.985	85.1 (29.5)	0.877
56.5 (13.6)	1.496	63.7 (17.6)	1.294	70.9 (21.6)	1.124	78.1 (25.6)	0.982	85.3 (29.6)	0.874
56.7 (13.7)	1.491	63.9 (17.7)	1.290	71.1 (21.7)	1.120	78.3 (25.7)	0.979	85.5 (29.7)	0.871
56.8 (13.8)	1.486	64.0 (17.8)	1.285	71.2 (21.8)	1.116	78.4 (25.8)	0.977	85.6 (29.8)	0.869
57.0 (13.9)	1.480	64.2 (17.9)	1.281	71.4 (21.9)	1.112	78.6 (25.9)	0.974	85.8 (29.9)	0.866

°F = (°C x 9/5) + 32

Corrected Flow Rate = (Measured Flow Rate)* (TCF @ Feed Water Temp.)

© 2011 AXEON Water Technologies

If a system is rated to produce 5 gpm of permeate water @ 77˚ F. The same system will produce more water at a higher temperature. It will also produce less water at a lower temperature. Use the temperature correction table to obtain the correct flow.

Example:

5 gpm @ 59˚ F (5÷1.42=3.52 gpm)
5 gpm @ 77˚ F (5÷1=5 gpm)
5 gpm @ 84˚ F (5÷0.89=5.62 gpm)

SERVICE ASSISTANCE

If service assistance is required, please complete the following process:
Contact your local dealer or distributor. Prior to making the call, have the following information available: system installation date, serial number, daily log sheets, current operating parameters (e.g. flow, operating pressures, pH, etc.), and a detailed description of the problem.

© 2011 AXEON Water Technologies

OPERATION

Company: _____

Location: _____

Week Of: _____

System Serial #: _____

Date of Start-Up: _____

Date of Last Cleaning: _____

Date					
Time					
Hour of Operation					
Filter inlet pressure (psi)					
Filter outlet Pressure (psi)					
Concentrate Pressure (psi)					
Pump Discharge Pressure (psi)					
Feed Flow (gpm)					
Permeate Flow (gpm)					
Concentrate Flow (gpm)					
Recovery %					
Feed Temperature					
Feed TDS (ppm)					
Permeate TDS (ppm)					
Rejection %					
Feed PH					
Permeate PH					
Scale Inhibitor Feed (ppm)					
Iron (mg/L)					
Free Chlorine (mg/L)					
Hardness (gpg CaCO3)					

© 2011 AXEON Water Technologies

DRAWINGS

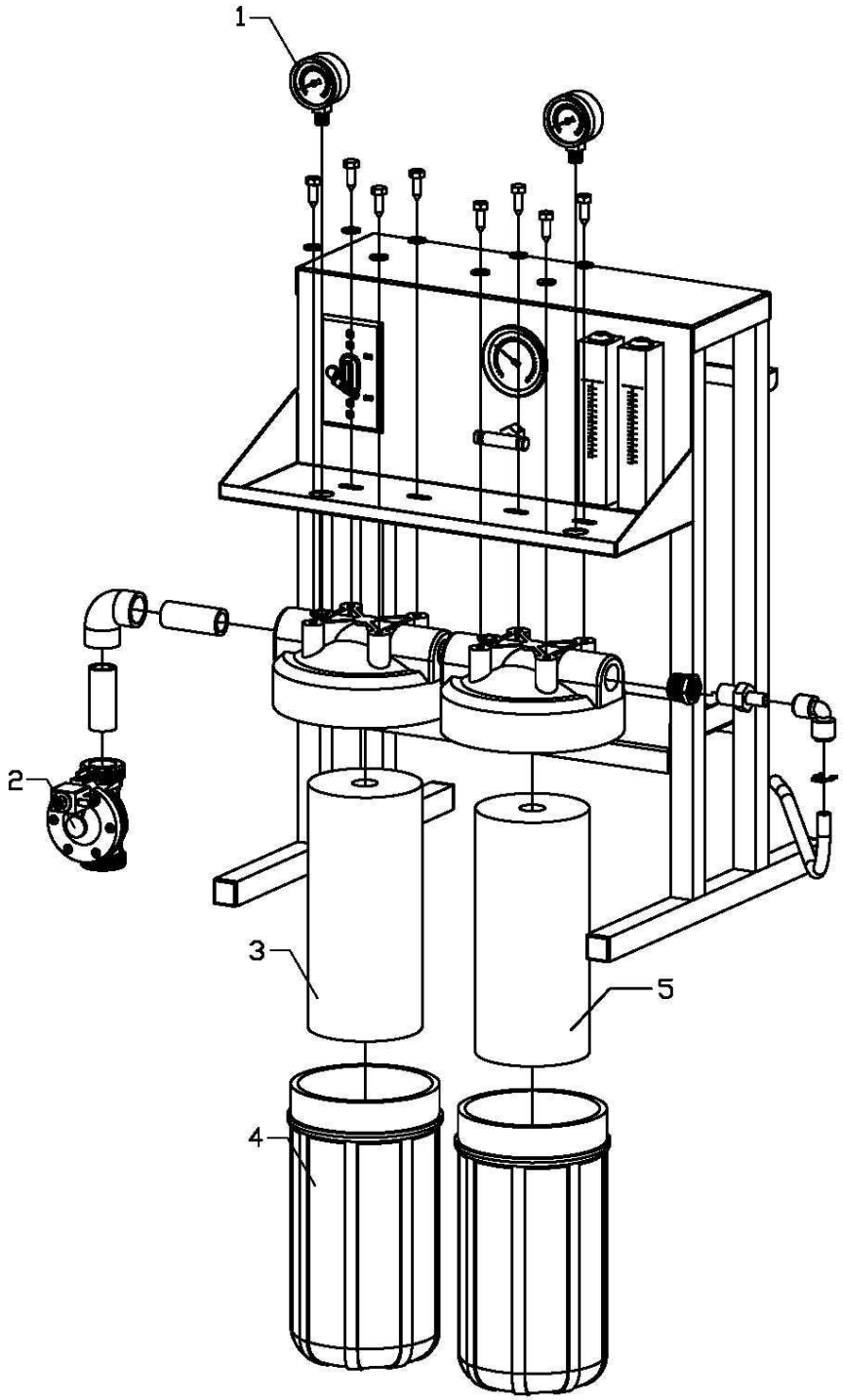

FIGURE 5

© 2011 AXEON Water Technologies

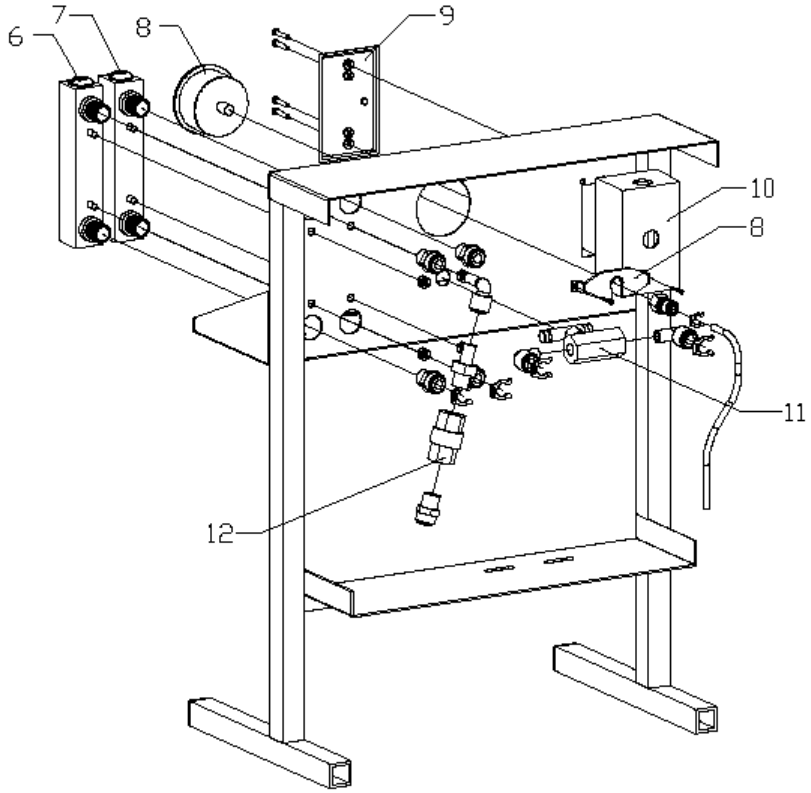

Note: A portion of the frame has been removed to expose components.

FIGURE 6

© 2011 AXEON Water Technologies

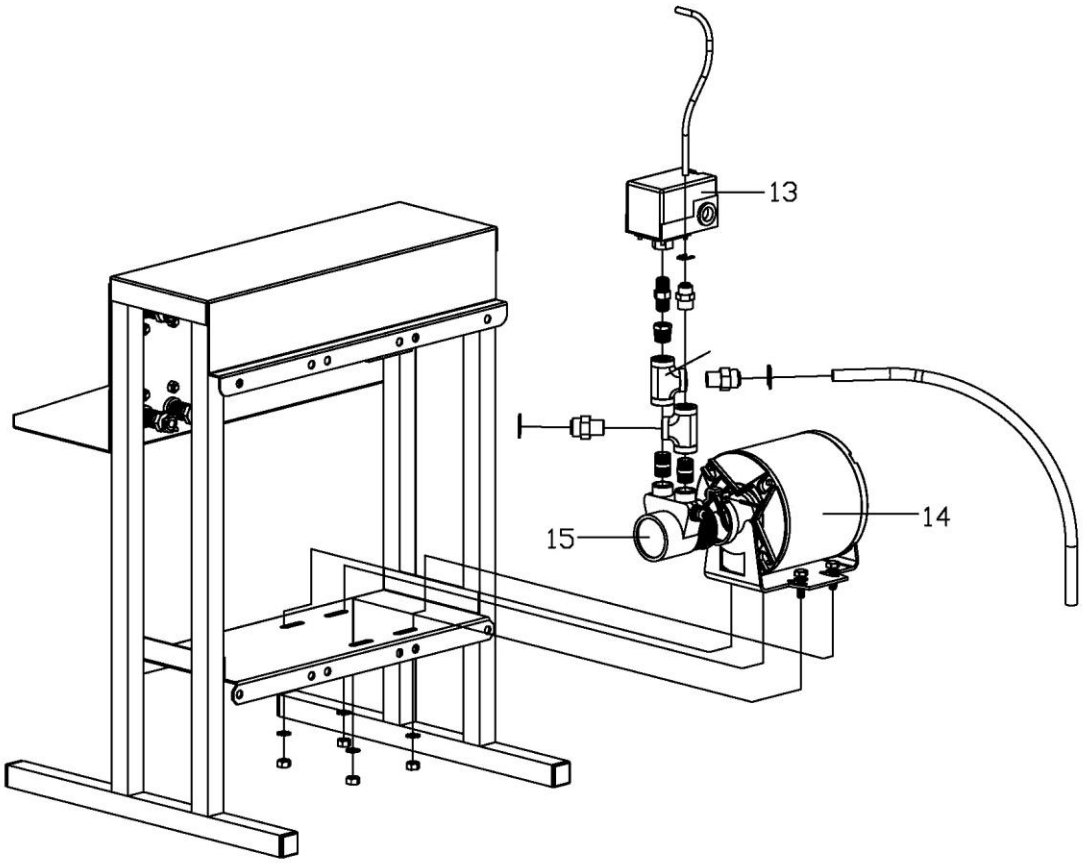

FIGURE 7

© 2011 AXEON Water Technologies

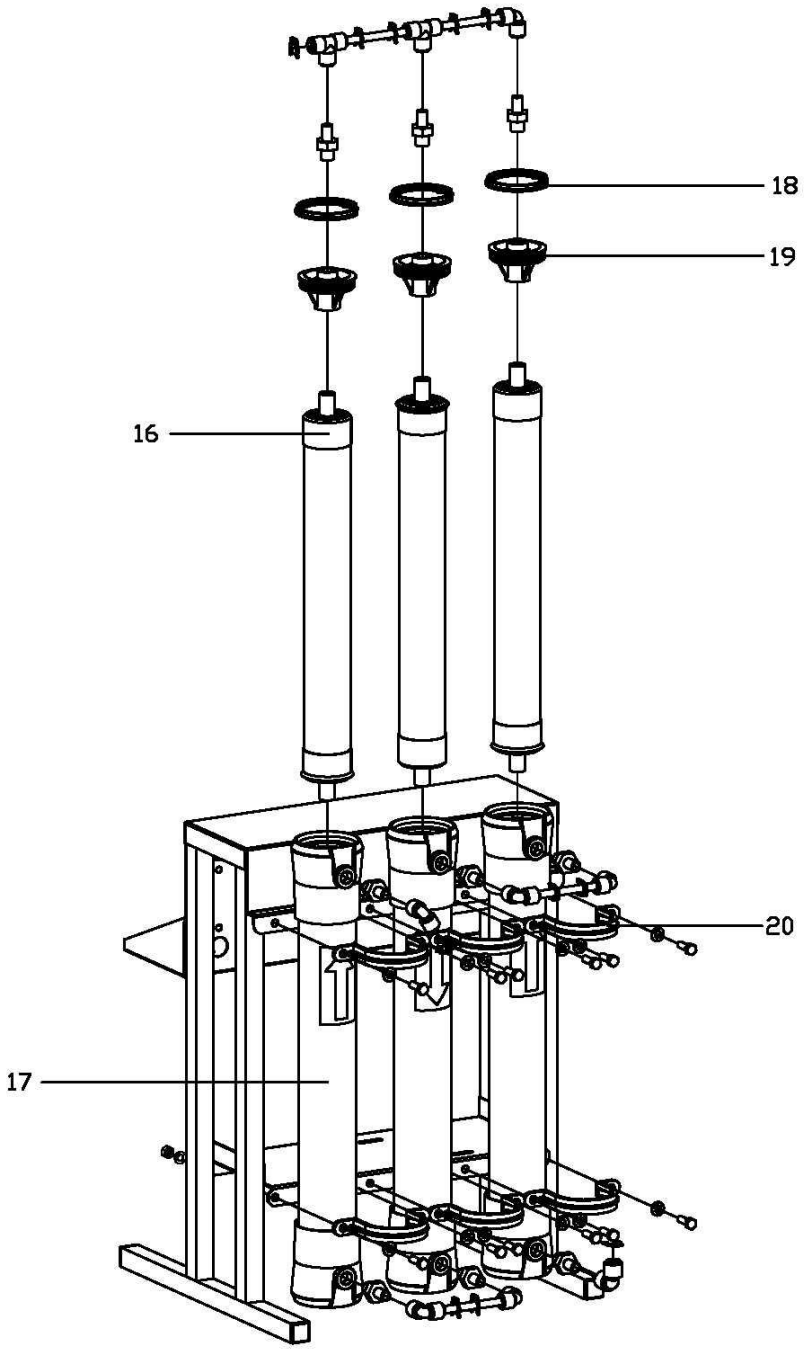

FIGURE 8

© 2011 AXEON Water Technologies

AT-500 SYSTEM PART LIST

Item No.	Qty.	Part No.	Description
1	2	200901	GAUGE, BTM, NO FILL, 0-100PSI/BAR, 2” DIA
2	1	204913	VALVE, SOLENOID, N/C, UL, 110V, 1” FNPT
3	1	200635	CART, SEDIMENT, POLYPRO, 4.5”X10”, 5 MIC
4	2	203648	HOUSING, FILTER, BLK/BLU, 4.5”X10”, 1” FNPT
5	1	200662	CARTRIDGE, CARBON, BLOCK, 4.5”X10”, 10 MIC
6	1	200898	METER, FLOW, PM, 0-5GPM, 1/2” x 1/2” MNPT
7	1	200897	METER, FLOW, PM, 0-2GPM, 1/2” x 1/2” MNPT
8	1	200904	GAUGE, BKM, FILL, 0-300PSI/BAR, 2.5” DIA
9	1	200862	SWITCH, ON/OFF, SINGLE POLE, 110V
10	1	200864	BOX, SWITCH, GANG, SINGLE, PROOF, WEATHER
11	1	201004	VALVE, NEEDLE, SS 316L, 1/4" FNPT, PUROTECH
12	1	200964	VALVE, CHECK, PP, 3/8” FNPT x 3/8” FNPT
13	1	200906	SWITCH, PRESSURE, LOW, N/O 15-30, 1/4” FNPT
14	1	200809	MOTOR, CARB., 1/2" HP, 110/220V, 50/60 HZ
15	1	200781	PUMP, VANE, BRASS, BYPASS, 3GPM, 601
16	2	200375	MEM, HF1, 2521, SYSTEMS
17	2	200519	MHS, PVC, 2521, 3/8” x 3/8” SP FNPT, SYSTEMS
18	4	200593	SNAP RING, DELRIN, 2.5”
19	2	200591	END PLUG, OPEN, GTX, 2.5”, 3/8” FNPT
19	2	200592	END PLUG, CLOSED, GTX, 2.5”, 3/8” FNPT
20	4	200586	CLAMP, SADDLE, NYLON, BLK, 2.5”, PVC

© 2011 AXEON Water Technologies

AT-1000 SYSTEM PART LIST

Item No.	Qty.	Part No.	Description
1	2	200901	GAUGE, BTM, NO FILL, 0-100PSI/BAR, 2” DIA
2	1	204913	VALVE, SOLENOID, N/C, UL, 110V, 1” FNPT
3	1	200635	CART, SEDIMENT, POLYPRO, 4.5”X10”, 5 MIC
4	2	203648	HOUSING, FILTER, BLK/BLU, 4.5”X10”, 1” FNPT
5	1	200662	CARTRIDGE, CARBON, BLOCK, 4.5”X10”, 10 MIC
6	1	200898	METER, FLOW, PM, 0-5GPM, 1/2” x 1/2” MNPT
7	1	200897	METER, FLOW, PM, 0-2GPM, 1/2” x 1/2” MNPT
8	1	200904	GAUGE, BKM, FILL, 0-300PSI/BAR, 2.5” DIA
9	1	200862	SWITCH, ON/OFF, SINGLE POLE, 110V
10	1	200864	BOX, SWITCH, GANG, SINGLE, PROOF, WEATHER
11	1	201004	VALVE, NEEDLE, SS 316L, 1/4" FNPT, PUROTECH
12	1	200964	VALVE, CHECK, PP, 3/8” FNPT x 3/8” FNPT
13	1	200906	SWITCH, PRESSURE, LOW, N/O 15-30, 1/4” FNPT
14	1	200809	MOTOR, CARB., 1/2" HP, 110/220V, 50/60 HZ
15	1	200781	PUMP, VANE, BRASS, BYPASS, 3GPM, 601
16	3	200375	MEM, HF1, 2521, SYSTEMS
17	3	200519	MHS, PVC, 2521, 3/8” x 3/8” SP FNPT, SYSTEMS
18	6	200593	SNAP RING, DELRIN, 2.5”
19	3	200591	END PLUG, OPEN, GTX, 2.5”, 3/8” FNPT
19	3	200592	END PLUG, CLOSED, GTX, 2.5”, 3/8” FNPT
20	6	200586	CLAMP, SADDLE, NYLON, BLK, 2.5”, PVC

© 2011 AXEON Water Technologies

AT-500 FLOW DIAGRAM

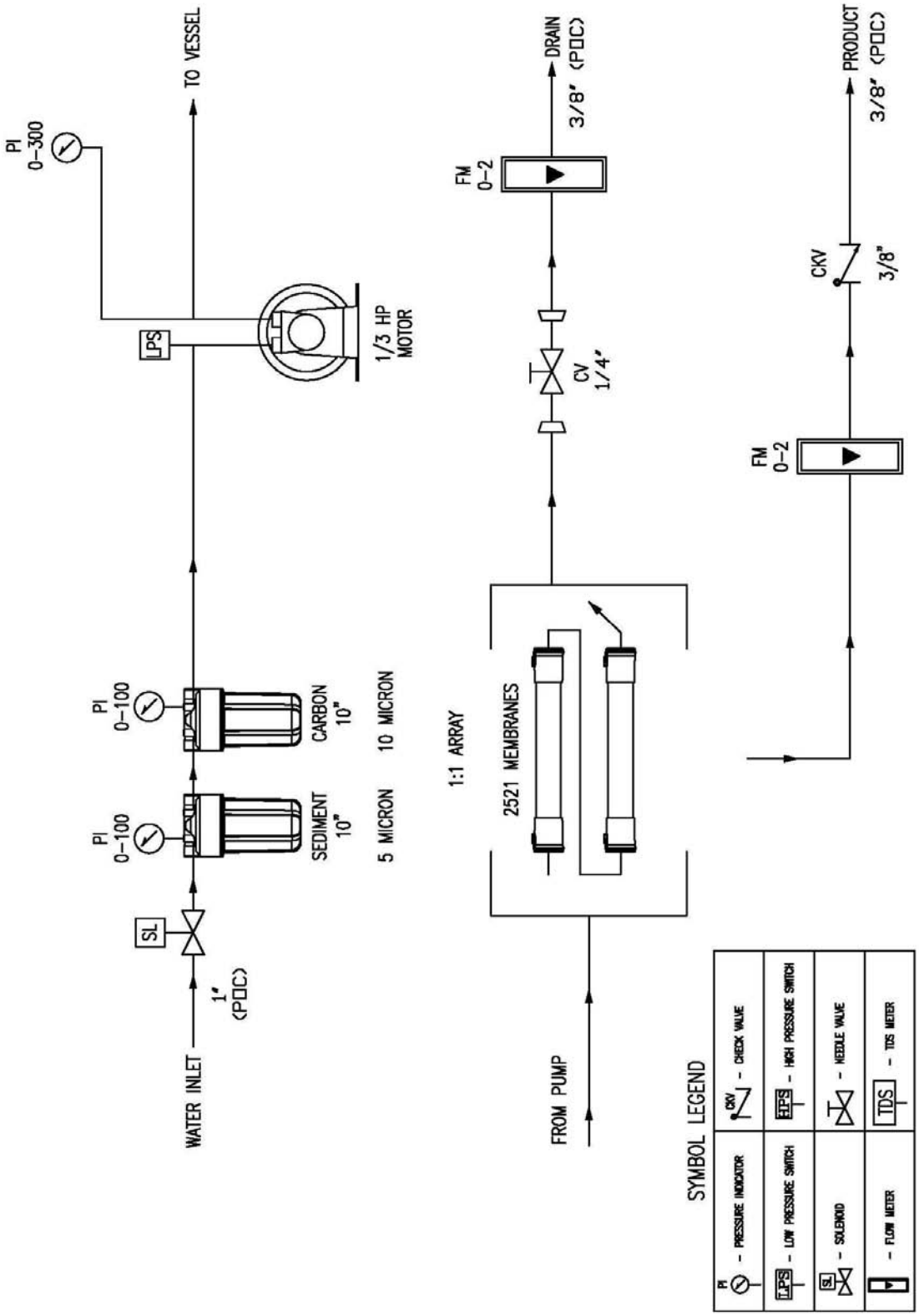

© 2011 AXEON Water Technologies

AT-1000 FLOW DIAGRAM

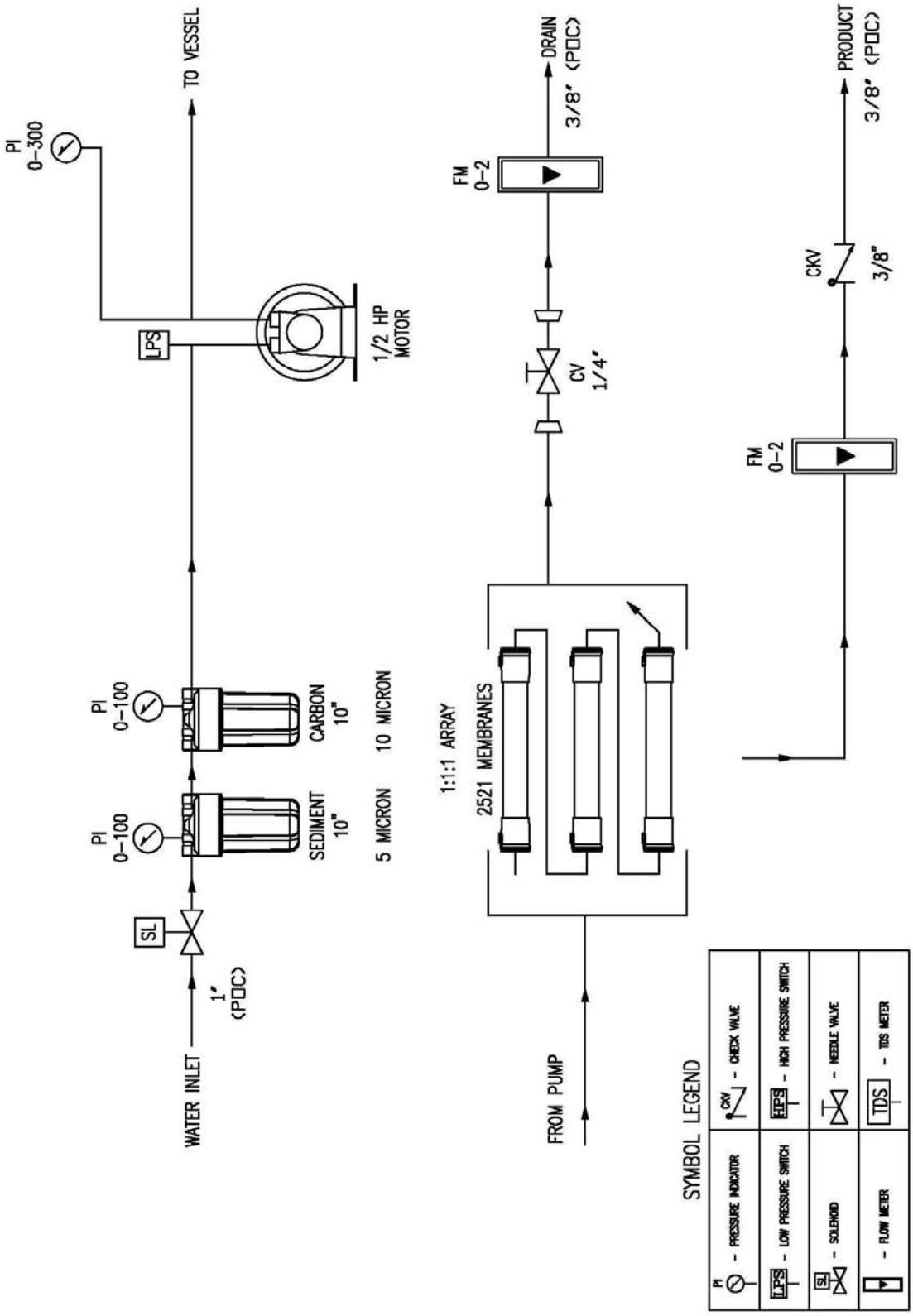

© 2011 AXEON Water Technologies

110V ELECTRICAL SCHEMATIC

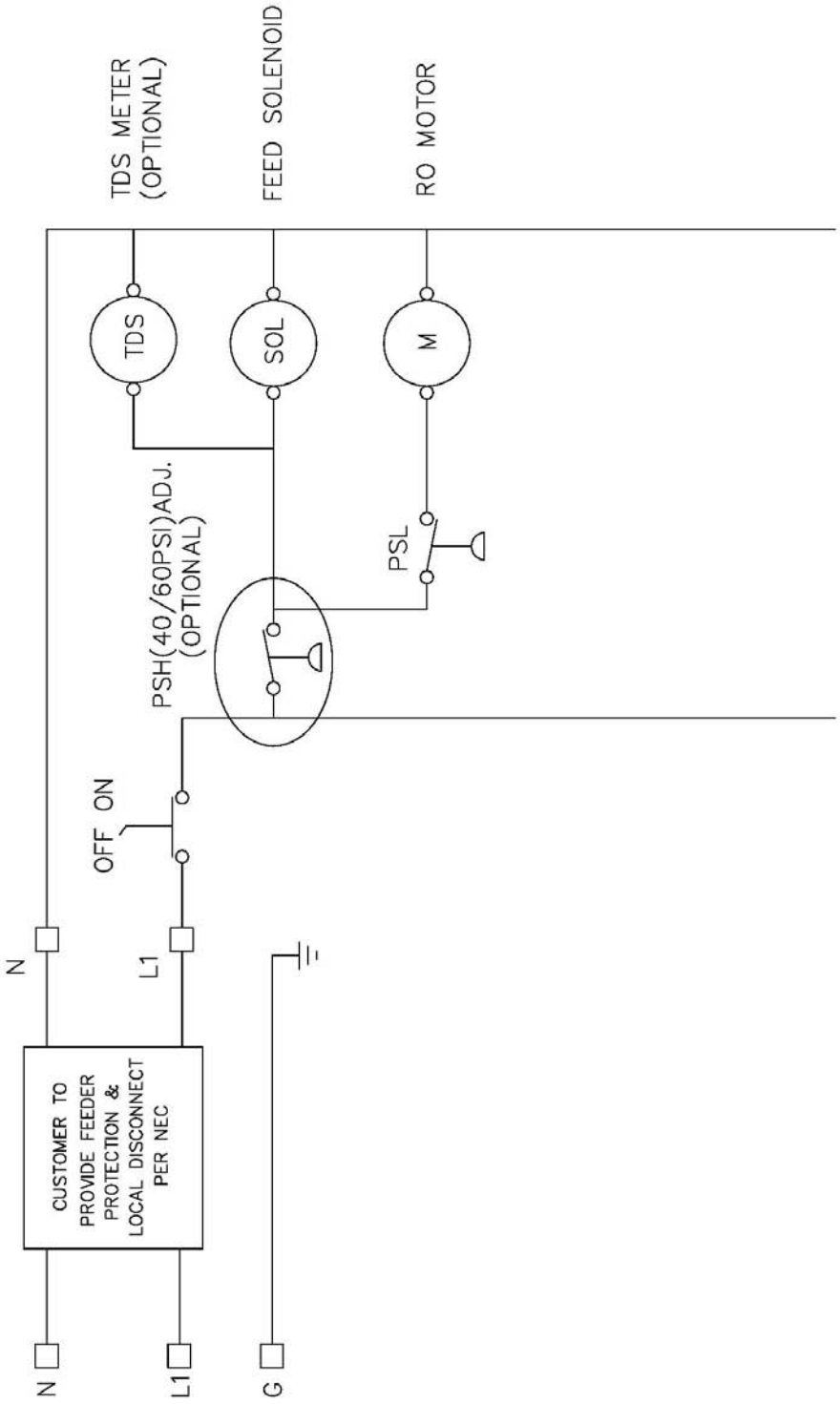

© 2011 AXEON Water Technologies

220V ELECTRICAL SCHEMATIC

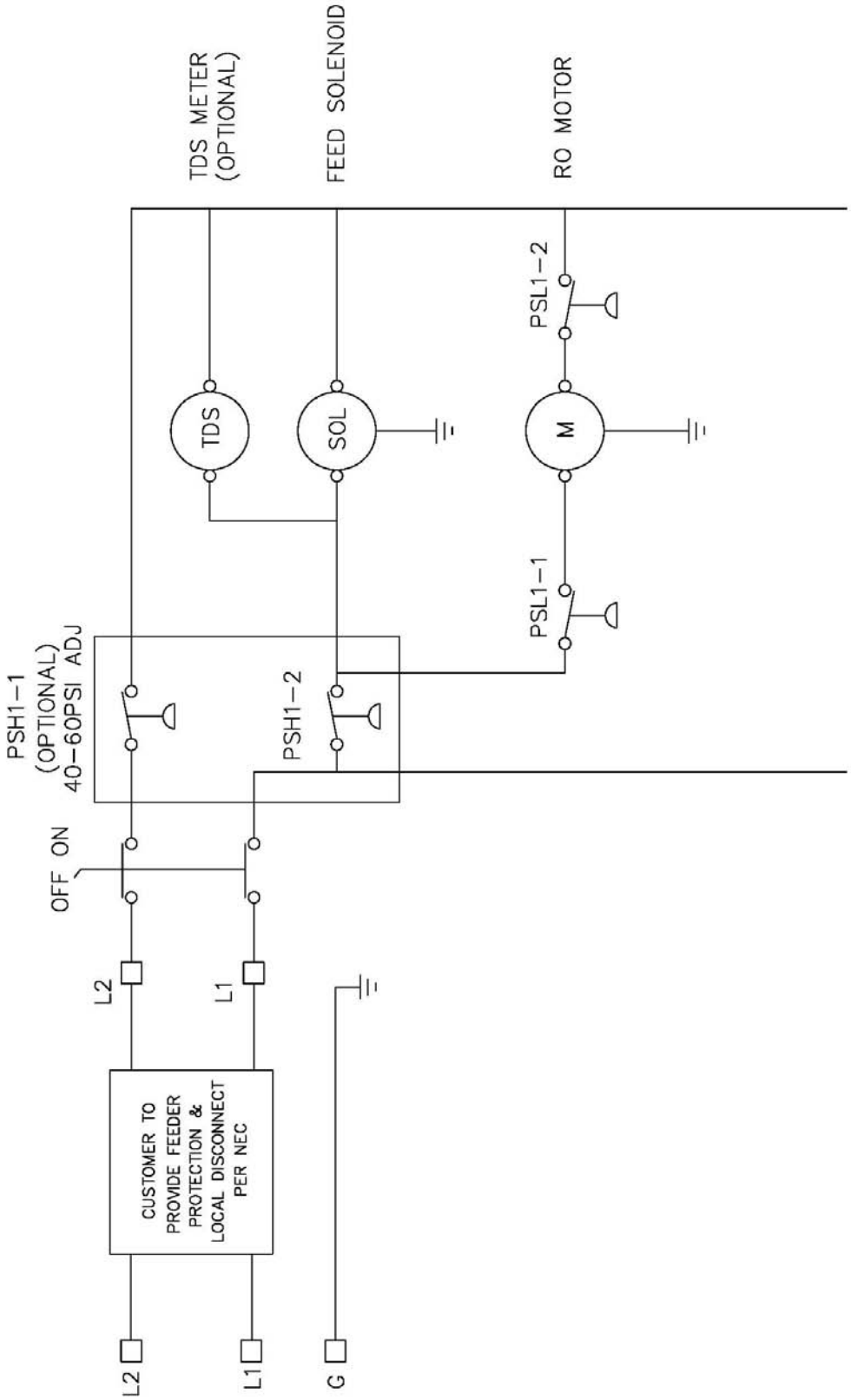

© 2011 AXEON Water Technologies

© 2011 AXEON Water Technologies