KINGSTON

Wall Support Brackets

Installation Instructions

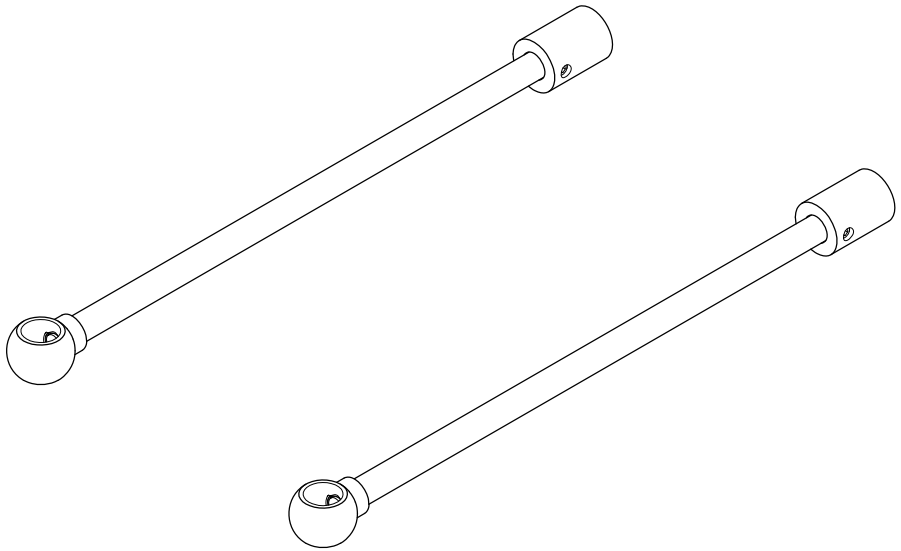

Parts:

Slotted Set Screw	Set Screw	Mounting Screw & Anchor
		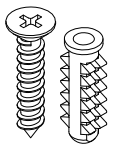
2 Pcs	2 Pcs	2 Pcs

www.kingstonbrass.com

TOLL-FREE CUSTOMER SERVICE: 1-877-2-KBRASS
TECHNICAL SUPPORT E-mail: service@kingstonbrass.com
12775 Reservoir Street, Chino, CA 91710

⚠CAUTION

Failure to follow all installation directions may cause product to detach from the wall and cause serious injury

Tools Required

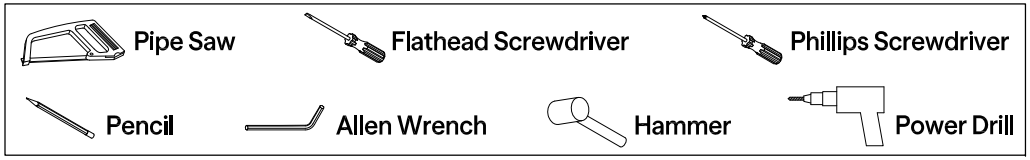

Before Installation

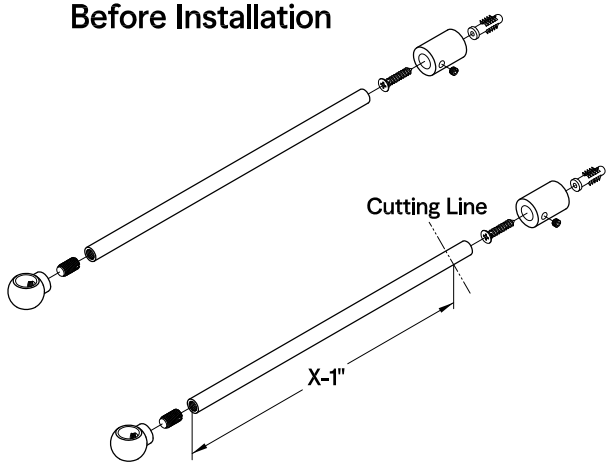

After Installation

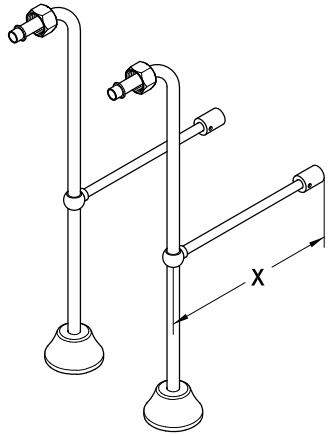

Installation Steps:

Step 1. Unthread ring from the support rod by turning counter-clockwise.

Step 2. Slide ring onto the supply line and secure at the desired position by tightening the screw using a flathead screwdriver, do not over-tighten as this may damage the supply line.

Step 3. Locate the proper position where the wall bracket will be installed, drill hole for anchor on the wall and secure the wall bracket with the enclosed screw.

Step 4. The maximum distance allowed with this wall support rod is 10-1/2" if you need a shorter distance, measure the distance between the center of the supply line and the wall and subtract 1", cut the rod from the end that does not have the inner threads.

Step 5. Insert the unthreaded end of the support rod onto the wall bracket and thread the rod onto the ring secured at the supply line by turning clockwise, using an Allen hex wrench tighten the set screw.

Warning!!!

Reshaping, bending or altering supply line except for cutting to size Or use of nuts or washers not supplied with this kit will void your warranty.
Supply lines are designed to be braced to the wall or the overflow tube, Failure to secure properly will void the warranty.
Please do not pull or lean on the faucet once it has been installed, this may bend or pull the supply line which may cause a leak resulting in possible water damage.

©2025 LVC Kingston LLC. All Rights Reserved.

2025-05-D