KINGSTON

TO ORDER PARTS, CALL: 1-877-252-7277
www.kingstonbrass.com

# CCK265MB,C,PB,AB,ORB,PN,SB,SND

## Tub Wall Mount Tub Filler with Hand Shower

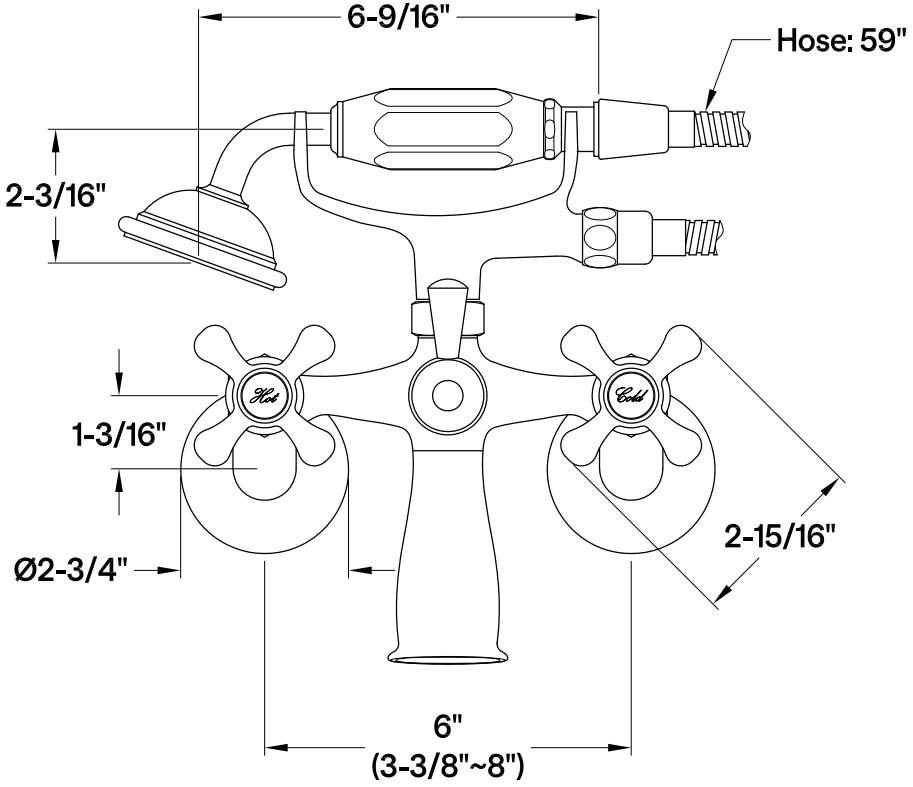


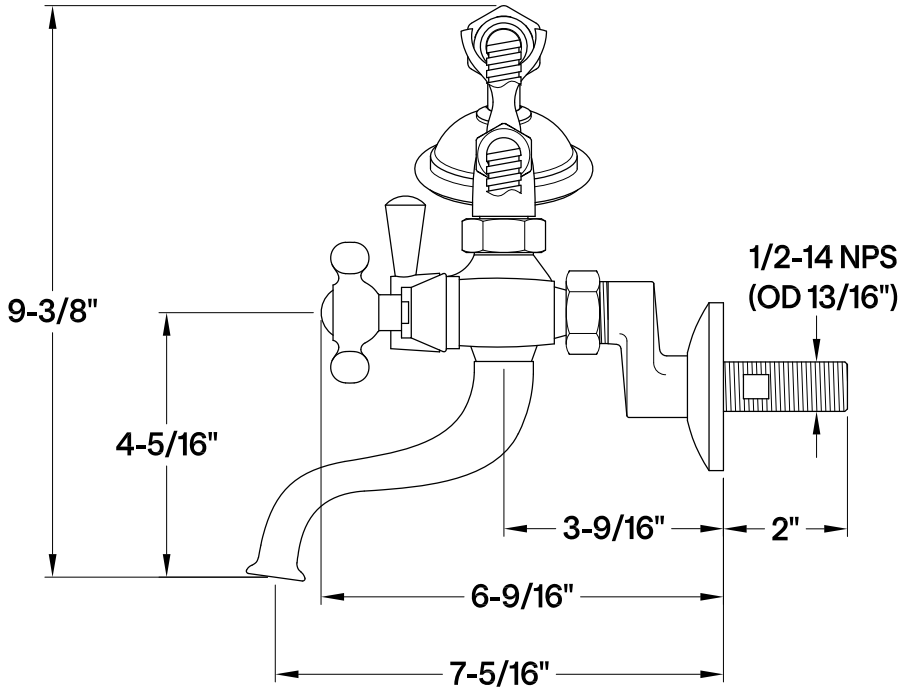

KINGSTON

TO ORDER PARTS, CALL: 1-877-252-7277
www.kingstonbrass.com

# CCK265MB,C,PB,AB,ORB,PN,SB,SND

## Double Offset Bath Supply

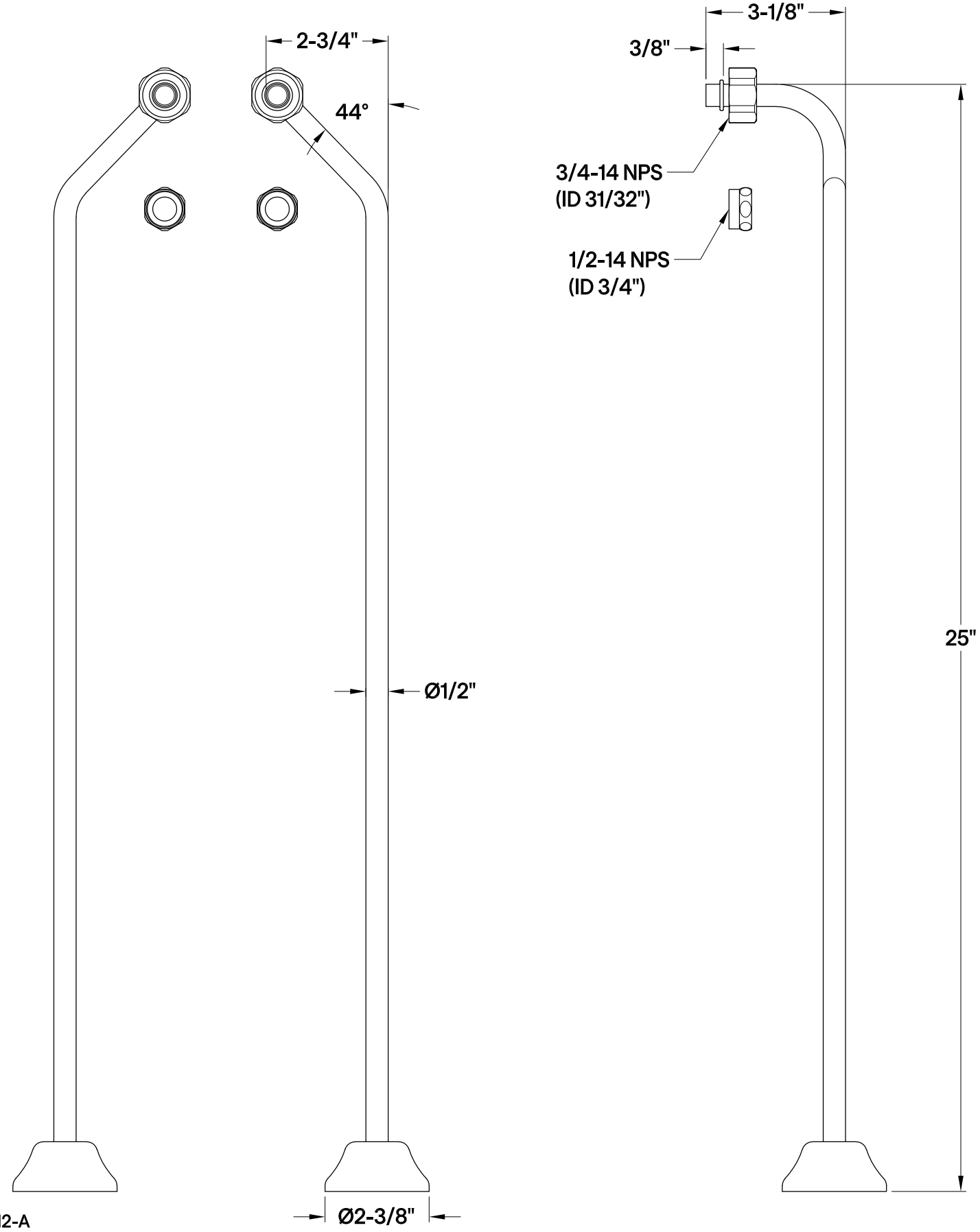

# CCK265MB,C,PB,AB,ORB,PN,SB,SND

## Quarter Turn Valves, 1/2" FIP x 1/2" or 7/16" OD Slip-Joint

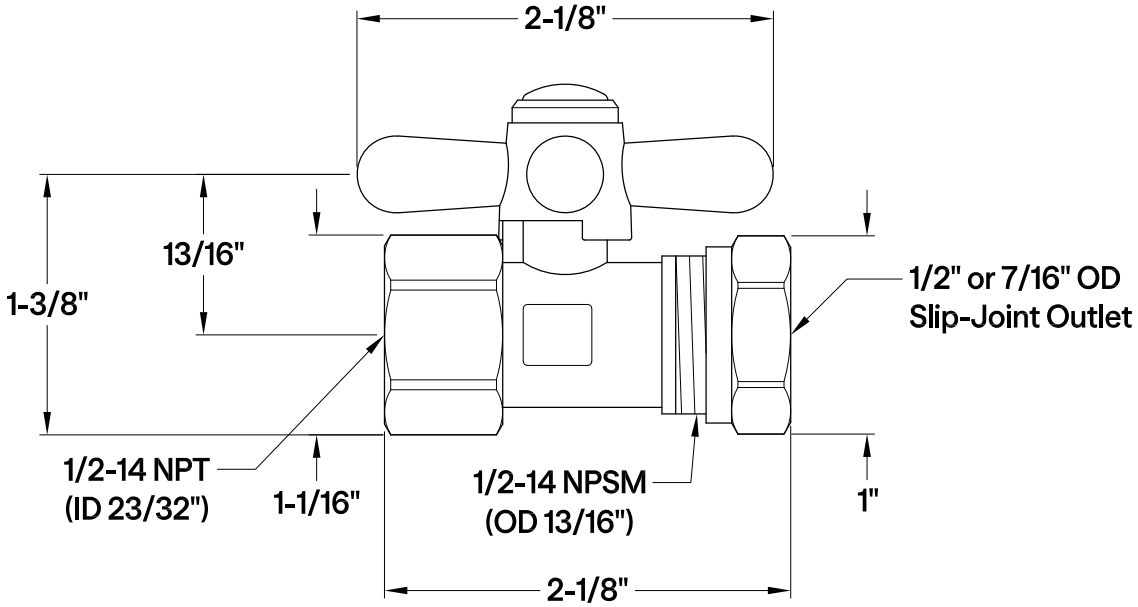

KINGSTON

TO ORDER PARTS, CALL: 1-877-252-7277
www.kingstonbrass.com

# CCK265MB,C,PB,AB,ORB,PN,SB,SND

## Clawfoot Tub Waste & Overflow Drain, 20 Gauge

