KINGSTON

TO ORDER PARTS, CALL: 1-877-252-7277
www.kingstonbrass.com

KB6691DFL

Single Handle Pressure Balanced Tub & Shower Faucet

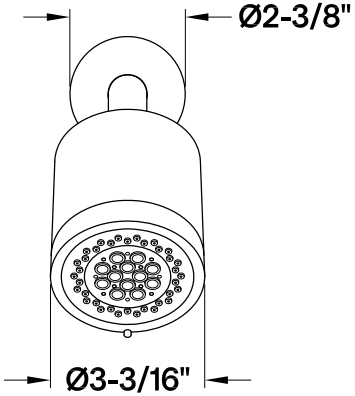

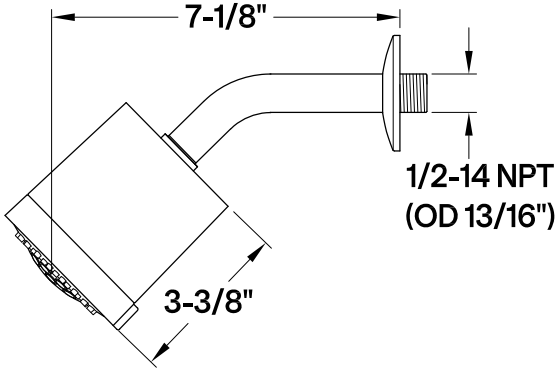

Bracket

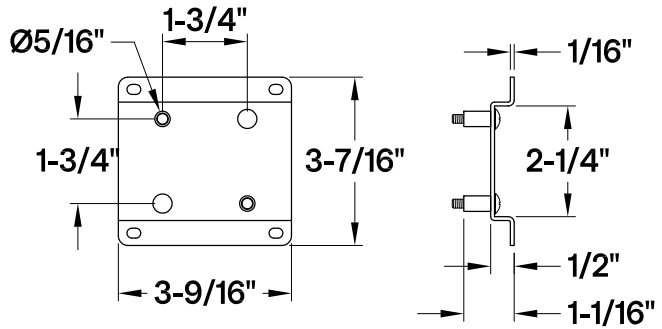

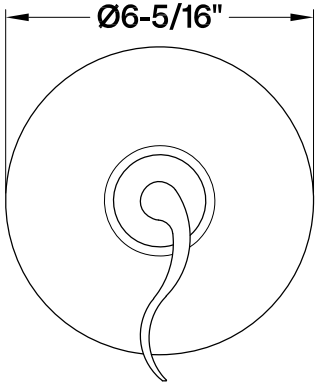

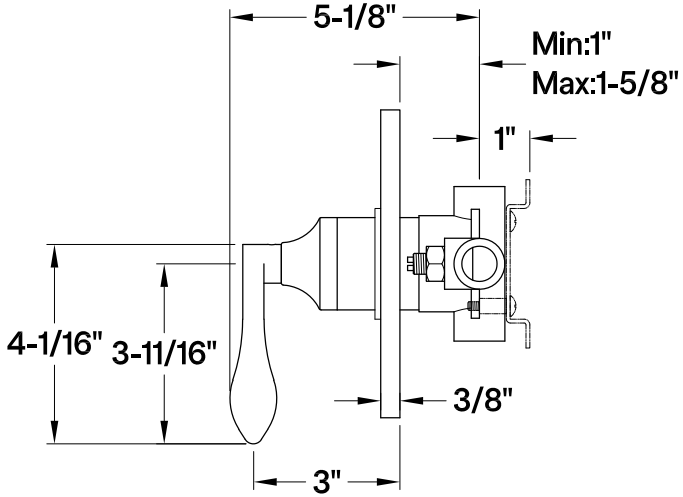

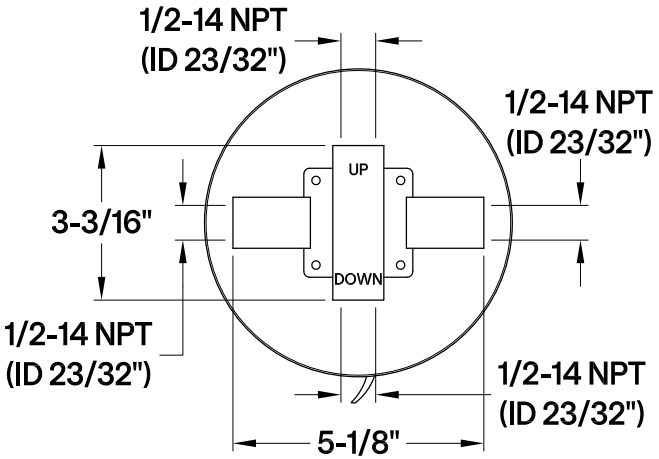

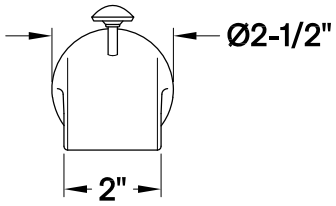

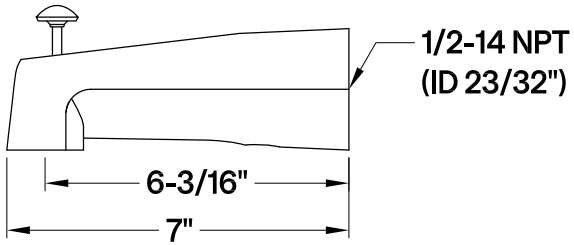

2025-11-B