alaterre
FURNITURE

ISOBEL CONSOLE TALE 36

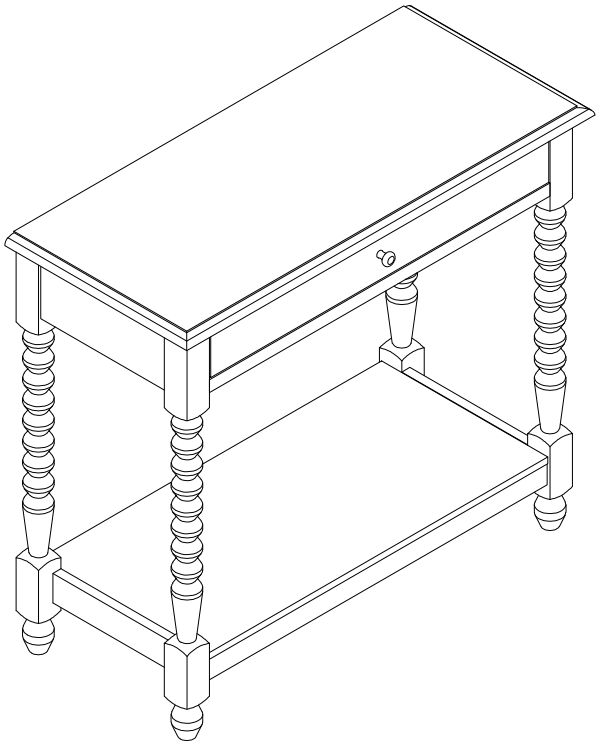

REPLACEMENT PARTS

Please do not contact the company purchased from as we can help you faster.
Order replacement parts and hardware at " www.TeamCustomerService.com "

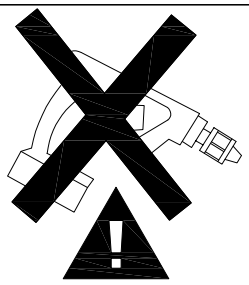

. Use of power tool to assemble this product will invalidate any claim and damage this product making it unsafe !!!
. Please assemble on a clean soft surface to avoid damage.

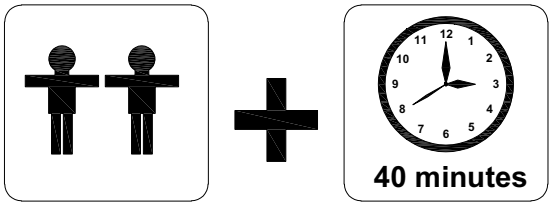

Tools Required

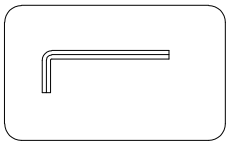

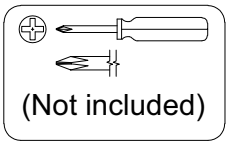

Part list - Isobel Console Table 36

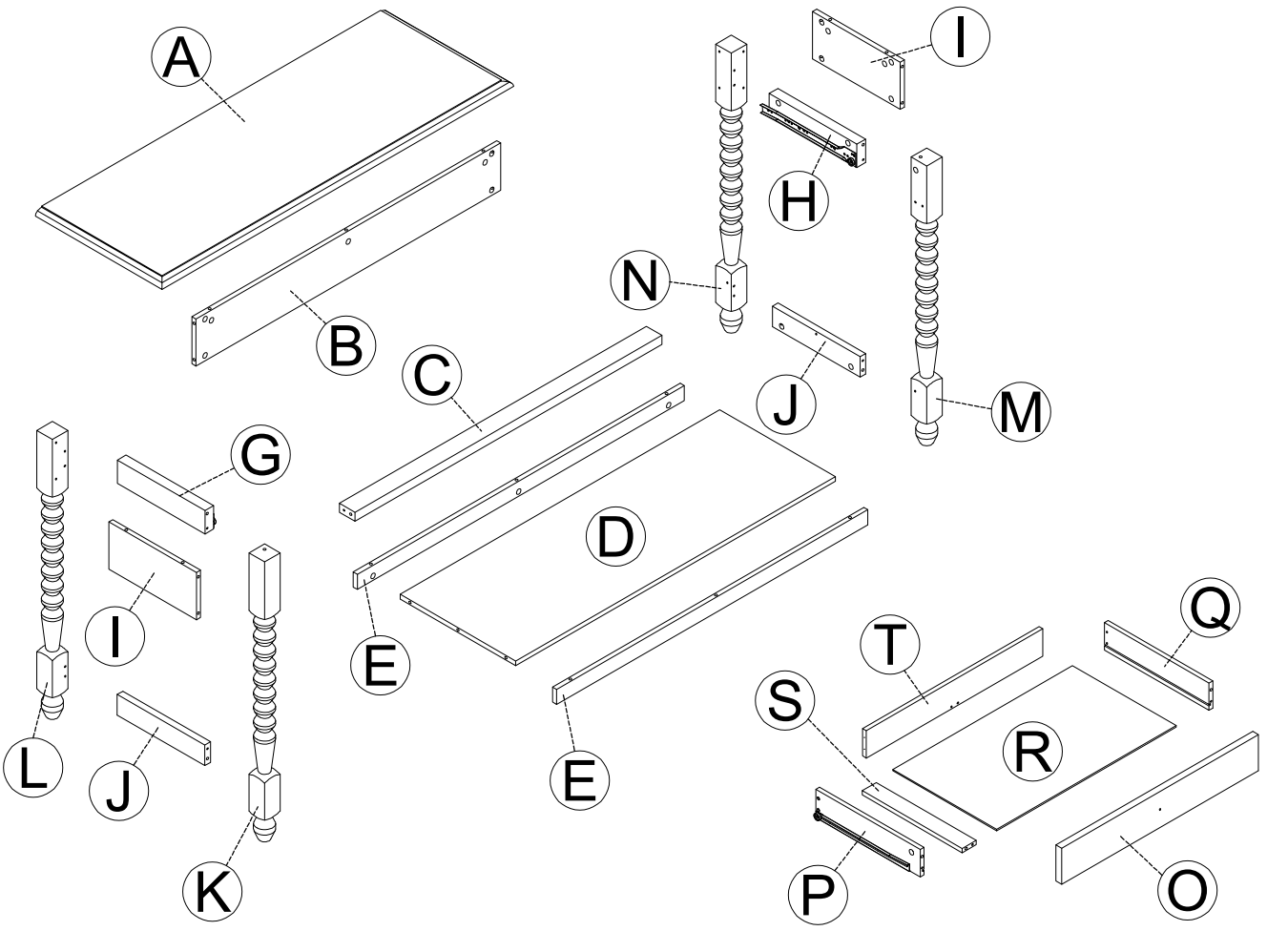

A	1	B	1	C	1	D	1	E	2	G	1	H	1
I	2	J	2	K	1	L	1	M	1	N	1	O	1
P	1	Q	1	R	1	S	1	T	1				

Identifying the hardware-*Identify the hardware using the illustrations below*

1 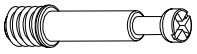 47
Ø6 x 35MM Cam Bridge

2  47
Ø15 x 9MM Cam Head

3 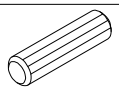 14
Ø6 x 30 Dowel

4  4
Leveler

5  1
Handle

6  1
M4 x 25 Bolt

7  4
M3.5 x 20MM Screw

ASSEMBLY DESCRIPTION

STEP 1

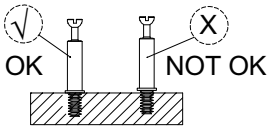

1 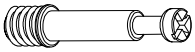 16
Ø6 x 35MM Cam Bridge

STEP 2

2  16
Ø15 x 9MM Cam Head

3 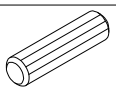 8
Ø6 x 30 Dowel

ASSEMBLY DESCRIPTION

STEP 3

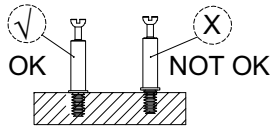

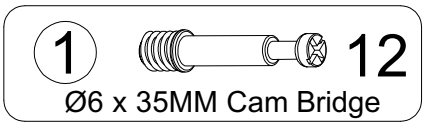

STEP 4

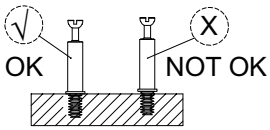

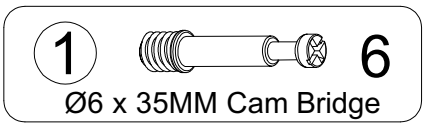

ASSEMBLY DESCRIPTION

STEP 5

2		6
Ø15 x 9MM Cam Head		

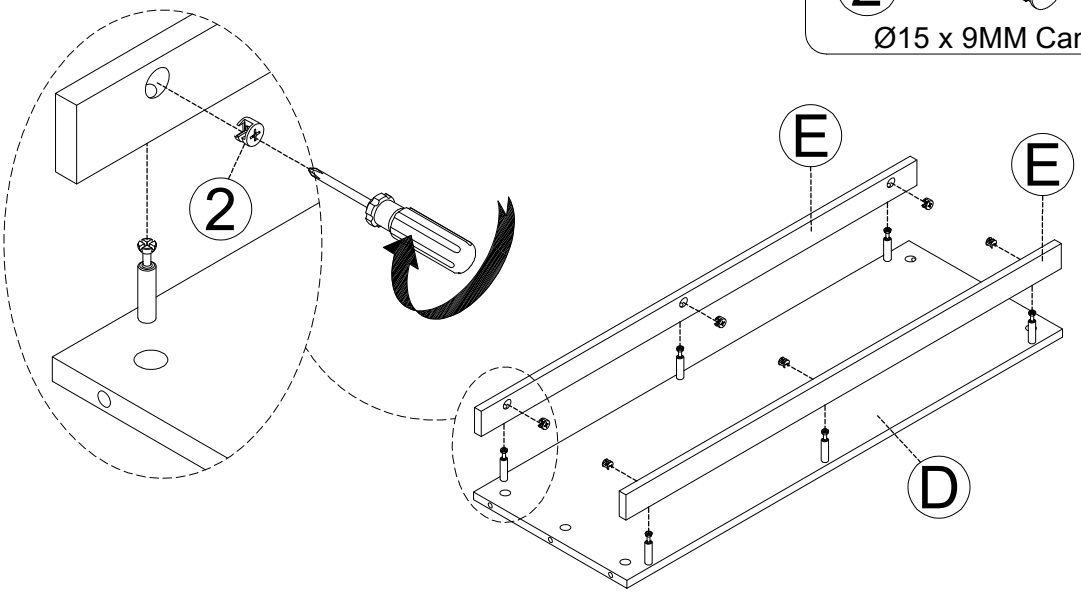

STEP 6

2		12
Ø15 x 9MM Cam Head		
3	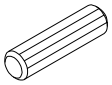	2
Ø6 x 30 Dowel		

ASSEMBLY DESCRIPTION

STEP 7

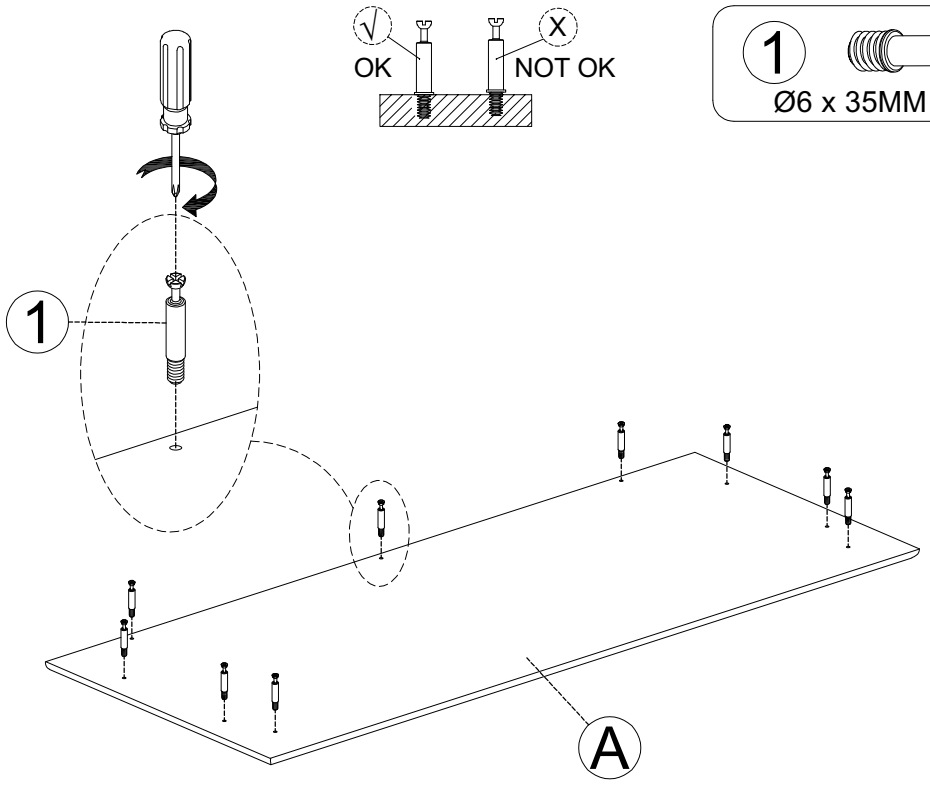

1 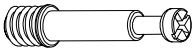 9
Ø6 x 35MM Cam Bridge

STEP 8

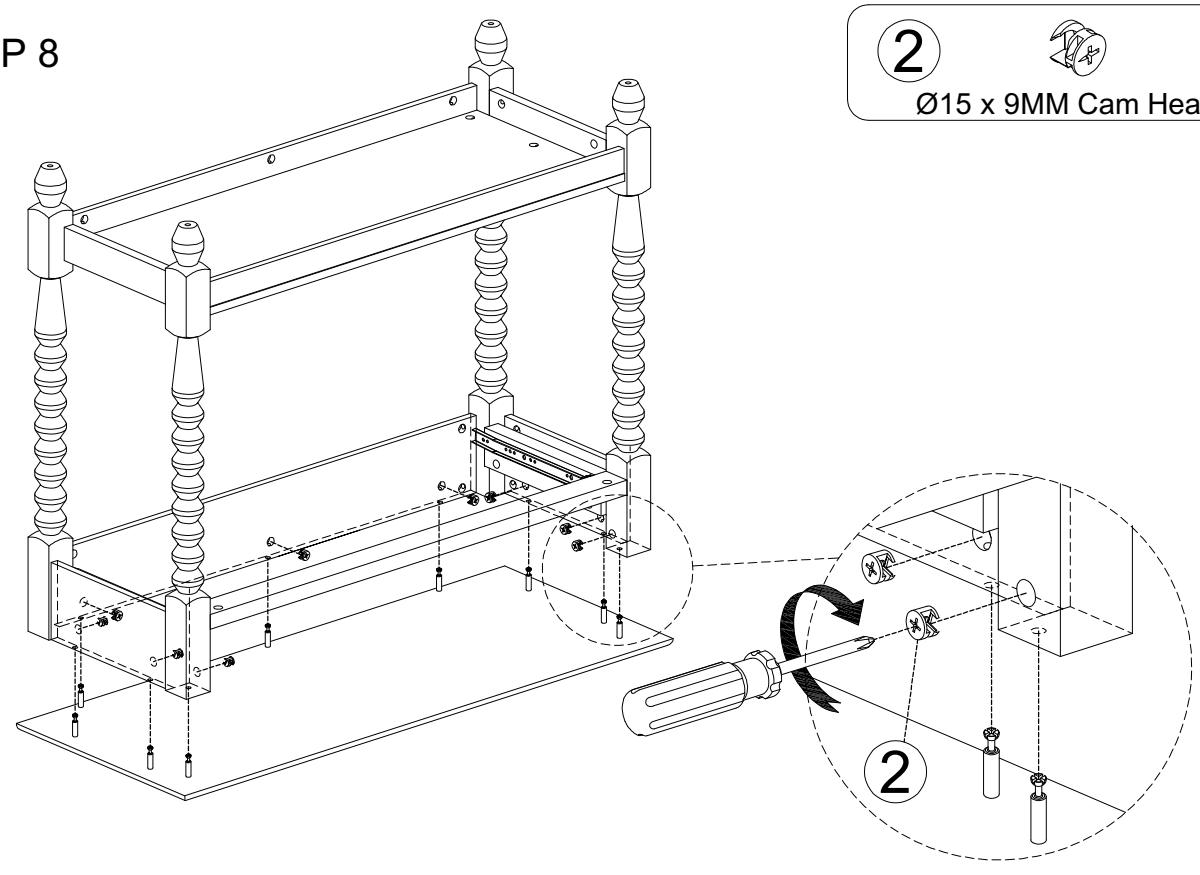

2 9
Ø15 x 9MM Cam Head

ASSEMBLY DESCRIPTION

STEP 9

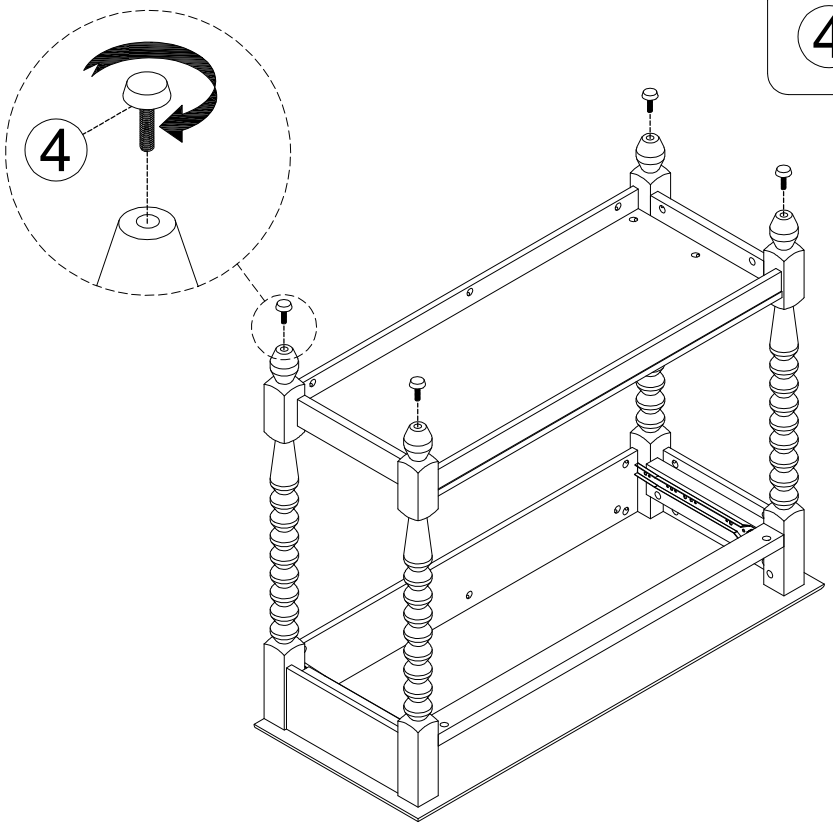

4 Leveler 4

STEP 10

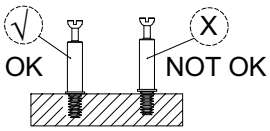

1 Ø6 x 35MM Cam Bridge 4

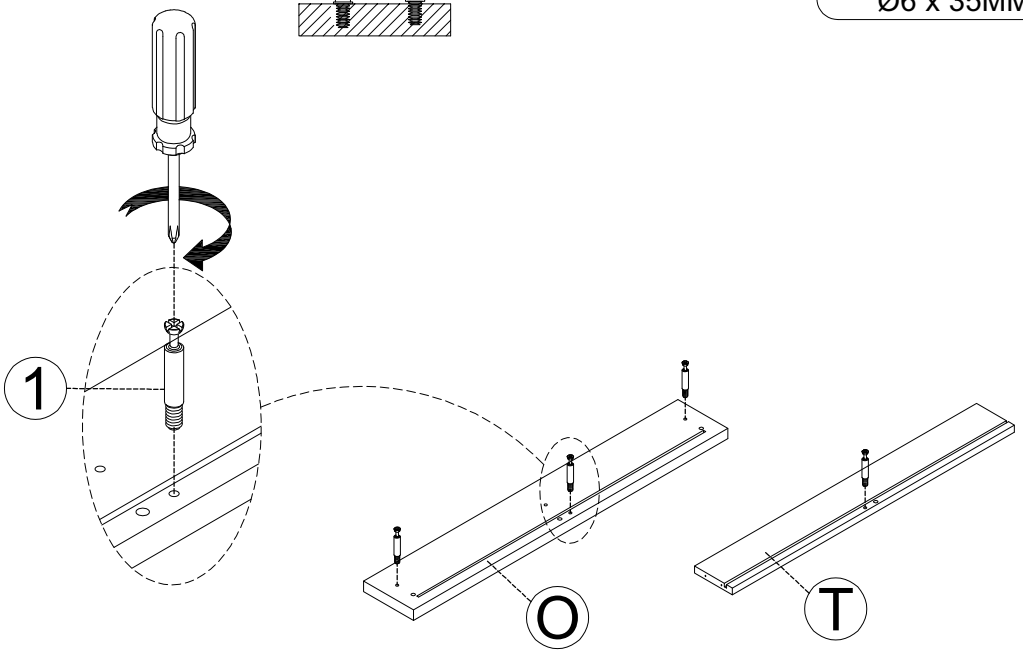

ASSEMBLY DESCRIPTION

STEP 11

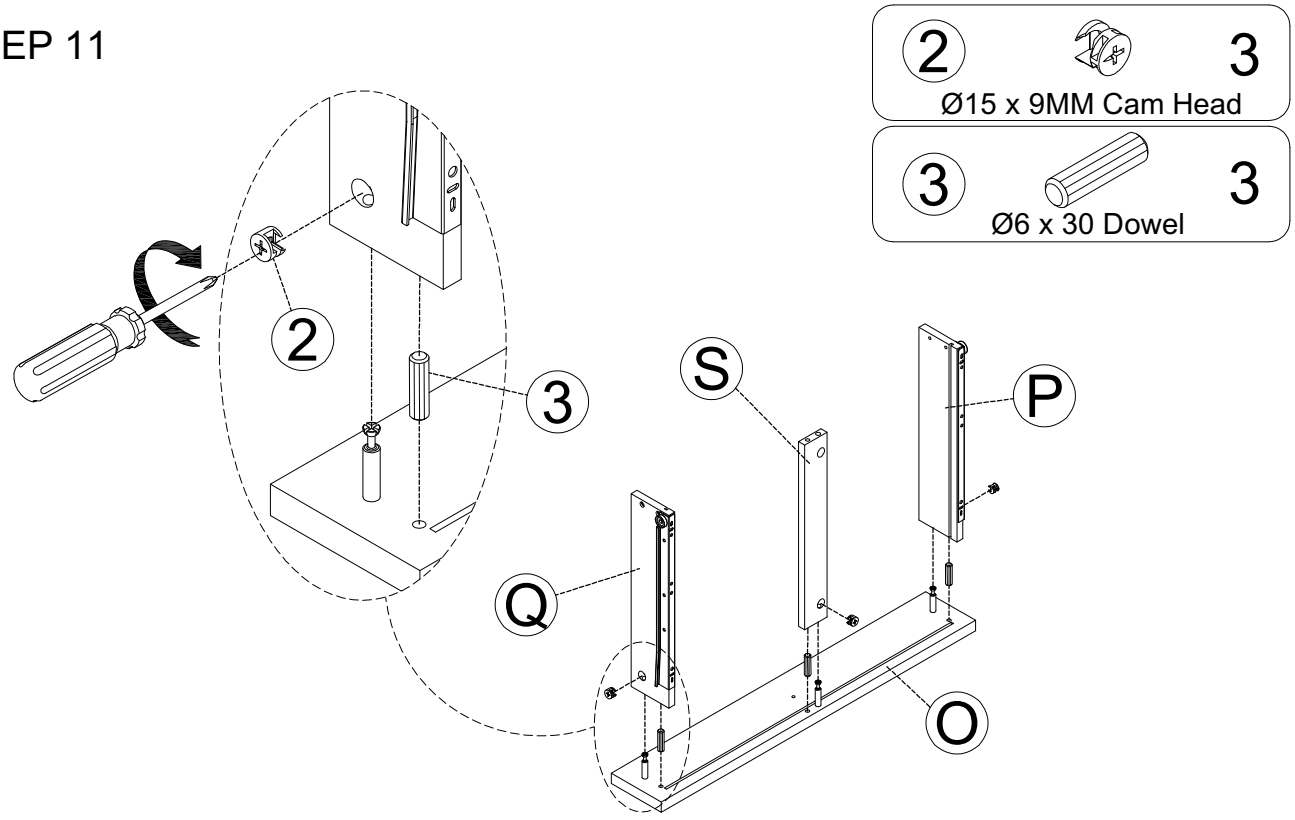

STEP 12

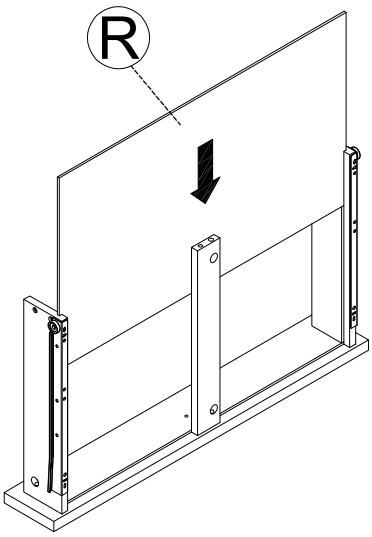

ASSEMBLY DESCRIPTION

STEP 13

2  1
Ø15 x 9MM Cam Head

3 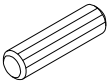 1
Ø6 x 30 Dowel

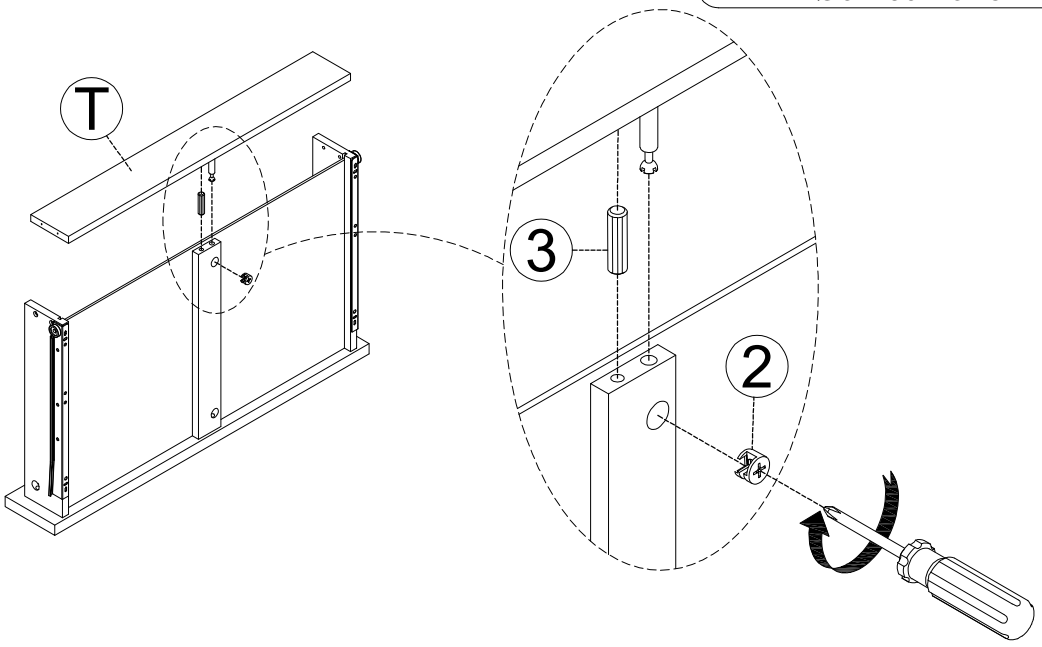

STEP 14

7  4
M3.5 x 20MM Screw

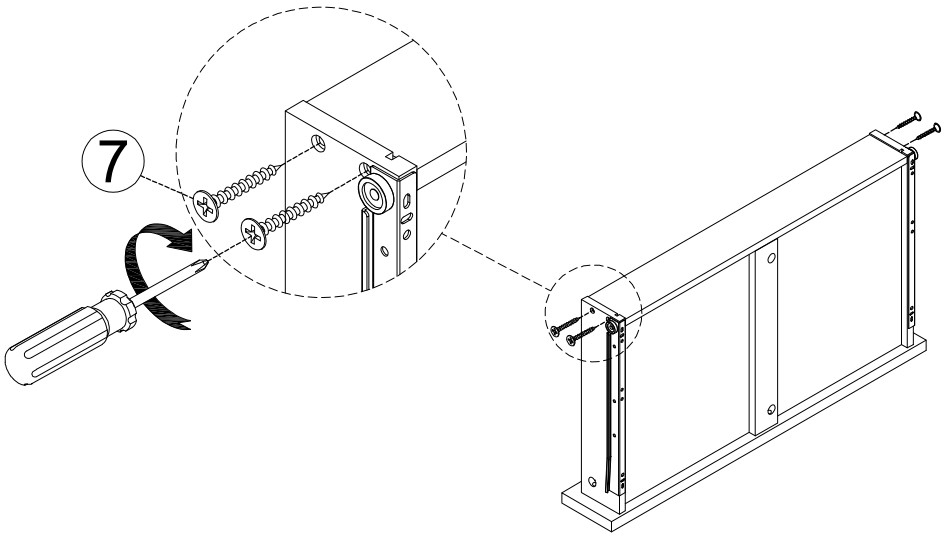

ASSEMBLY DESCRIPTION

STEP 15

