KINGSTON

TO ORDER PARTS, CALL: 1-877-252-7277
www.kingstonbrass.com

KS3040,1,2,3,5,6,7,8NDL

Single Handle Three-Way Diverter Valve with Square Trim Kit

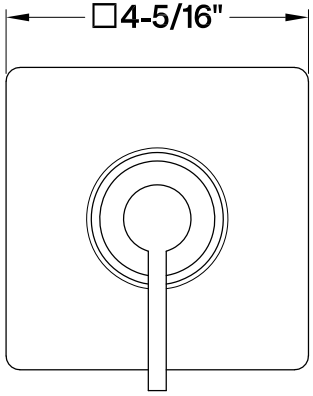

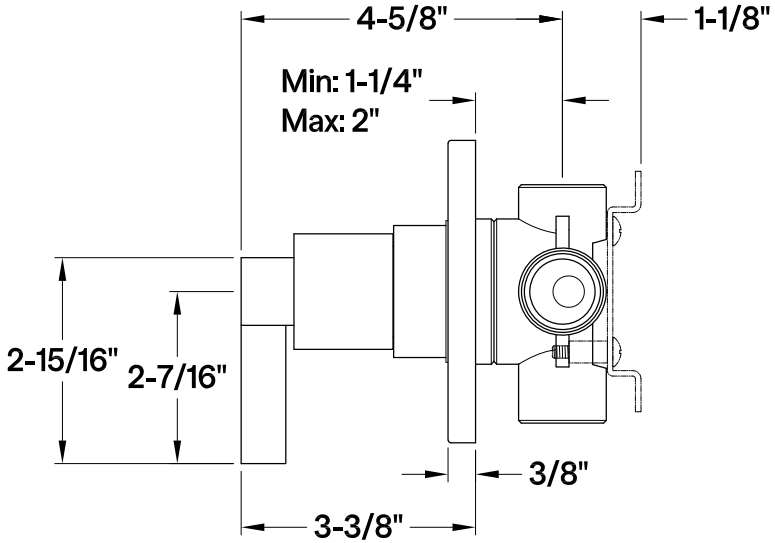

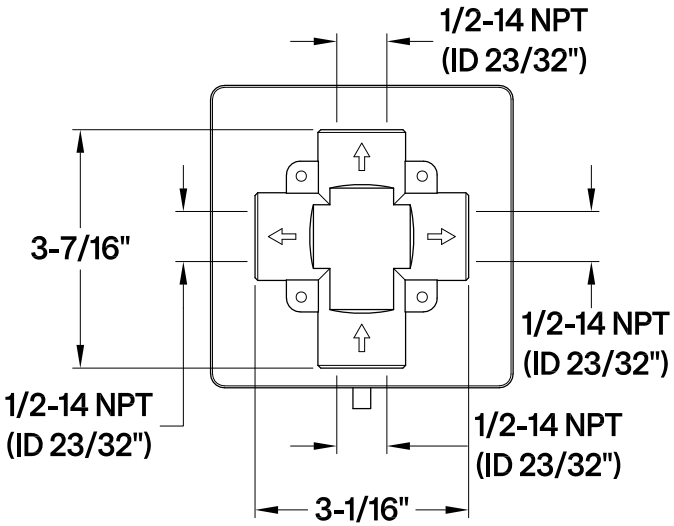

Bracket

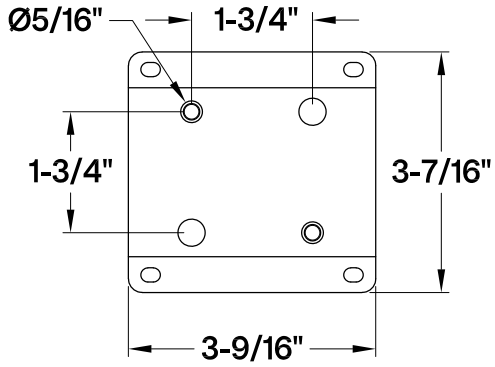

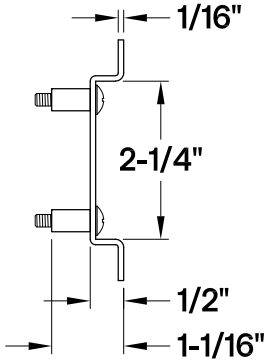

2026-05-B