KOHLER. Faucets

Castia™ by Studio McGee

Widespread bathroom sink faucet, 0.5 gpm

K-35908-4N

Features

- Designed in collaboration with Studio McGee
- Two Lever handles offer separate control of hot and cold water
- 6" (152 mm) spout reach
- 0.5 gpm (1.9 lpm) maximum flow rate at 60 psi (4.14 bar)
- KOHLER® ceramic disc valves exceed industry longevity standards for a lifetime of durable performance
- Metal touch-activated drain with 1-1/4" tailpiece
- Coordinates with other products in the Castia collection

Material

- Premium material construction for durability and reliability
- KOHLER finishes resist corrosion and tarnishing

Installation

- For 8" – 16" (203 – 406 mm) centers
- Deck-mount
- Handles are preassembled on valves to simplify installation

Adapters, Rough-in and Extension Kits

1280146	Range: 1-1/2" (38 mm) - 1-1/2" (38 mm)

Recommended Products/Accessories

K-35925 18" towel bar
K-35926 24" towel bar
K-35927 Double robe hook
K-35928 Towel ring
K-35929 Toilet paper holder
K-23726 Drain treatment

ADA	CSA B651	OBC

Codes/Standards

ASME A112.18.1/CSA B125.1
NSF/ANSI/CAN 61
NSF/ANSI/CAN 372
DOE - Energy Policy Act 1992
California Energy Commission (CEC)
ADA
ICC/ANSI A117.1
CSA B651
OBC

KOHLER® Faucet Lifetime Limited Warranty

See website for detailed warranty information.

Available Colors/Finishes

Color tiles intended for reference only.

Color	Code	Description
	CP	Polished Chrome
	SN	Vibrant® Polished Nickel
	BN	Vibrant® Brushed Nickel
	BL	Matte Black
	2MB	Vibrant® Brushed Moderne Brass

KOHLER Faucets

Castia™ by Studio McGee

Widespread bathroom sink faucet, 0.5 gpm

K-35908-4N

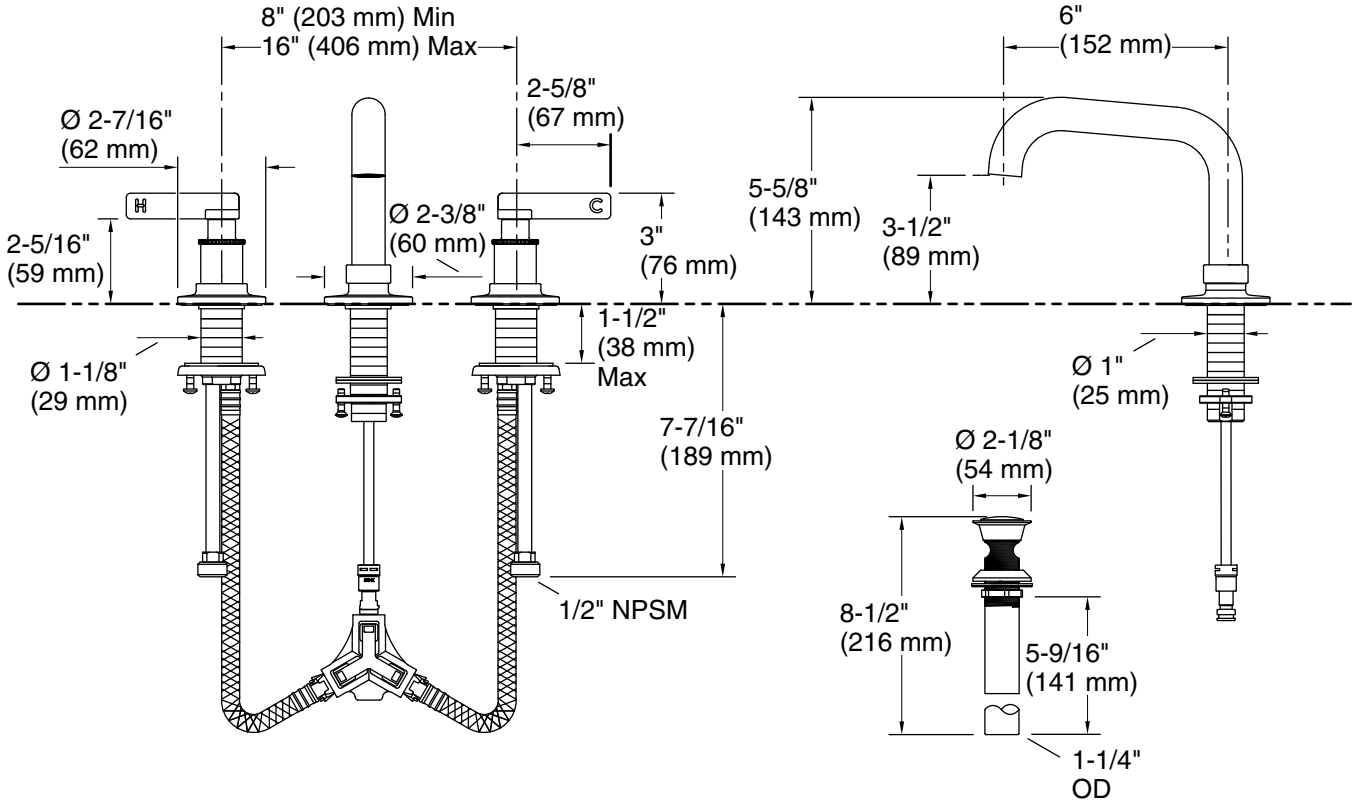

Technical Information

All product dimensions are nominal.

Faucet flow rate:	0.5 gal/min (1.9 l/min)
Drain included:	Yes
Drain with overflow:	Yes
Drain tailpiece included:	Yes

Spout:

Spout reach:	6" (152 mm)

Notes

Install this product according to the installation instructions.

ADA, OBC, CSA B651 compliant when installed to the specific requirements of these regulations.