TEAR SHEET

Goodman Medium Hanging Light

Item # TOB 5091HAB-AW

Designer: Thomas O'Brien

O/A Height: 43"
Fixture Height: 18.5"
Min. Custom Height: 26.75"
Width: 18"
Canopy: 5" Round
Finishes: AN, BZ, BZ/HAB, HAB
Shade Treatments: AN, ASH, AW, BZ, HAB, L, NAB, TST
Shade Details: 6.5" x 18" x 16.5"
Socket: E26 Keyless
Wattage: 100 A19
Weight: 9 Pounds

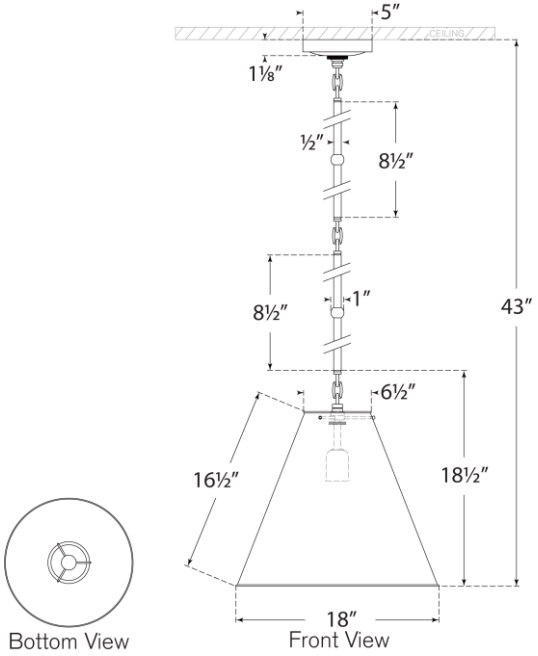

VISUAL COMFORT & CO.