ASSEMBLY INSTRUCTIONS

4-DRAWER CHEST

A Top Panel

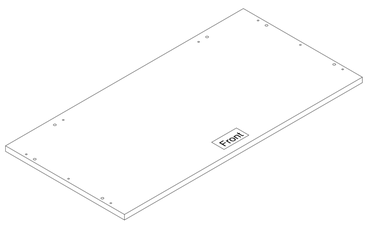

B Left Side Panel

C Right Side Panel

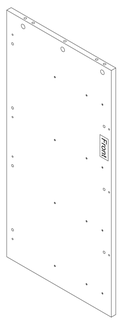

D Bottom Frame

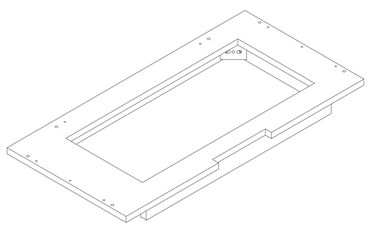

1pc

E Back Top Panel

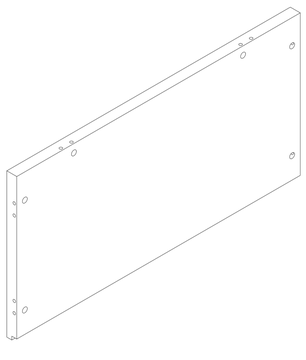

1pc

F Back Bottom Panel

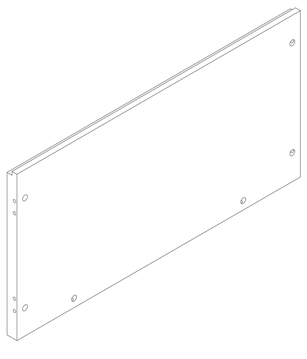

1pc

G Center Bar

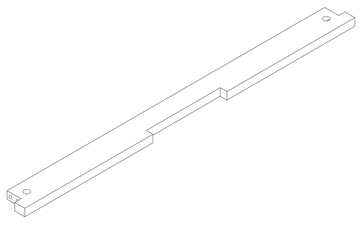

1pc

H Leg

1pc

I Left Drawer Side

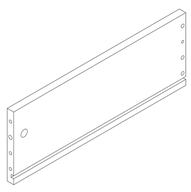

1pc

J Right Drawer Side

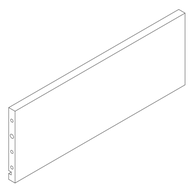

3pcs

K Top & Bottom Drawer Front

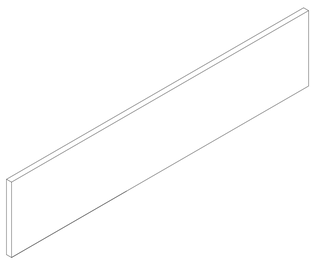

4pcs

L Center Drawer Front

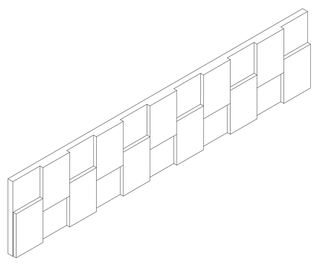

4pcs

M Drawer Back

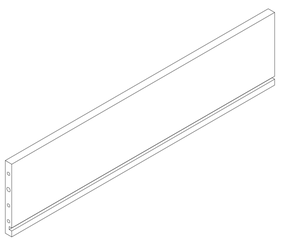

4pcs

N Drawer Base

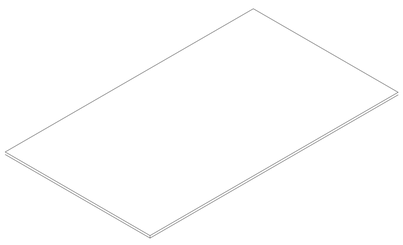

3pcs

O Runner 300mm

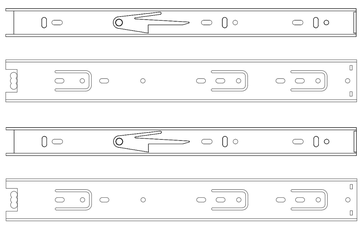

1pc

P Dowel M6 x 30mm

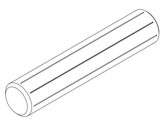

4pcs

Q Dowel M8 x 35mm

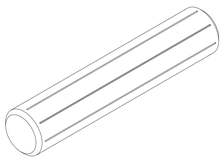

26pcs

4pcs

R Cam Bolt 5 x 25mm

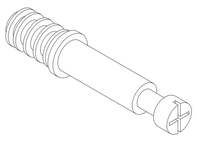

40pcs

4sets

S Cam Lock 15 x 12mm

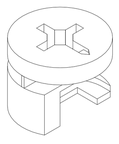

40pcs

48pcs

T Cam Lock Cover 17 x 5mm

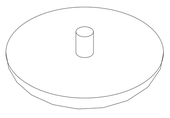

40pcs

U Screw
M3 x 16mm

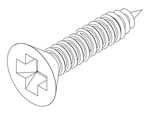

48pcs

V Screw
M4 x 38mm

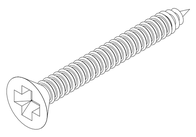

6pcs

W JCBC Screw
M6 x 45mm

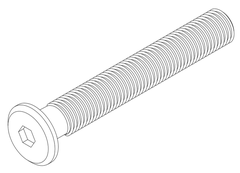

4pcs

X Spring Washer
M6

4pcs

Y Flat Washer
M6

4pcs

Z Allen Key
M4

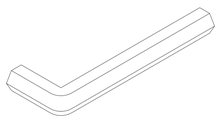

1pc

AA Anti-Tip Kit

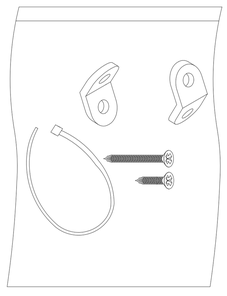

1set

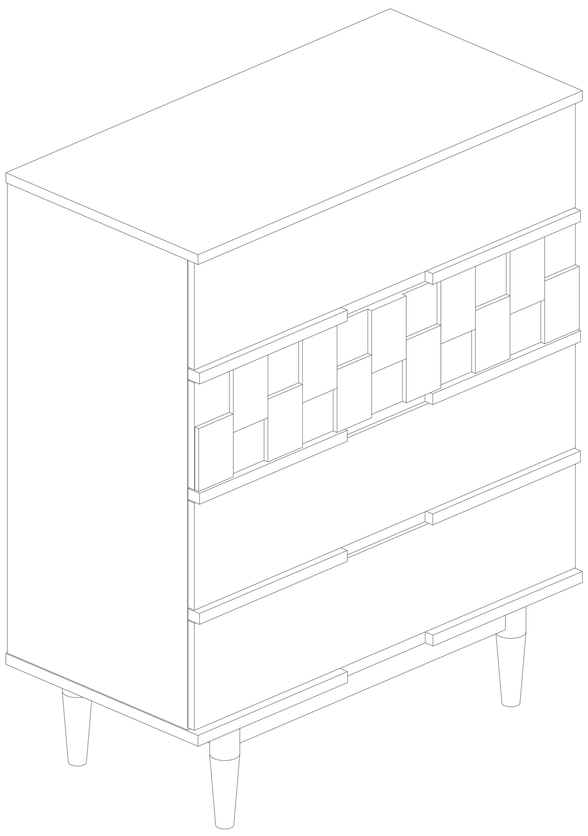

These pages list all the contents included in the box. Please take the time to identify the hardware as well as the individual components to this product. As you unpack and prepare for assembly, place the contents on a carpeted or padded area to protect them from damage.

1 Insert Cam Bolt (R) into the Top Panel (A) with a screwdriver (not provided).

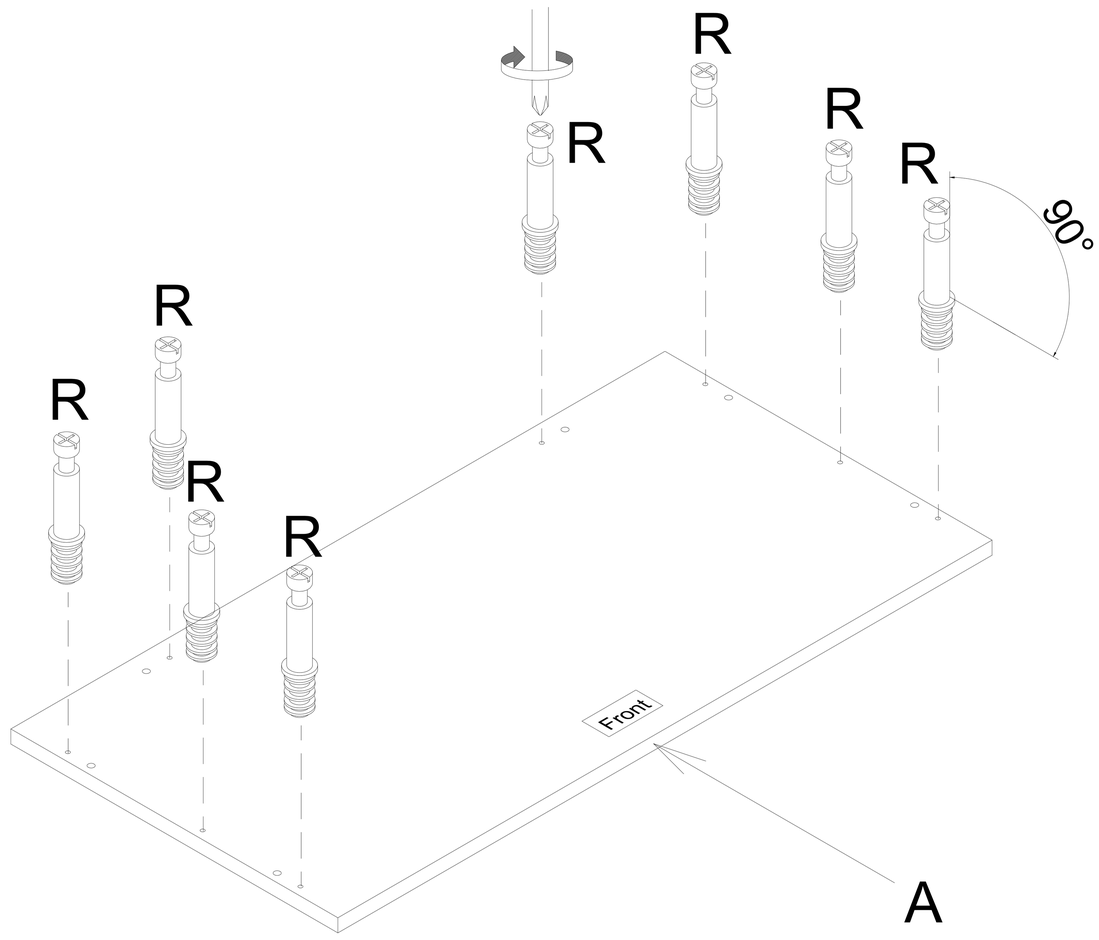

2 Insert Dowel (Q), Cam Bolt (R) and Cam Lock (S) into the Left & Right Side Panel (B & C) with a screwdriver (not provided).

NOTE : - Ensure the arrows on each Cam Lock (S) point towards the nearest edge with holes.

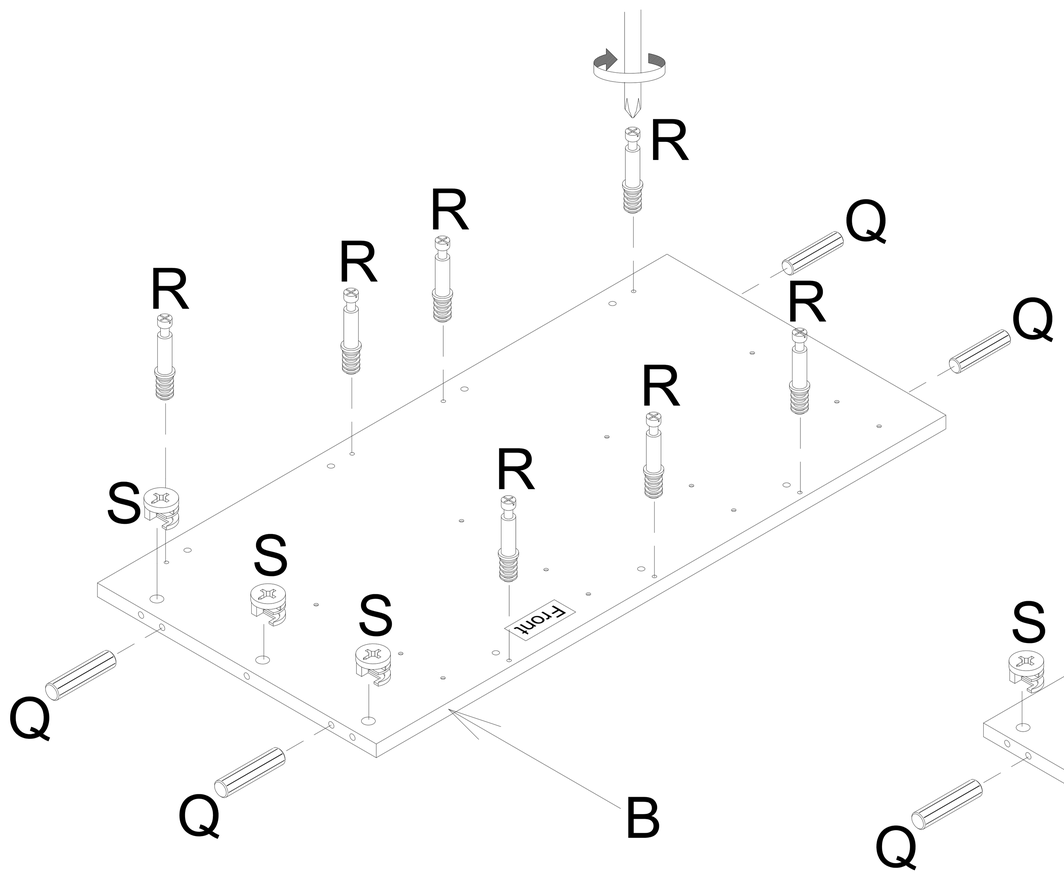

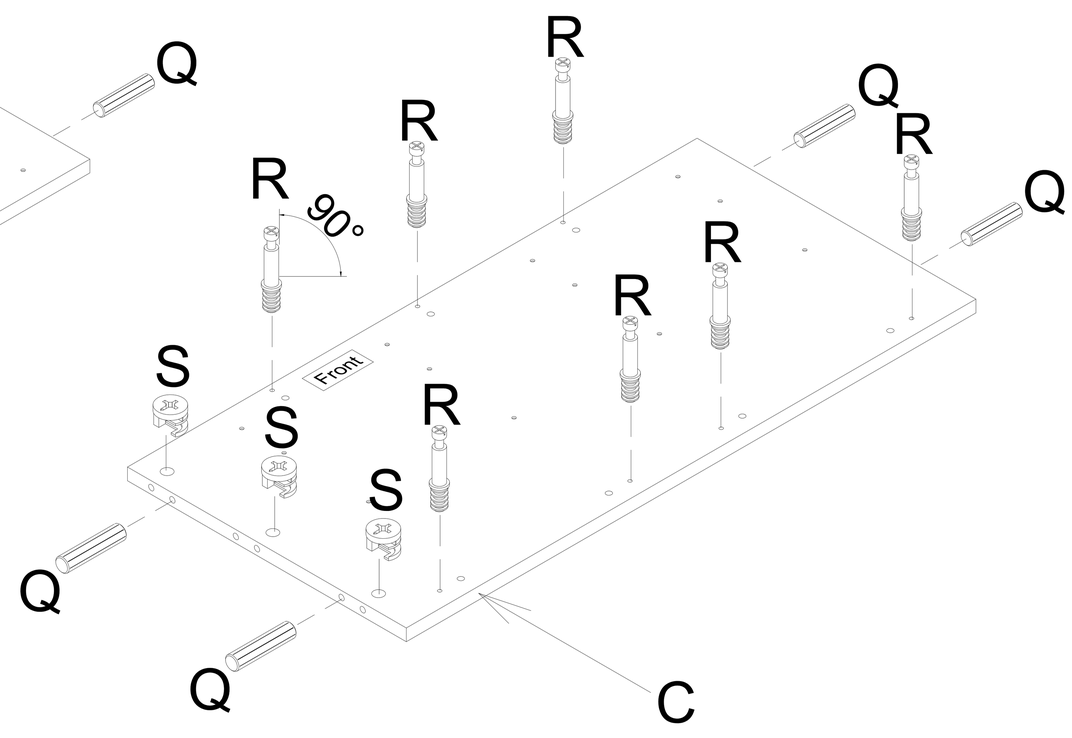

3 Disassemble the Runner (O) into two parts. Attach one part with runner rollers to the Left & Right Side Panel (B & C) using Screw (U) with a screwdriver (not provided). Attach the other part with slides to the Left & Right Drawer Side (I & J).

NOTE : - Runner (O) should face the front of the panel.
- Assemble Screw (U) from the front of the runner, starting with U^1, U^2, then U^3.
- Ensure screws are installed vertically without tilting to fit properly into the holes.

EXTENSION RUNNER DISASSEMBLE STEPS:

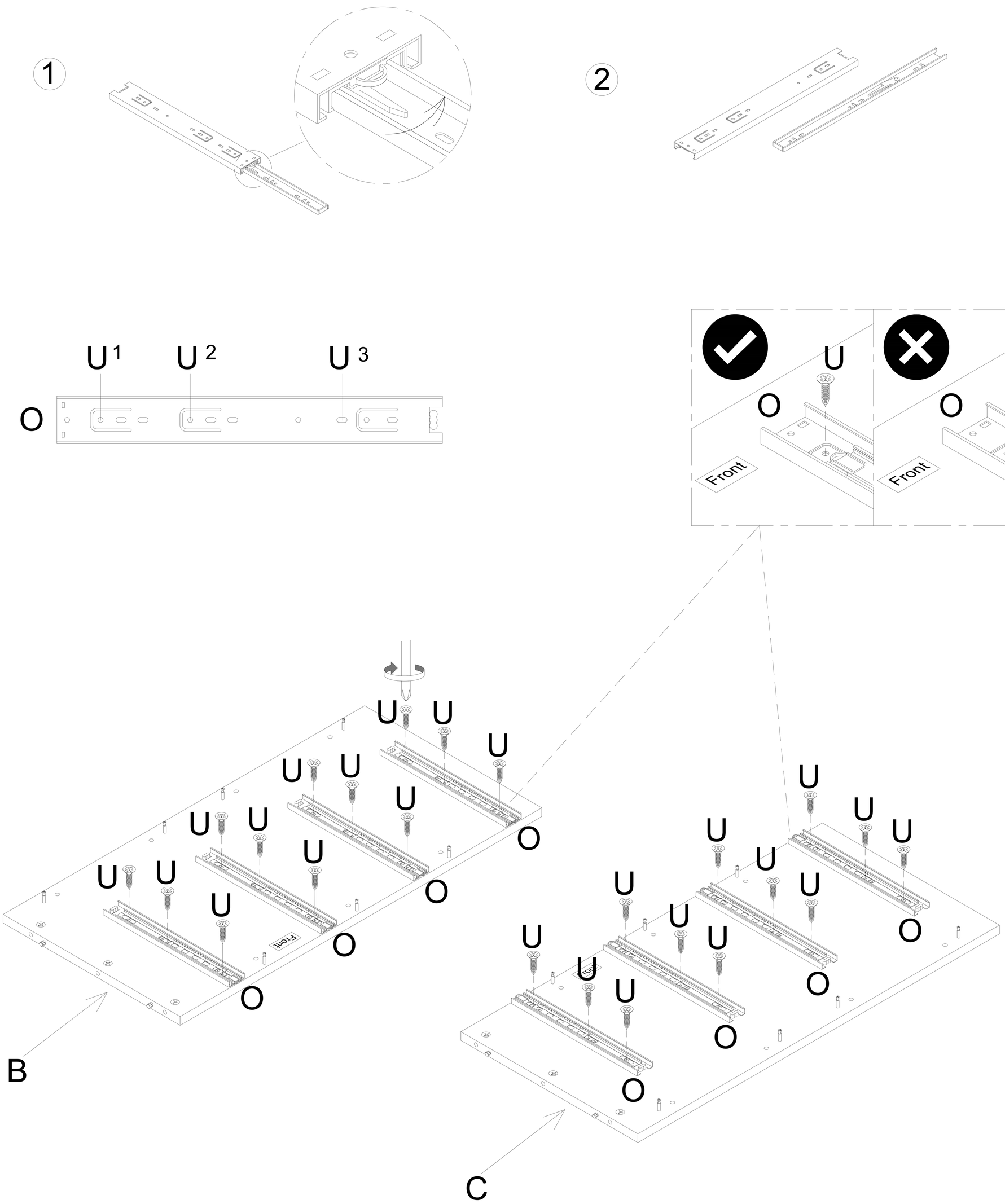

4

Insert Cam Bolt (R) into the Bottom Frame (D) with a screwdriver (not provided). Then, flip over the Bottom Frame (D) and attach the Leg (H) using JCBC Screw (W), Spring Washer (X) and Flat Washer (Y) with the Allen Key (Z).

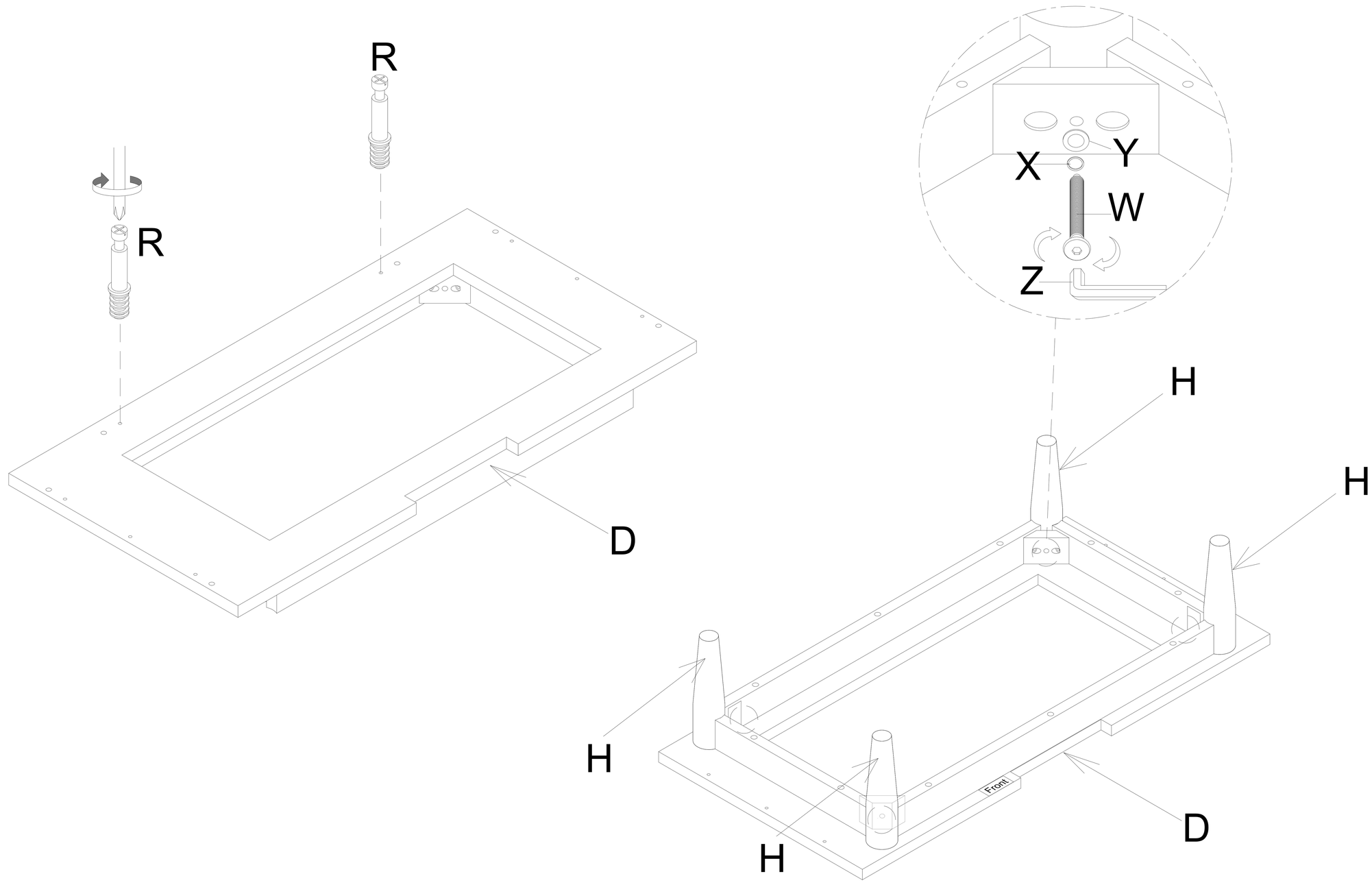

5

Attach Dowel (Q) and Cam Lock (S) to the Back Top Panel (E), the Back Bottom Panel (F) and the Center Bar (G).

NOTE : - Ensure the arrows on each Cam Lock (S) point towards the nearest edge with holes.

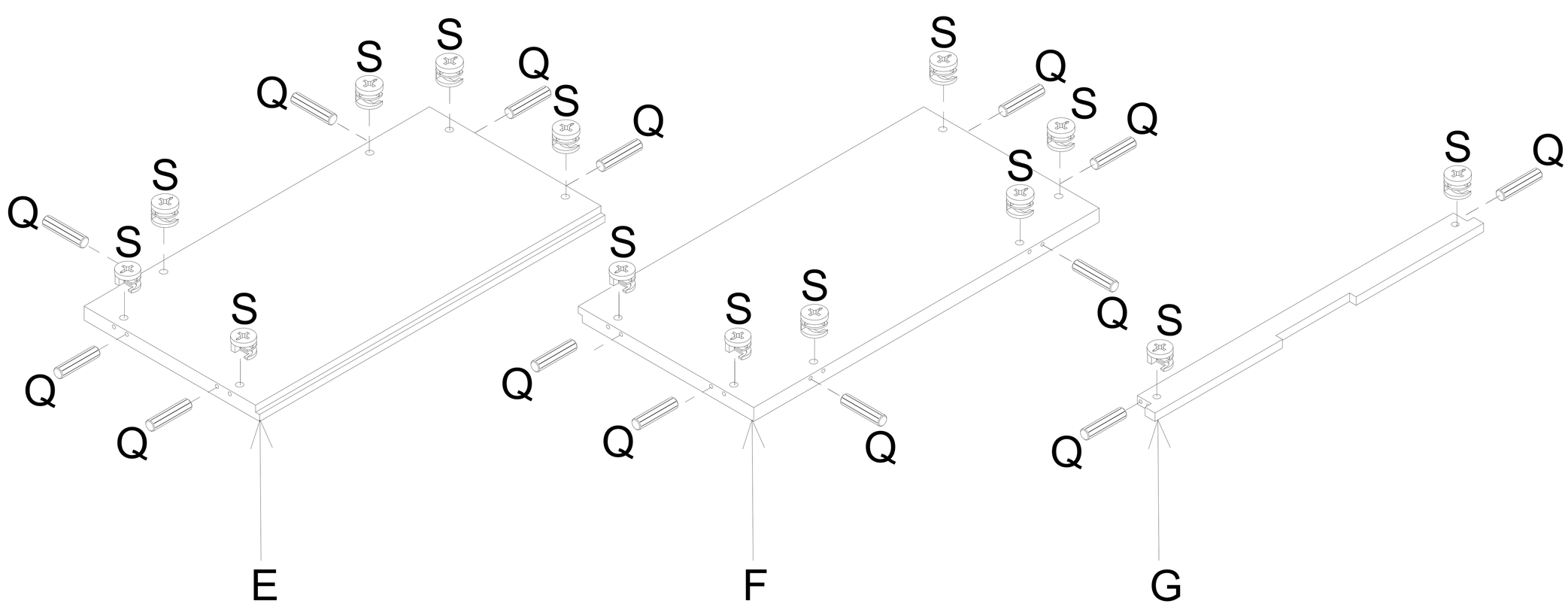

6 Attach the Left & Right Side Panel (B & C) to the Back Left & Right Panel (E & F), then attach the Center Bar (G) to the Left & Right Side Panel (B & C) and secure the Cam Lock (S) with a screwdriver (not provided). Cover the Cam Lock (S) with Cam Lock Cover (T).

NOTE : - Do not over tighten the Cam Lock (S).

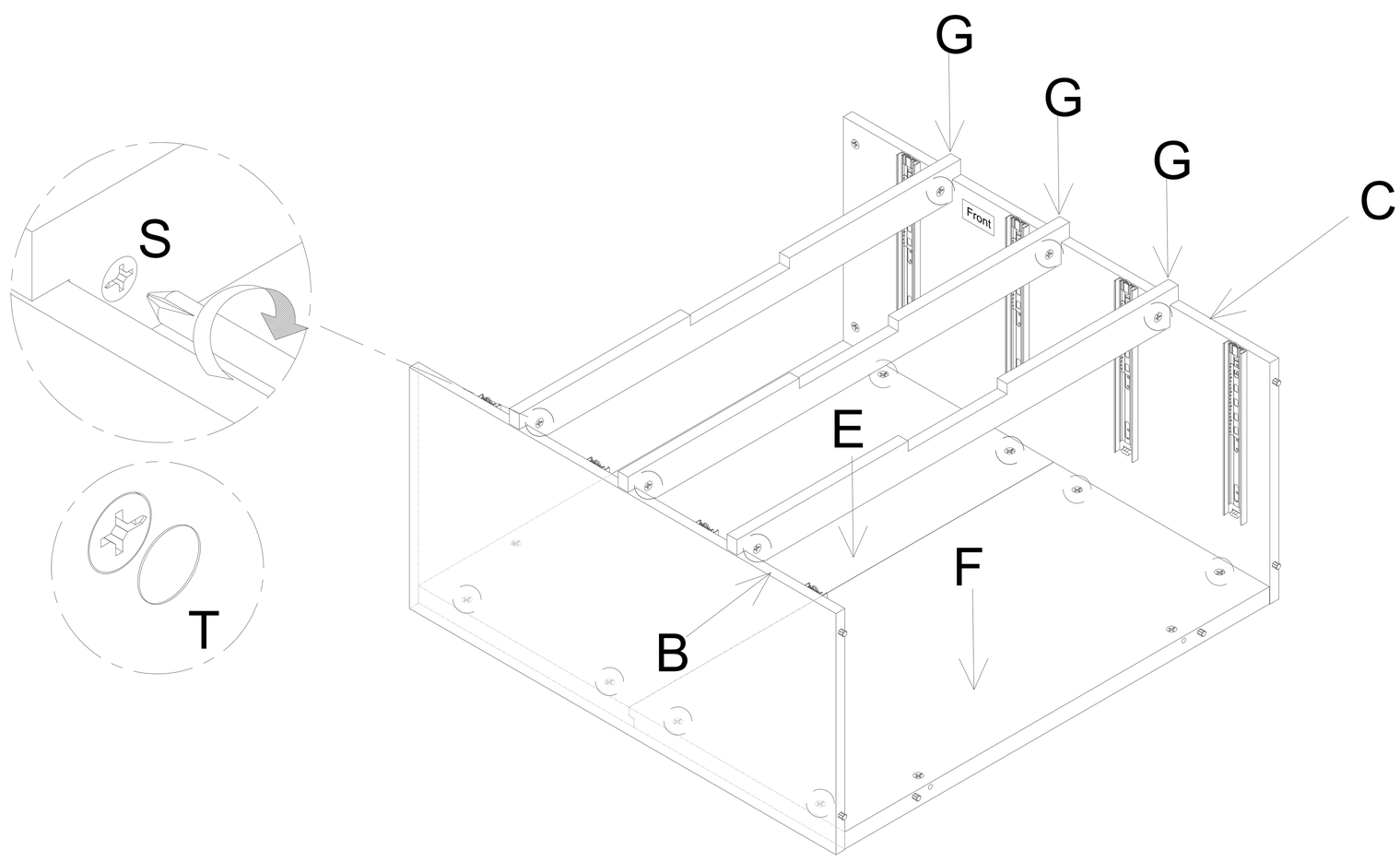

7 Attach the Back Bottom Panel (F) to the Left & Right Side Panel (B & C) and secure the Cam Lock (S) with a screwdriver (not provided). Cover the Cam Lock (S) with Cam Lock Cover (T). Then, attach the Bottom Frame (D) to the Left & Right Side Panel (B & C) using Screw (V) with a screwdriver (not provided).

NOTE : - Do not over tighten the Cam Lock (S) and Screw (V).

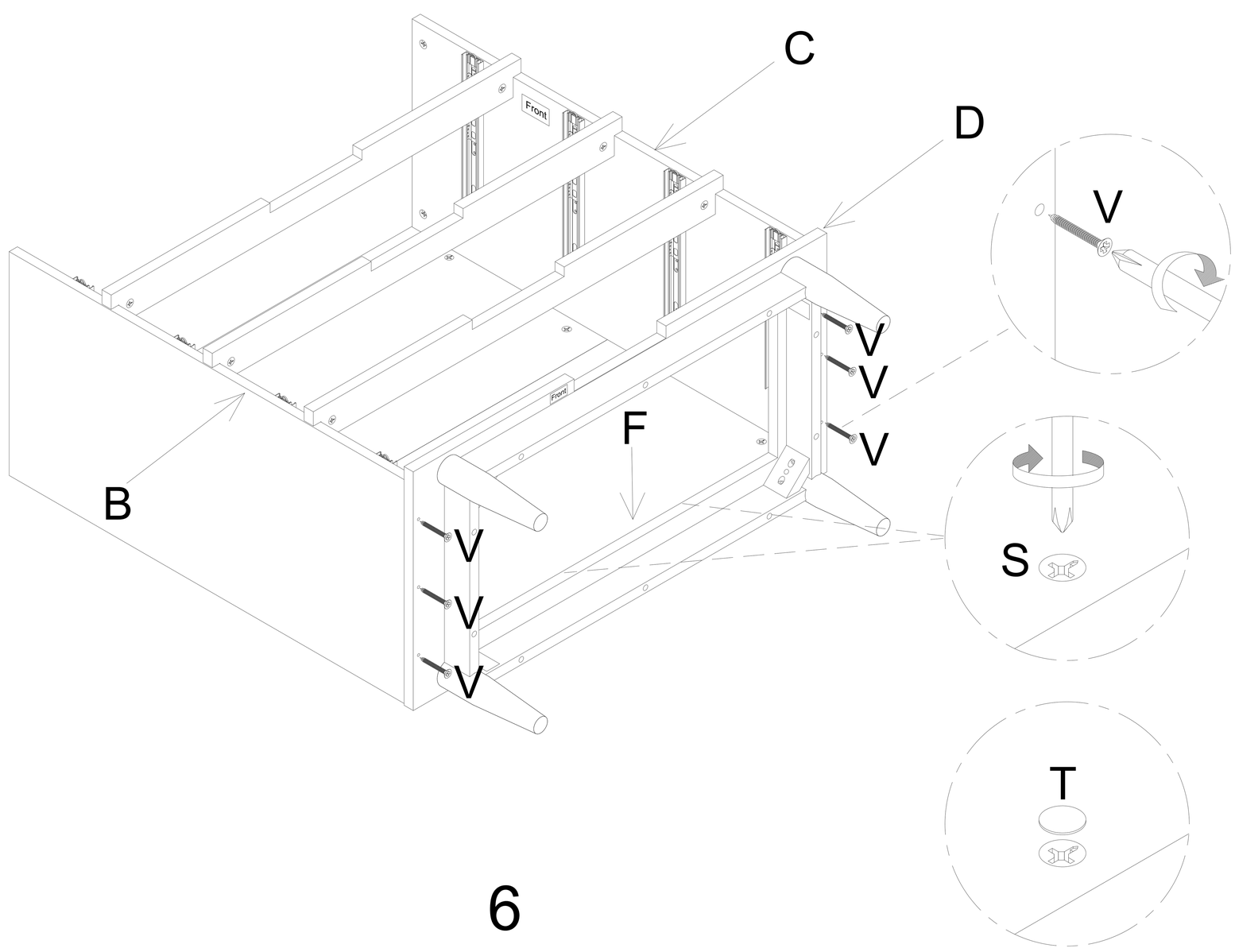

8 Attach the Top Panel (A) to the Left & Right Side Panel (B & C) and the Back Top Panel (E) and secure the Cam Lock (S) with a screwdriver (not provided). Cover the Cam Lock (S) with Cam Lock Cover (T).

NOTE : - Do not over tighten the Cam Lock (S).

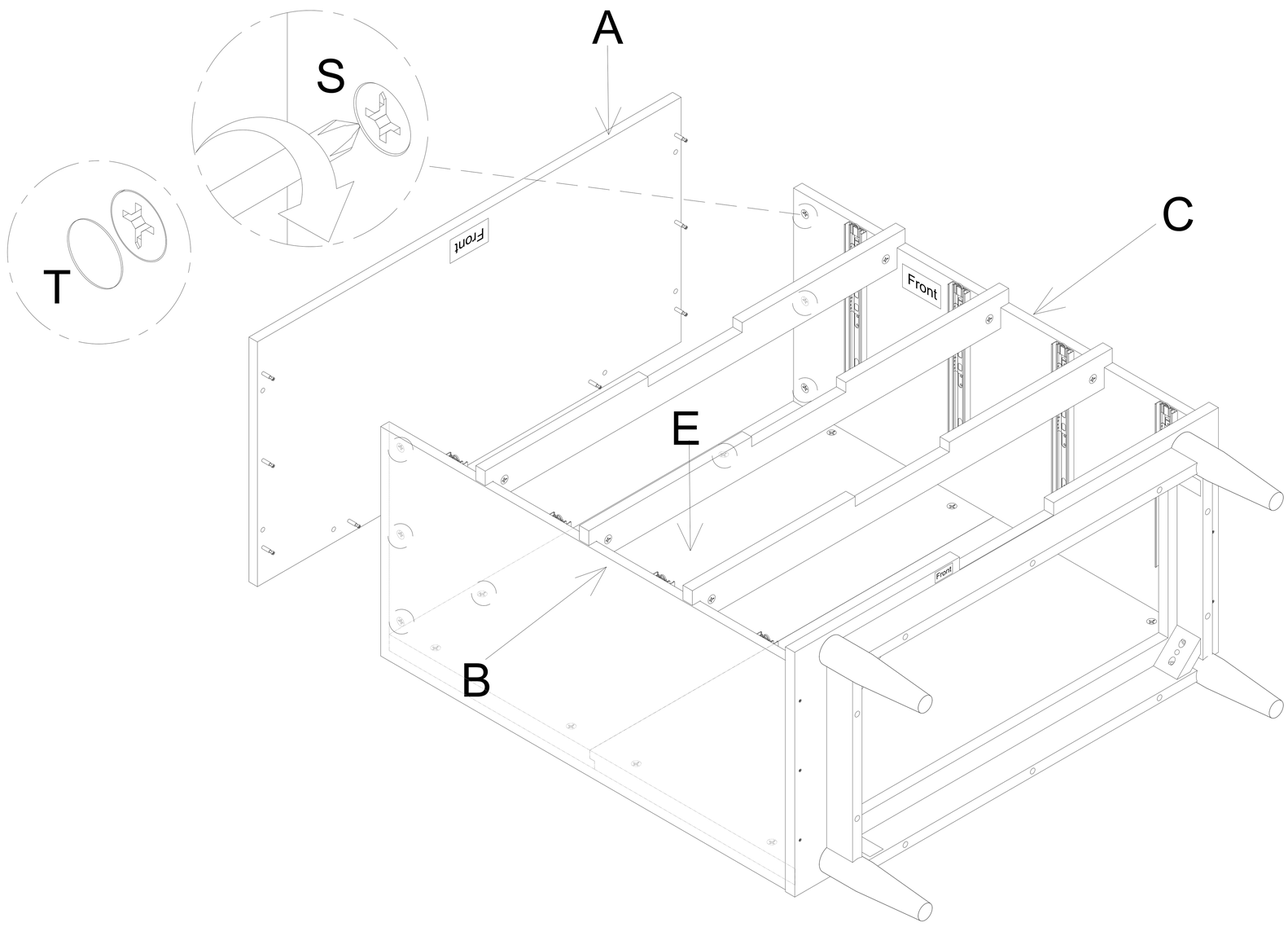

9 Attach Runner (O) to the Left & Right Drawer Side (I & J) using Screw (U) with a screwdriver (not provided).

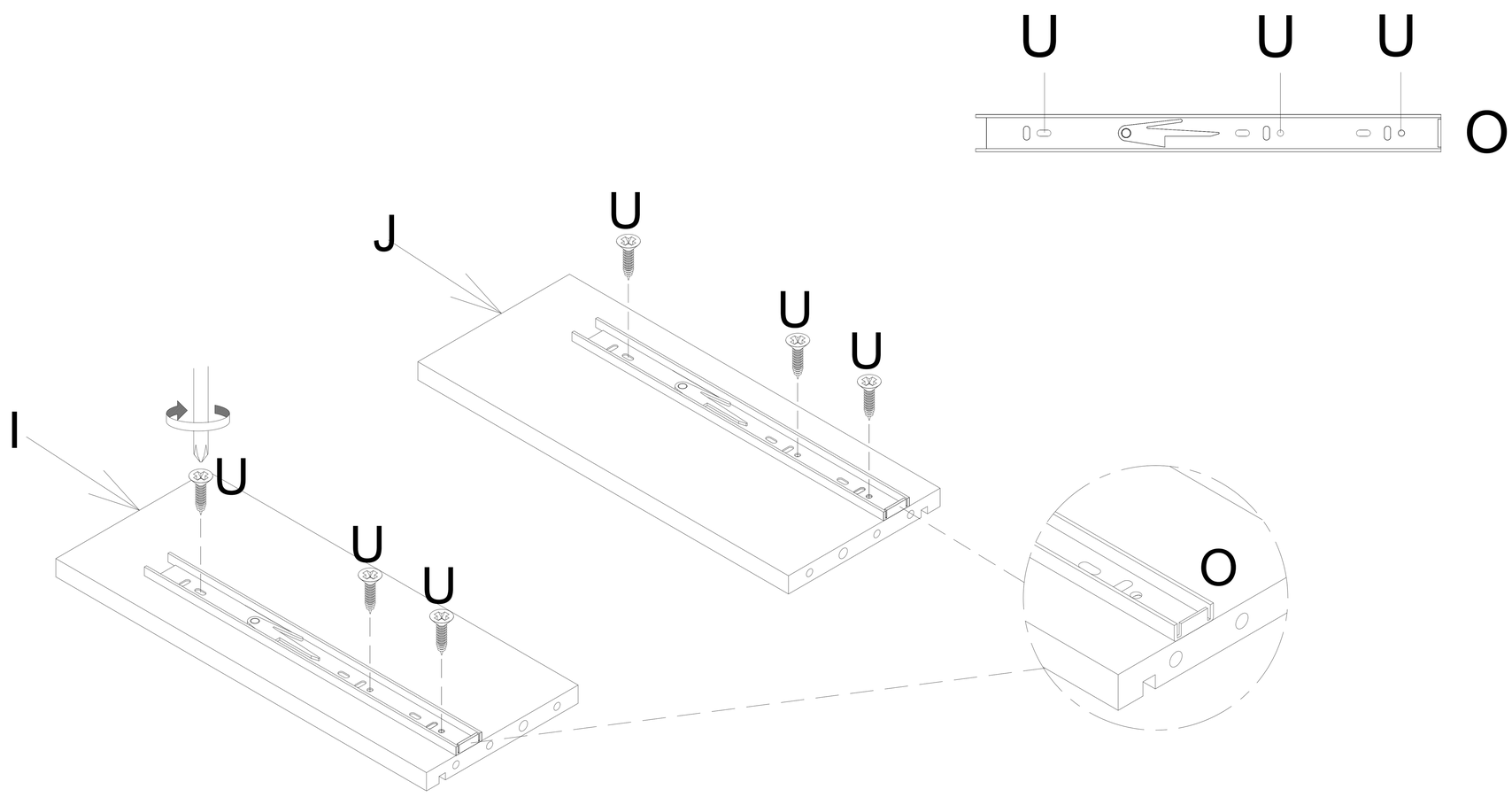

10 Attach Dowel (P) and Cam Lock (S) to the Left & Right Drawer Side (I & J) and the Drawer Back (M). Attach Cam Bolt (R) to the Left & Right Drawer Side (I & J) and the Top & Bottom Drawer Front (K) and Center Drawer Front (L) with a screwdriver (not provided).

NOTE : - Ensure the arrows on each Cam Lock (S) point towards the nearest edge with holes.

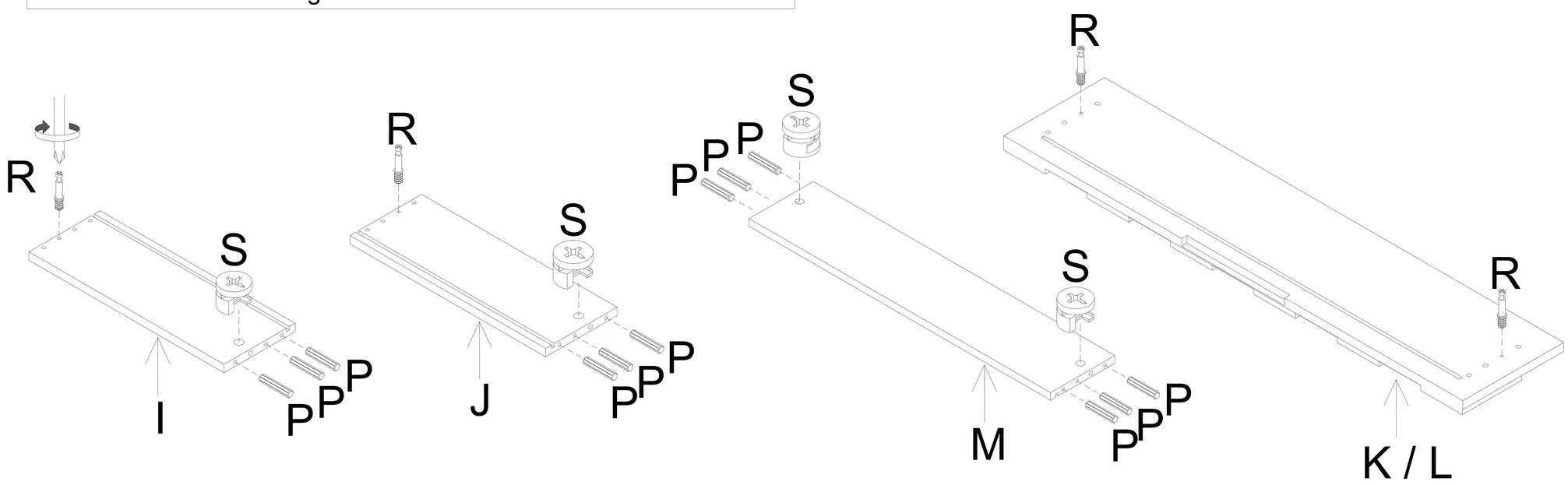

11 Attach the Left & Right Drawer Side (I & J) to the Drawer Back (M) and secure the Cam Lock (S) with a screwdriver (not provided). Cover the Cam Lock (S) with Cam Lock Cover (T).

NOTE : - Do not over tighten the Cam Lock (S).

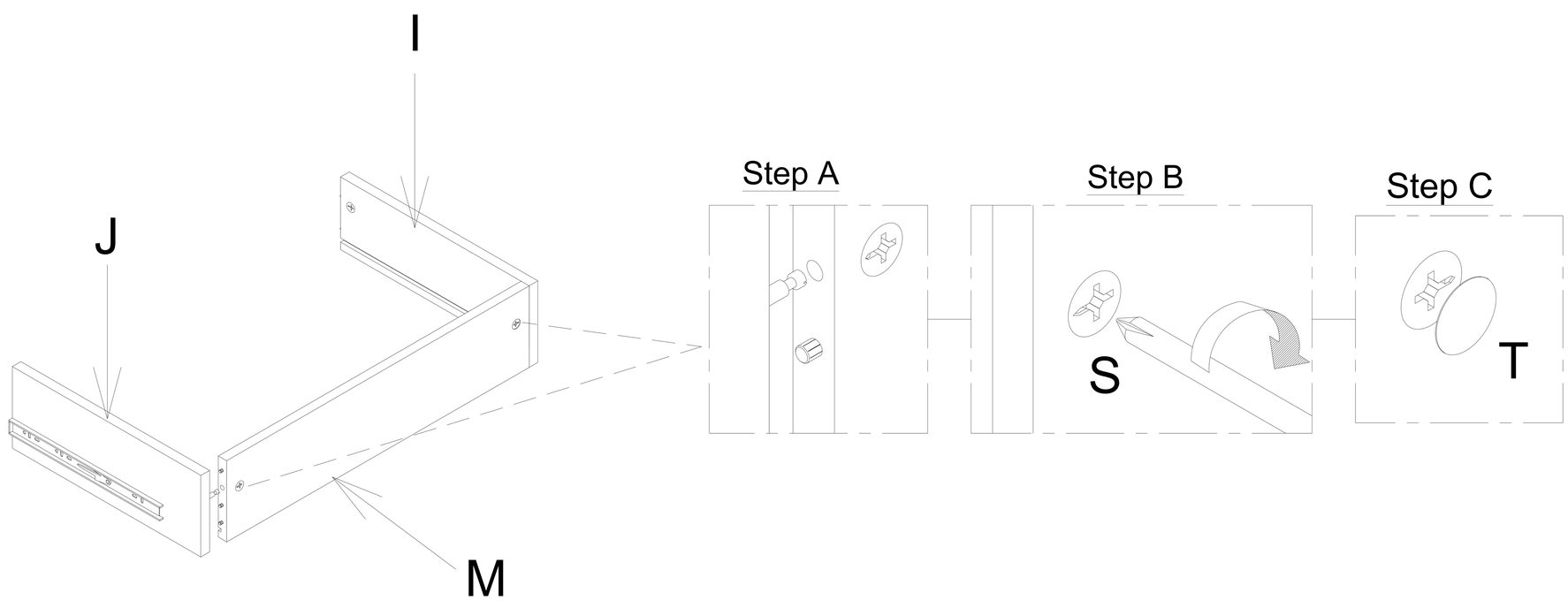

12 Slot the Drawer Base (N) into the grooves of the drawer box. Attach the Top & Bottom Drawer Front (K) and Center Drawer Front (L) to the drawer box and secure the Cam Lock (S) with a screwdriver (not provided). Cover the Cam Lock (S) with Cam Lock Cover (T).

NOTE : - Do not over tighten the Cam Lock (S).

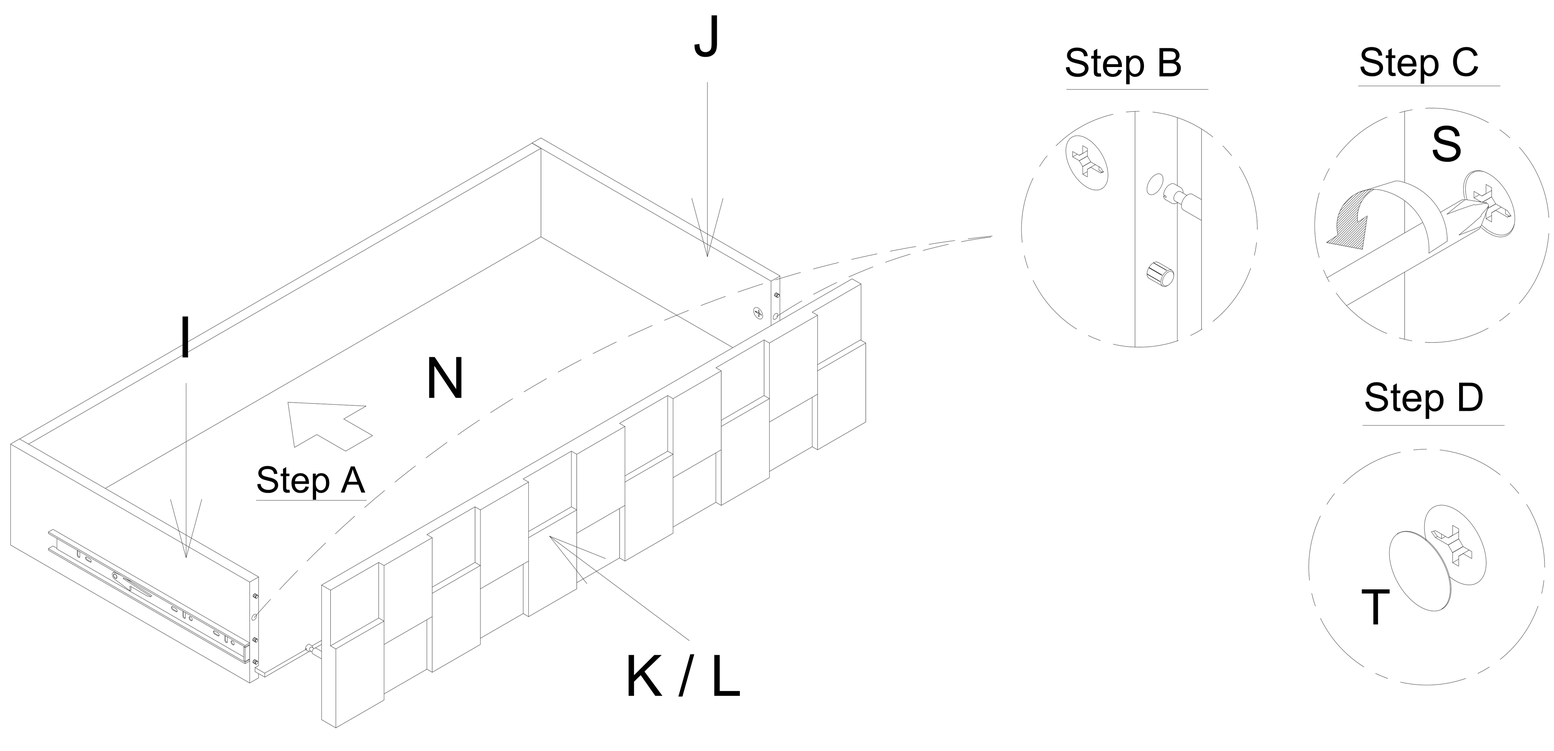

13 Pull out the metal chrome plates from both sides of the Runner (O). Align the metal chrome plates with the slides on one drawer side, then repeat on the other side. If they are not aligned properly, remove and try again. Once both tracks are aligned properly, slowly push the drawer all the way in.

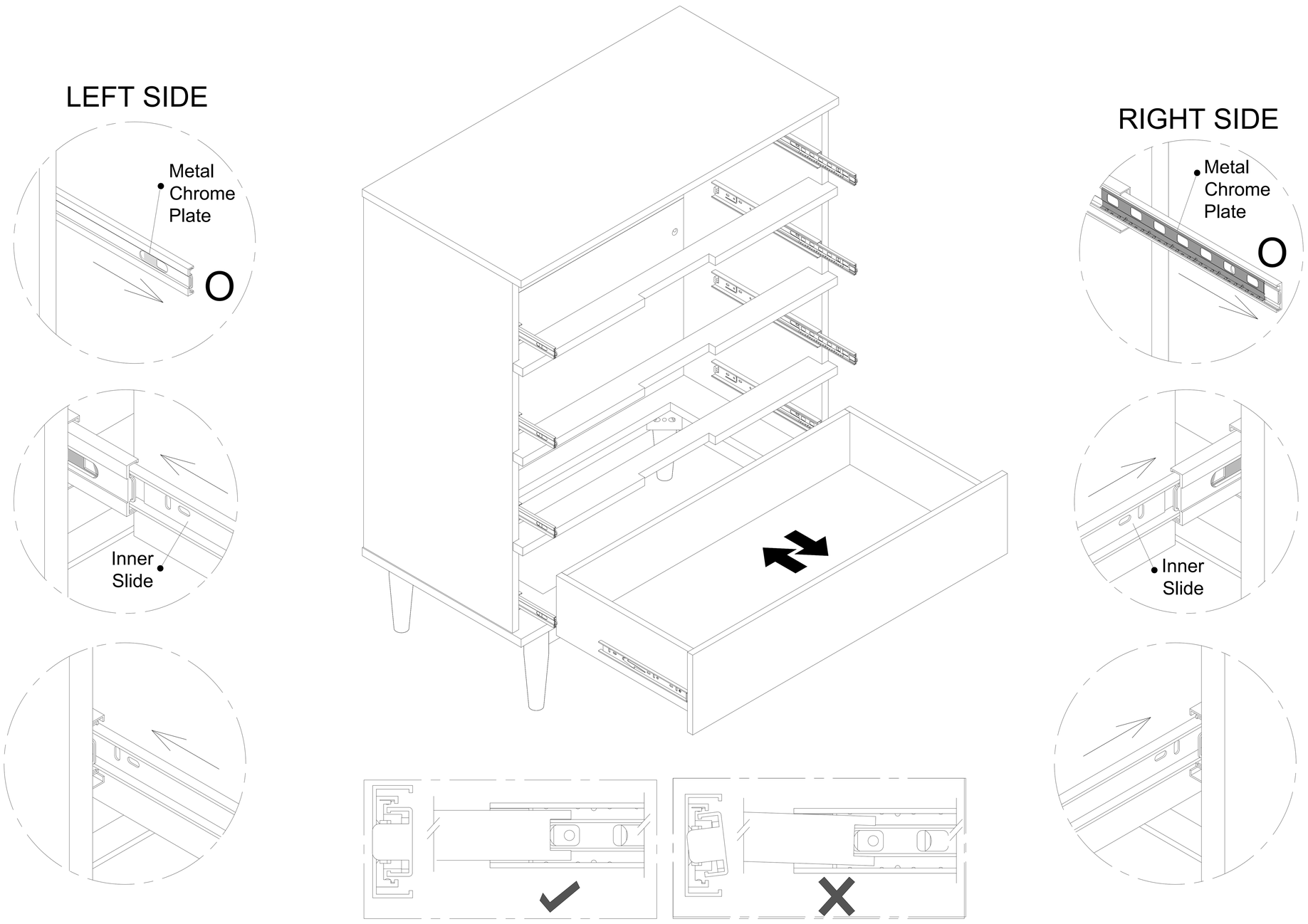

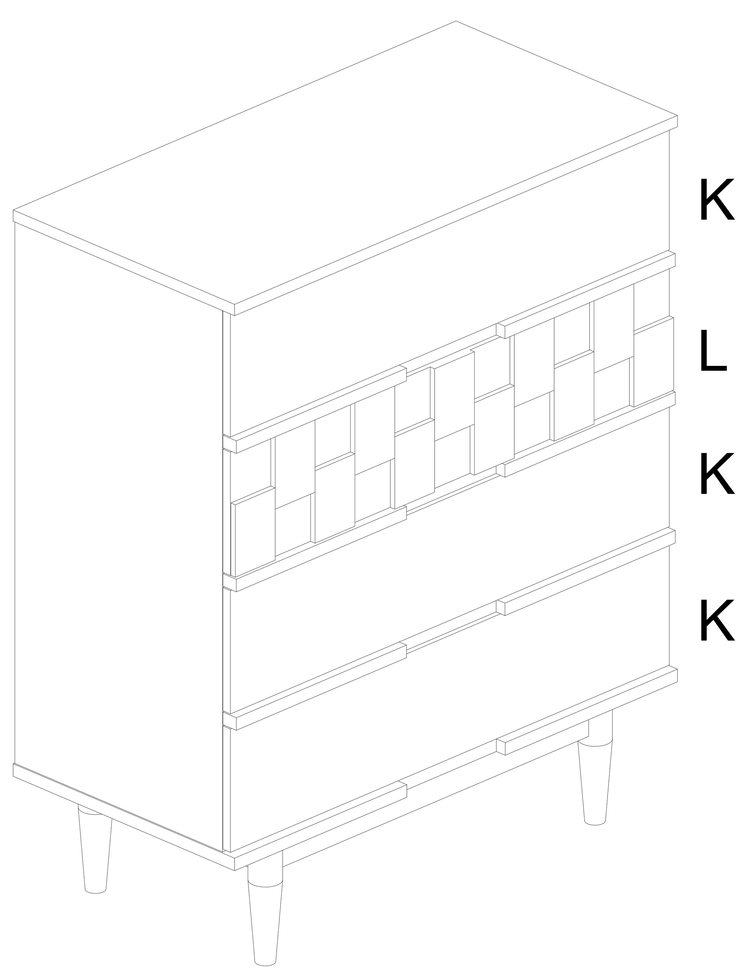

14 Attach the Anti-Tip Kit (AA) to the wall. Mount the bracket vertically to wall using the long screw. Then, secure the bracket vertically to the furniture back below the top using the short screw. Place the bracket as close to the center of the furniture back as possible, considering the wall stud and desired position in the room. Move furniture to its final position. Thread the bracket and pull it tight.

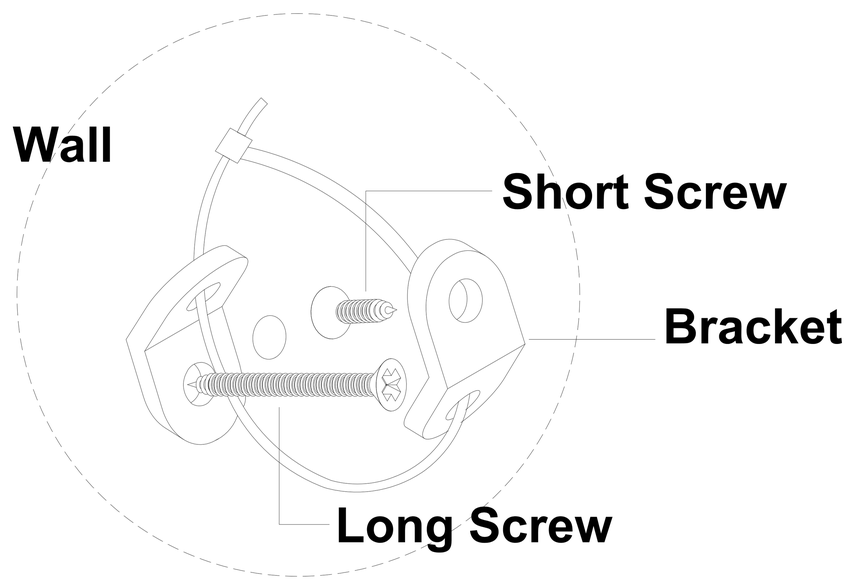

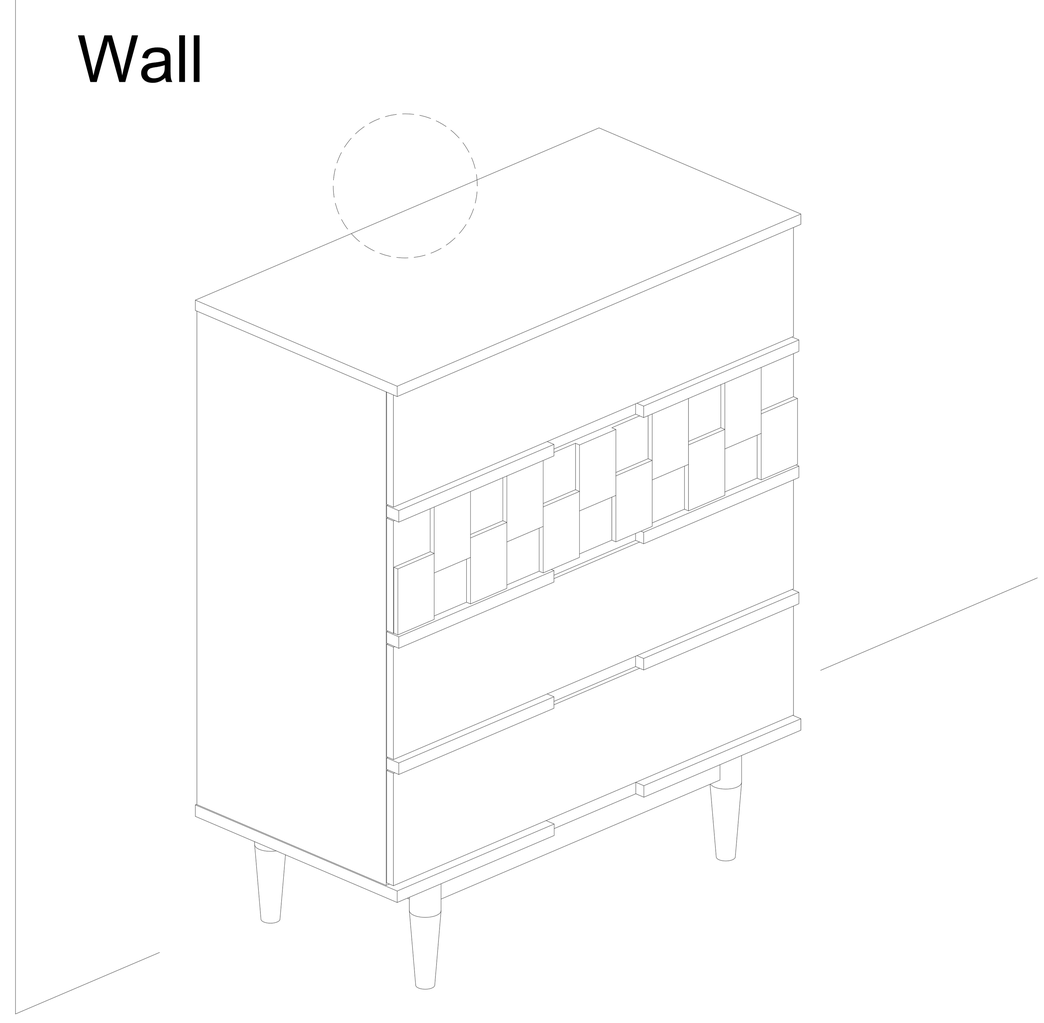

Cleaning & Care
Treat surfaces with care. Surfaces are resistant to scratches but are not scratch resistant. Clean surfaces with a dry or damp soft cloth. Do not use abrasive cleaners. Hardware may loosen over time. Periodically check that all connections are tight.