LANCASTER - 2 DOOR WITH OPEN SHELVES ASSEMBLY INSTRUCTIONS

Thank you for purchasing the **2 DOOR WITH OPEN SHELVES.**
Please read the instructions carefully to ensure safe operation of the product.

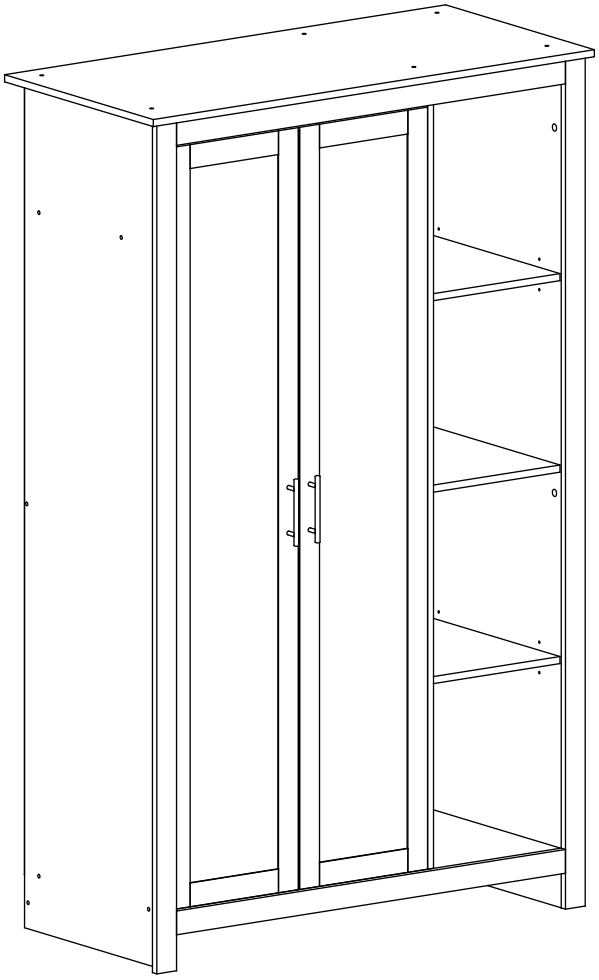

Size: (W)1118 x (D)520 x (H)1800mm

PLEASE READ this sheet prior to assembly to familiarise yourself with the various stages of construction.

Carefully open the pack supplied and check the contents against the parts and fittings check list. Do not destroy any of the packaging until you are certain that you have all the necessary parts for the assembly.

CAUTION: There are small components used in the construction of this unit. These loose items should be kept away from young children whilst assembling your unit to avoid the danger of choking hazards.

Tools Required

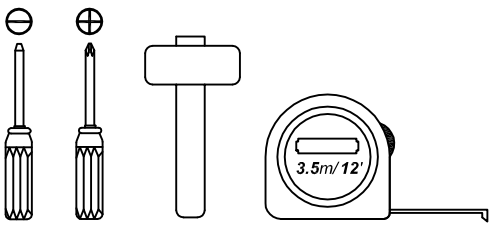

Person Required

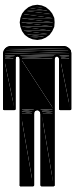

x 2

Approximate Assembly Time

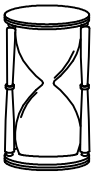

1 1/2 Hour

IMPORTANT - READ CAREFULLY - RETAIN THESE INSTRUCTIONS FOR FUTURE REFERENCE.

INFORMATION

- This product is intended for a maximum weight of **20kgs** and drawer/shelf load capacity **5kg** each. Do not exceed this weight.
- Due to the size of this product we recommend that is assembled in the room intended for use.
- When you ready to start, make sure that you have the right tools, plenty of space and a clean, dry area for assembly
- Unwrap all packaging materials and place the components on top of the carton box or not on a clean floor to prevent it from scratching.
- Check the pack and make sure you have all the parts listed.
- Ensure that this product is fully assembled as illustrated before use.
- Check all screws or bolts are tightened and inspect regularly.
- This product should only be used on firm, level ground.
- Keep small parts out of reach of children.
- Make sure the legs remain in contact with the ground.
- Tools not included.

WARNINGS

- DO NOT use power tools to construct this product.
- DO NOT tighten screw until fully assembled.
- DO NOT over tighten screw or bolts.
- DO NOT use this product if parts are missing, damage or worn.
- DO NOT stand or sit on this Wardrobe.
- We recommend the use of the wall safety bracket provided for safety reasons. N.B. Wall fixings suitable for a solid wall are included although the wall plug provided may not be suitable for other type of walls such as hollow walls. Fixings suitable for your wall type must be obtained separately..
  If in doubt please consult a qualified trade person. **Warning:** Always ensure the area to be drilled is free from hidden electrical wires, water and gas pipes.

CARE INFORMATION

- Never use scourers, abrasives or chemical cleaners.
- To clean wipe with a sponge and soapy water. Do not use solvent based cleaners or detergents as they can bleach or damage the product.

Please check the pack contents before assembling the product. If any components are missing, please contact your retailer. The fittings pack contains small items that should be kept away from small children.

Parts

CODE	PART NAME	QTY
A	Side Panel (L) (15 x 495 x 1785mm)	1
B	Side Panel (R) (15 x 495 x 1785mm)	1
C	Top Panel (15 x 520 x 1118mm)	1
D	Bottom Panel (15 x 495 x 987mm)	1
E	Partition Panel (15 x 495 x 1660mm)	1
F	Fixed Shelf Panel (15 x 395 x 650mm)	1
G	Back Support Panel (15 x 80 x 650mm)	1
H	Fixed Shelf Panel (15 x 322 x 490mm)	1
I	Adjustable Shelf Panel (15 x 322 x 490mm)	2
J	Front Leg Panel (L) (15 x 50 x 1785mm)	1
K	Front Leg Panel (R) (15 x 50 x 1785mm)	1

CODE	PART NAME	QTY
L	Front Top Support (15 x 50 x 986mm)	1
M	Bottom Front Support Panel (15 x 50 x 986mm)	1
N	Bottom Support Panel (15 x 110 x 987mm)	1
O	Top Support Panel (L) (15 x 65 x 650mm)	1
P	Top Support Panel (R) (15 x 65 x 322mm)	1
Q	Door Panel (L) (15 x 324 x 1602mm)	1
R	Door Panel (R) (15 x 324 x 1602mm)	1
Y	Backply Panel (2.5 x 338 x 1687mm)	2
Y1	Backply Panel (2.5 x 338 x 1687mm)	1

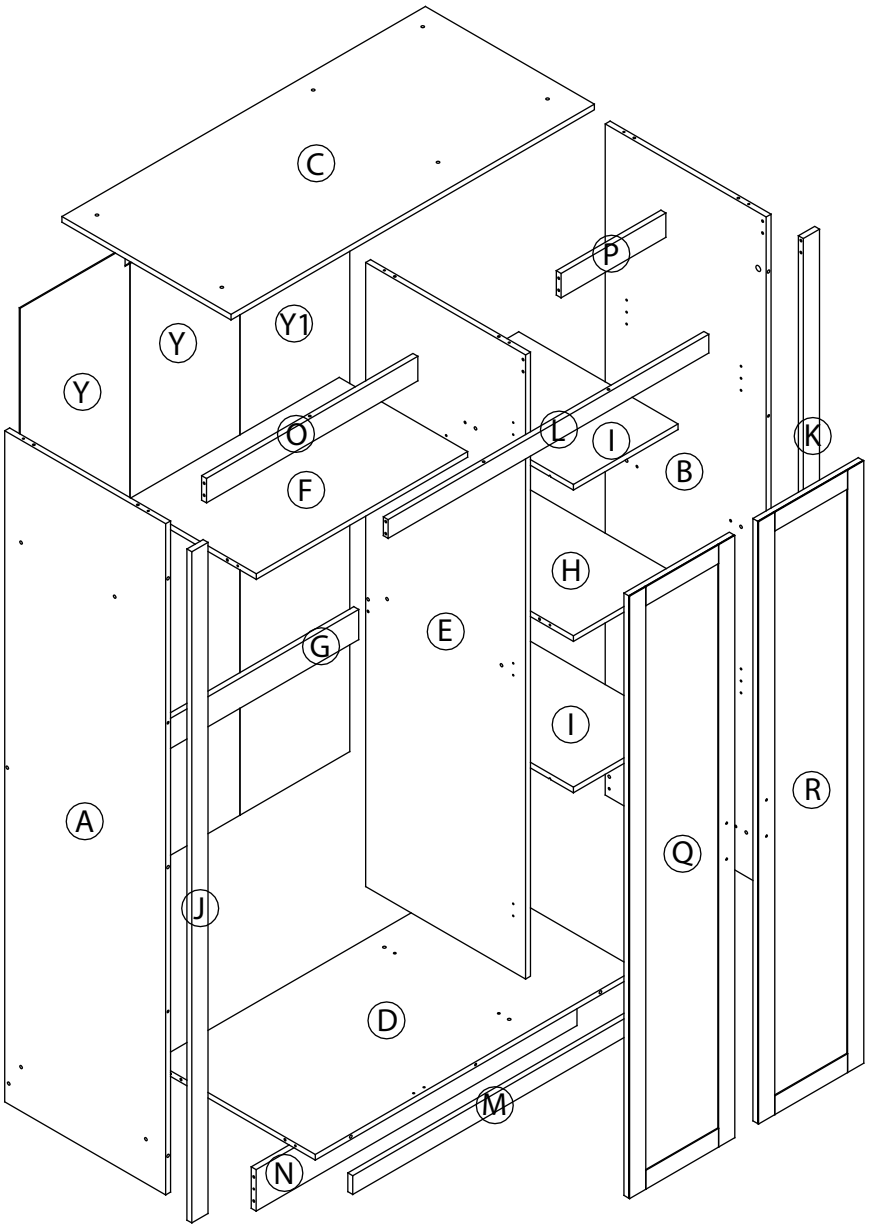

Fixings (to scale)

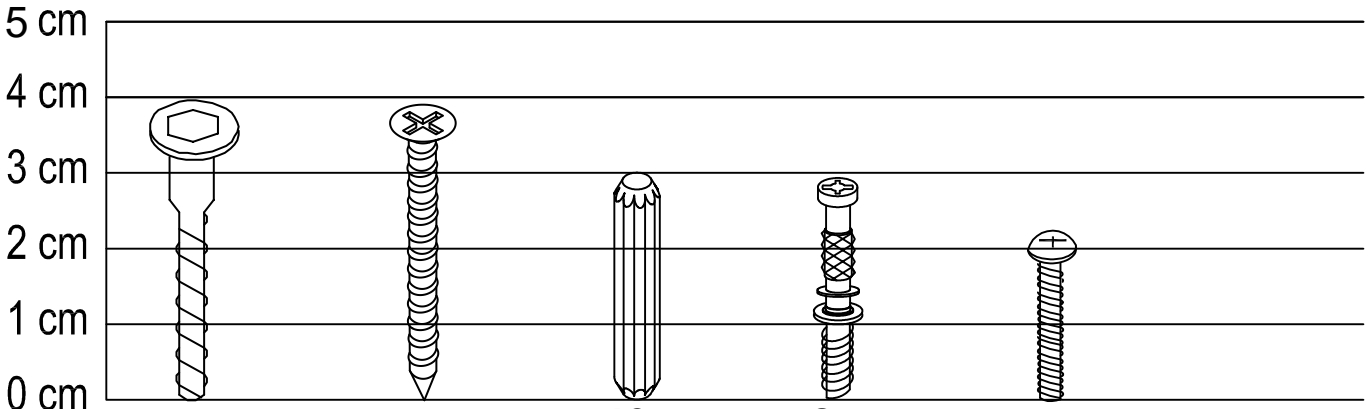

24x D6.3 x 40mm **a** Unitar Screw

1x M4 x 38mm **b** CSK Screw

46x D6 x 30mm **c** Wooden Dowel

8x M5 x 29mm **d** Minifix Bolt

4x M4 x 22mm **e** Handle Screw

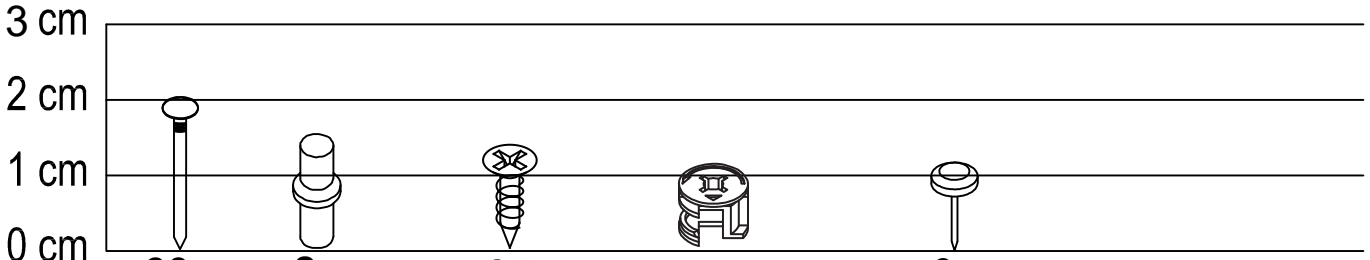

60x **f** Nail Pin

8x D5 mm **g** Shelf Support

35x M3.5 x 15mm **h** Csk Screw

8x D12 x 15mm **i** Minifix Cam

6x 5 x 8 x 13.5mm **j** Nail Leg

Fixings (not to scale)

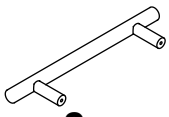

2x (96hole mm) **k** Bar Handle

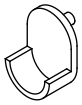

2x **l** Plastic U-Bracket

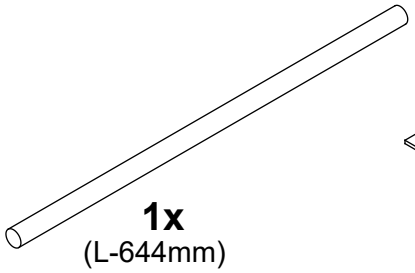

1x (L-644mm) **m** Metal Hanger

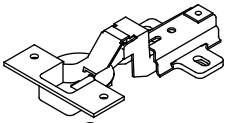

3x (7/8) **n** Hinges

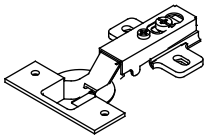

3x (1/4) **o** Hinges



15x (D-19mm) **p** Round Sticker

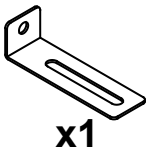

x1 **q** L-Mounting Bracket

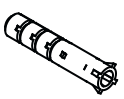

x1 **r** Wall Plug

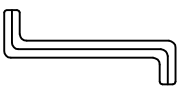

1x M4 **s** Allen Key

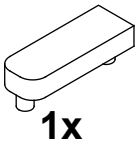

1x **t** Door Stopper

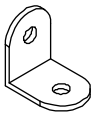

3x (20mm) **p** L-Bracket

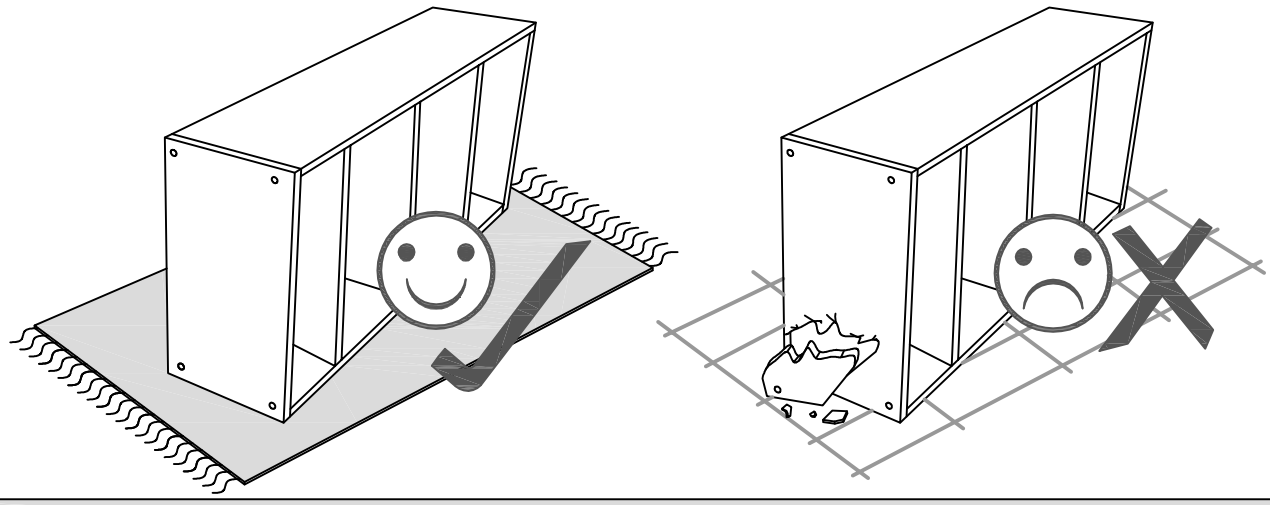

Layout Parts on Soft Surface

STEP 1

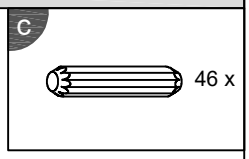

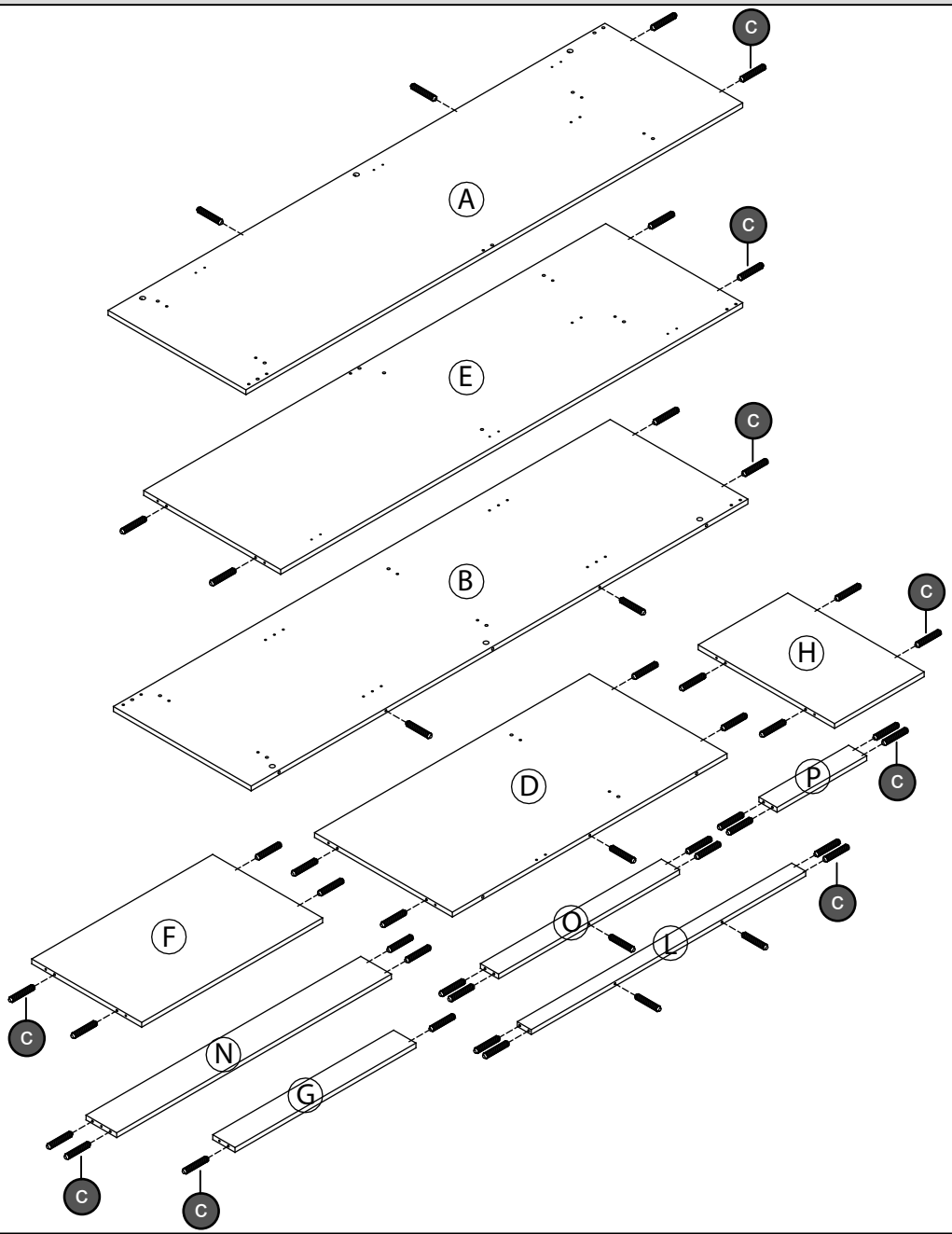

Parts Required	Qty
Panel (A)	1
Panel (B)	1
Panel (D)	1
Panel (E)	1
Panel (F)	1
Panel (G)	1
Panel (H)	1
Panel (L)	1
Panel (N)	1
Panel (O)	1
Panel (P)	1

STEP 2

d

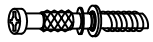

8 x

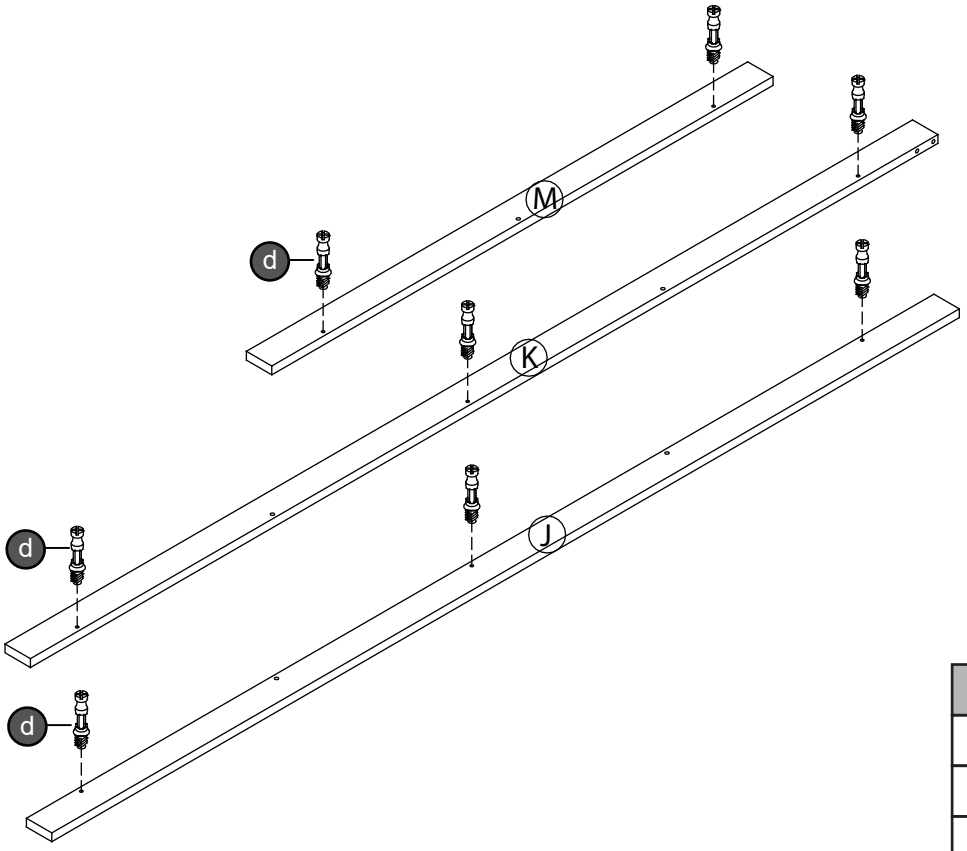

Don't screw too deep

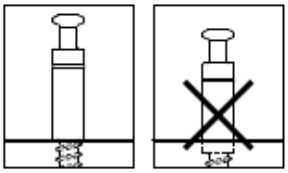

Parts Required	Qty
Panel (J)	1
Panel (K)	1
Panel (M)	1

STEP 3

I



2 x

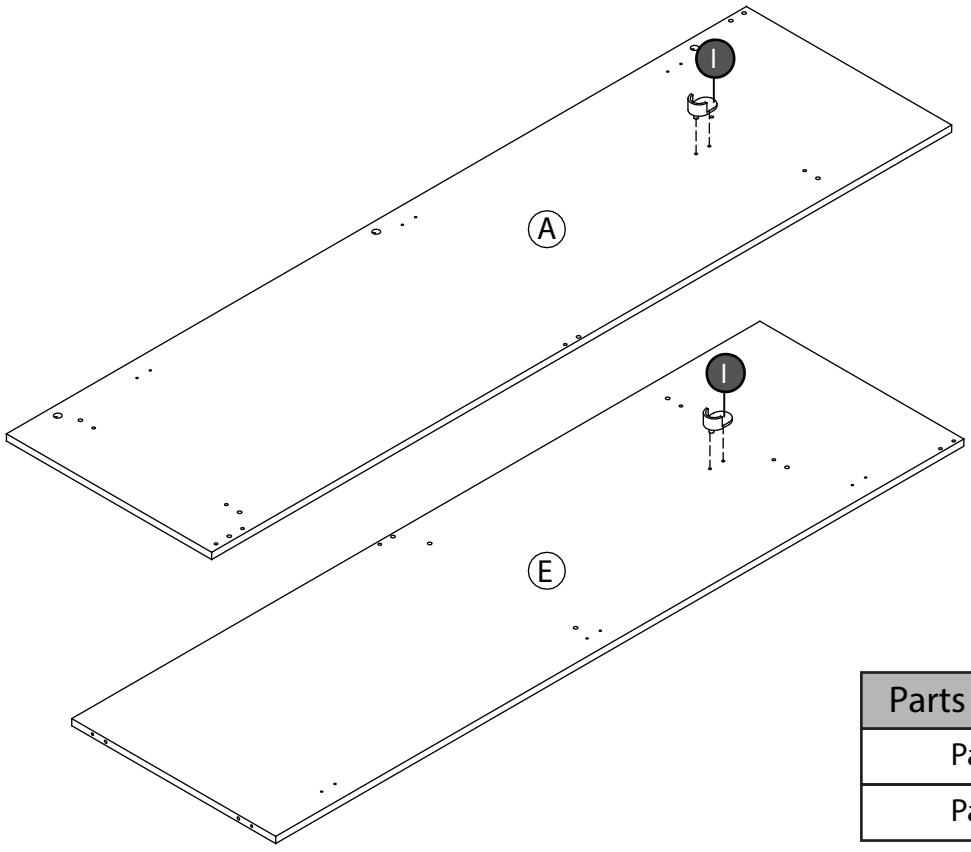

Parts Required	Qty
Panel (A)	1
Panel (E)	1

STEP 4

h 12 x

o 3 x

n 3 x

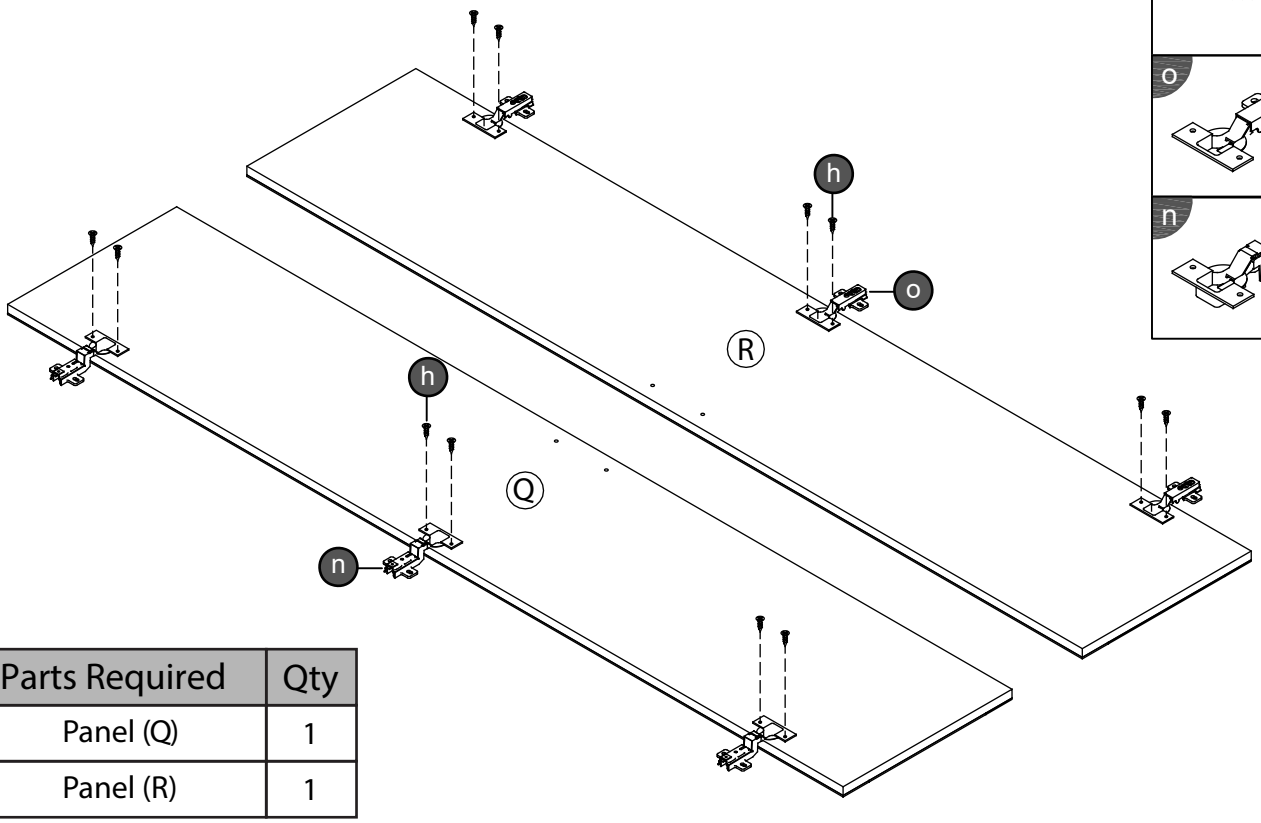

Parts Required	Qty
Panel (Q)	1
Panel (R)	1

STEP 5

h 1 x

q 1 x

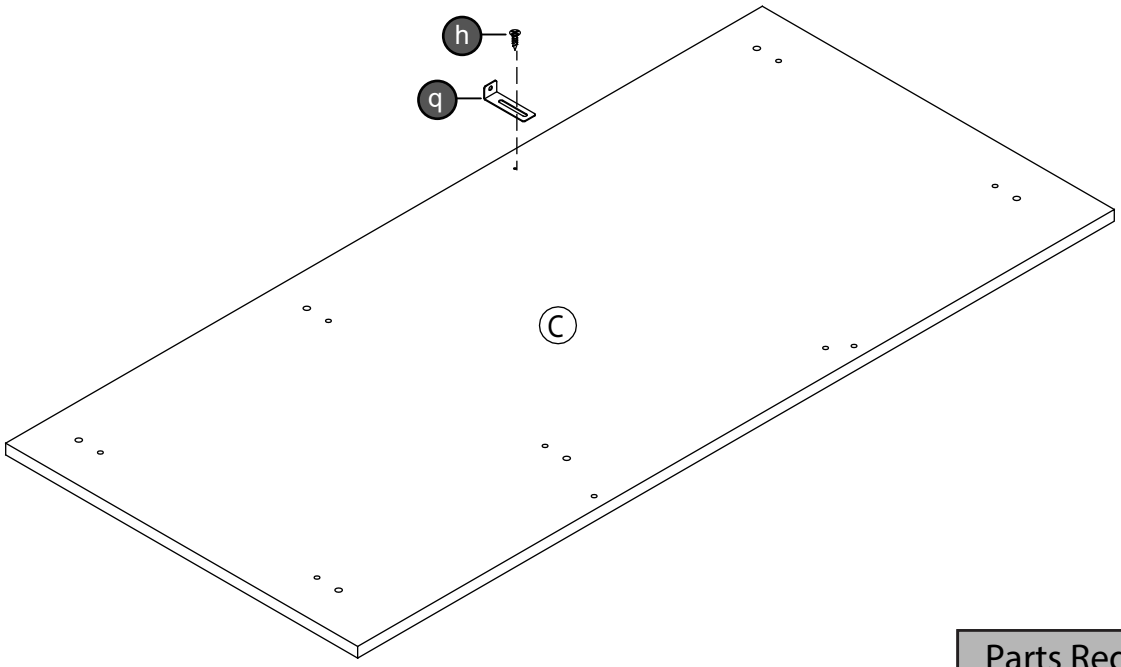

Parts Required	Qty
Panel (C)	1

STEP 6

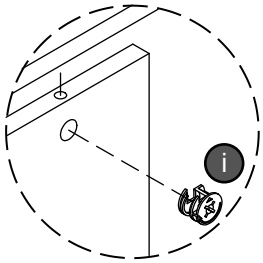

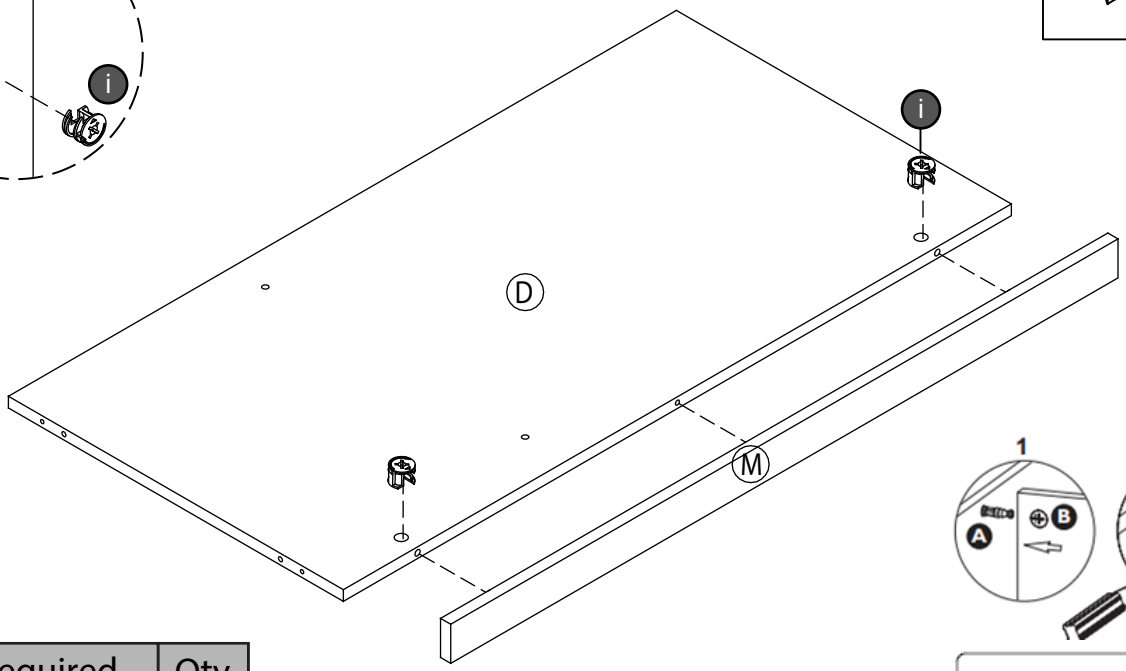

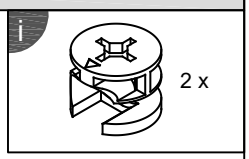

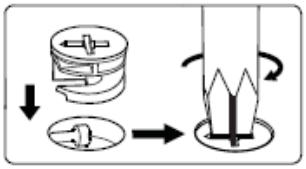

Parts Required	Qty
Panel (D)	1
Panel (M)	1

STEP 7

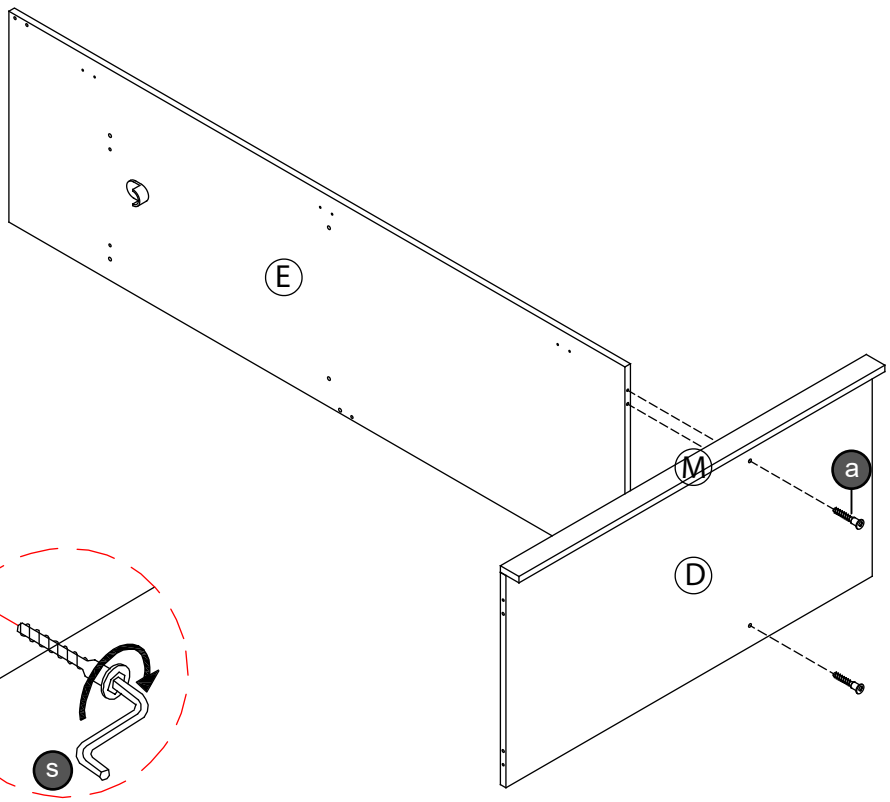

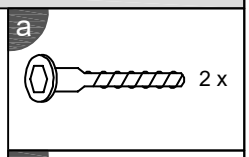

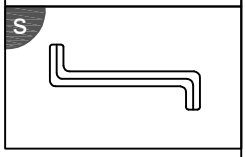

Parts Required	Qty
Panel (D)	1
Panel (E)	1
Panel (M)	1

STEP 8

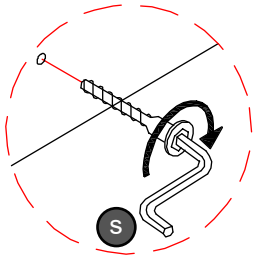

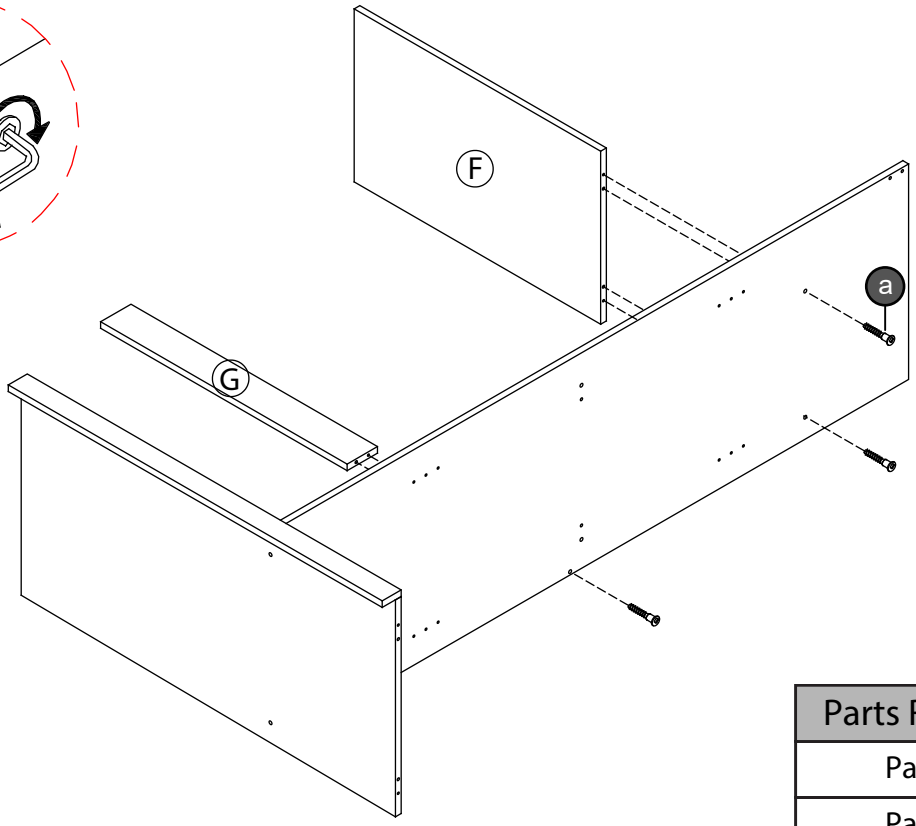

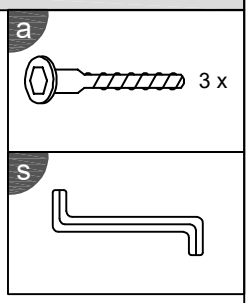

Parts Required	Qty
Panel (F)	1
Panel (G)	1

STEP 9

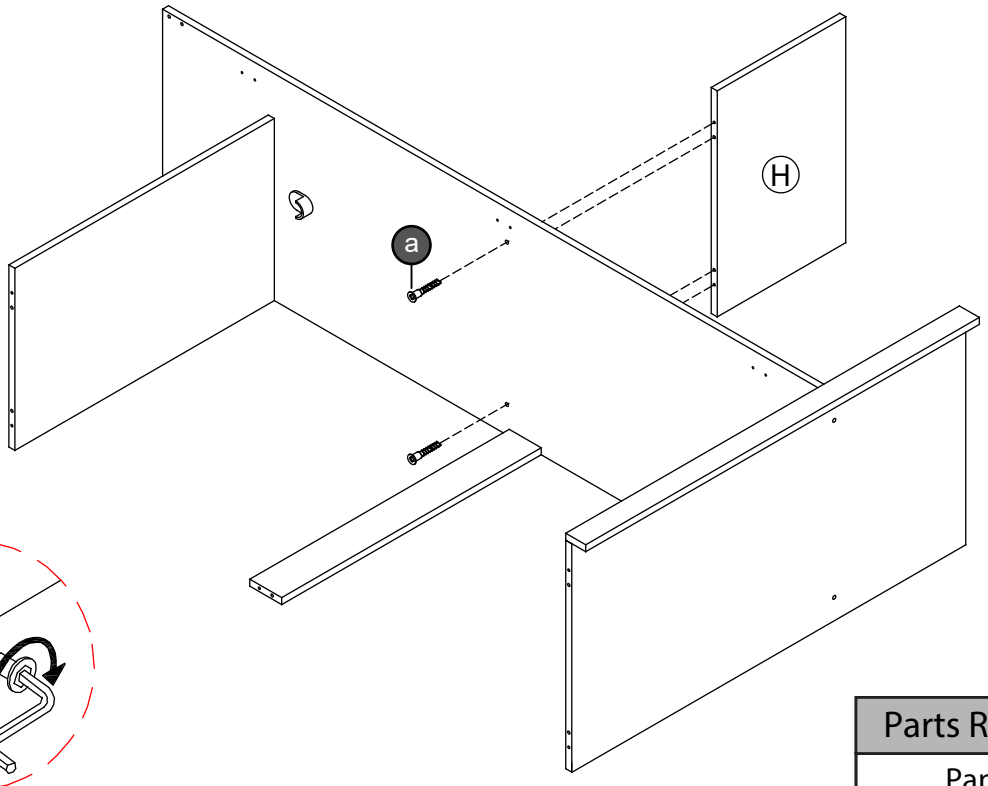

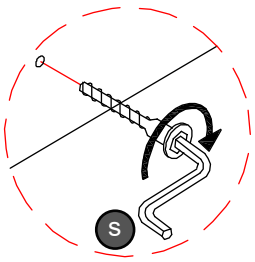

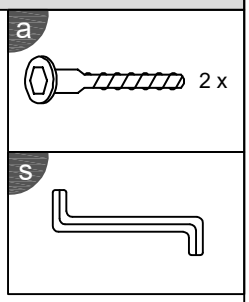

Parts Required	Qty
Panel (H)	1

STEP 10

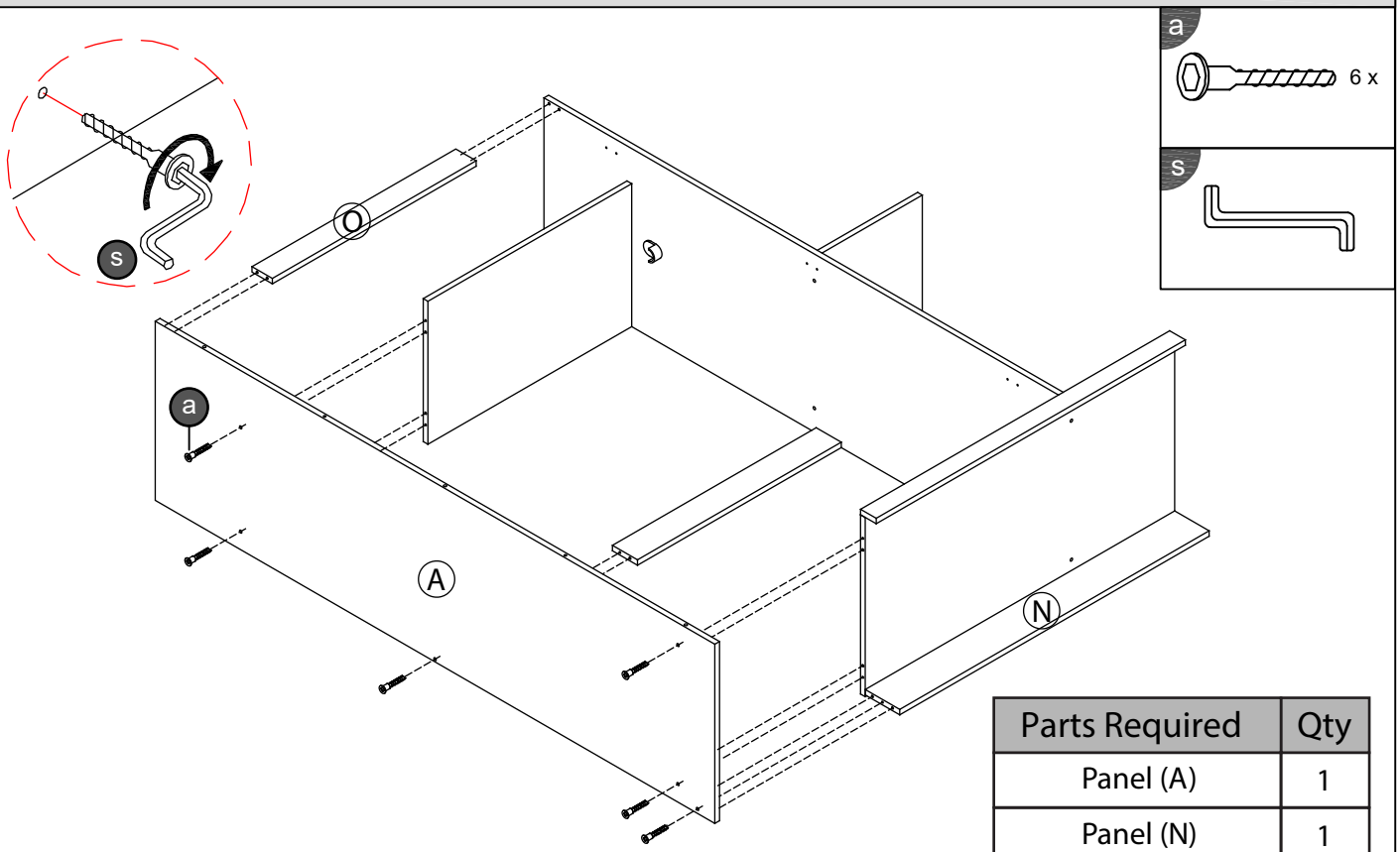

Parts Required	Qty
Panel (A)	1
Panel (N)	1
Panel (O)	1

STEP 11

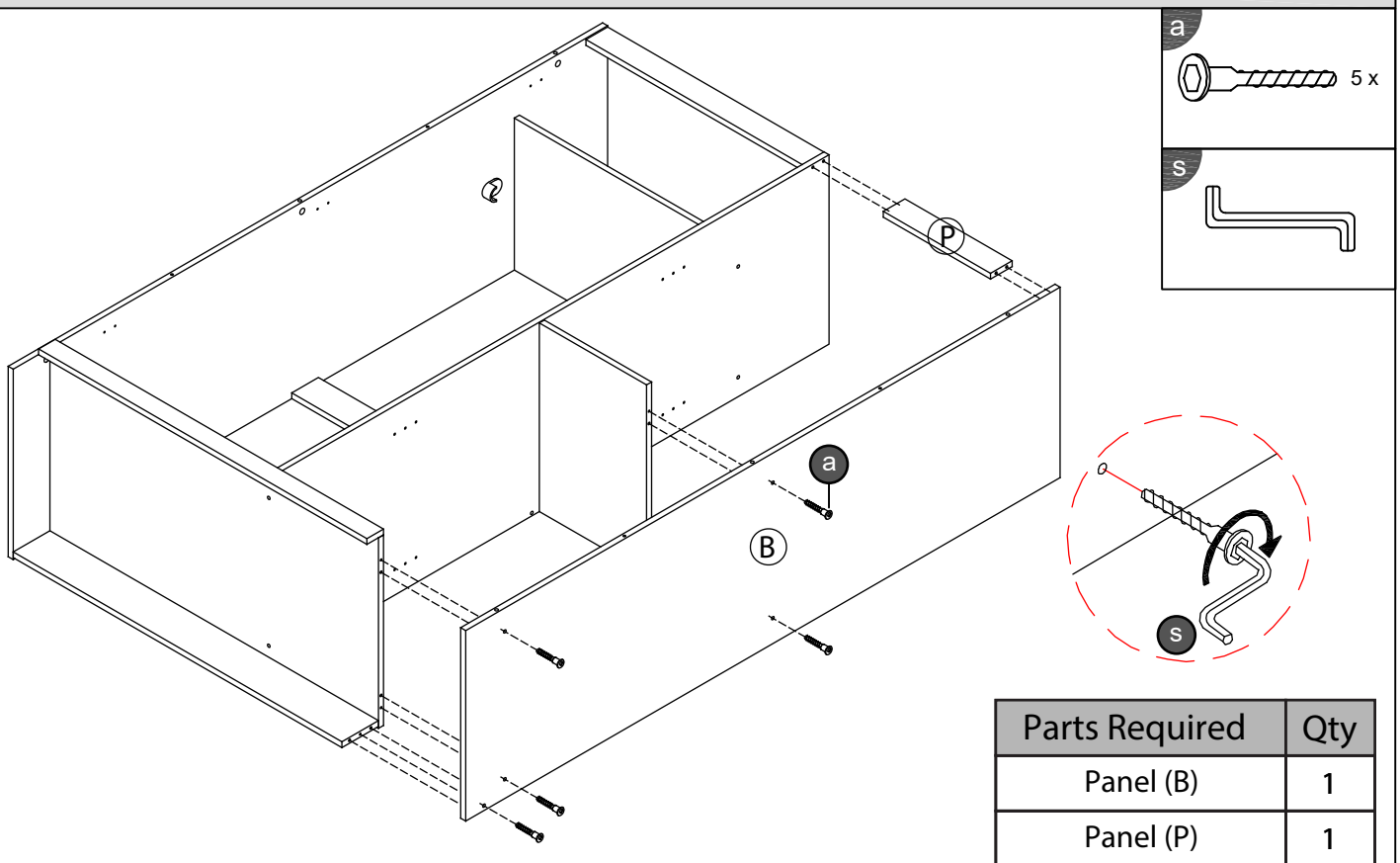

Parts Required	Qty
Panel (B)	1
Panel (P)	1

STEP 12

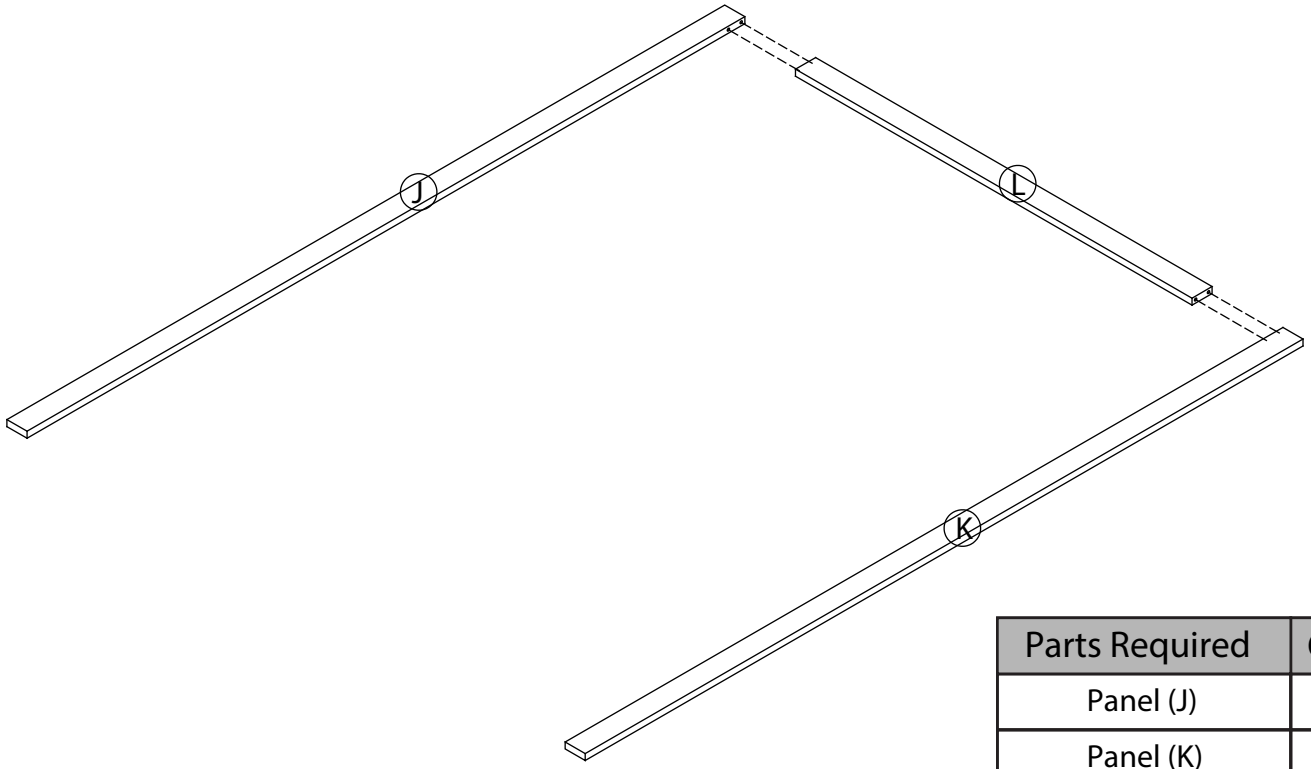

Parts Required	Qty
Panel (J)	1
Panel (K)	1
Panel (L)	1

STEP 13

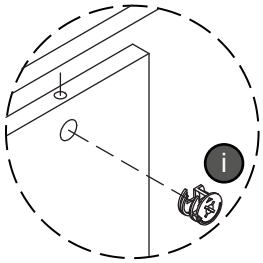

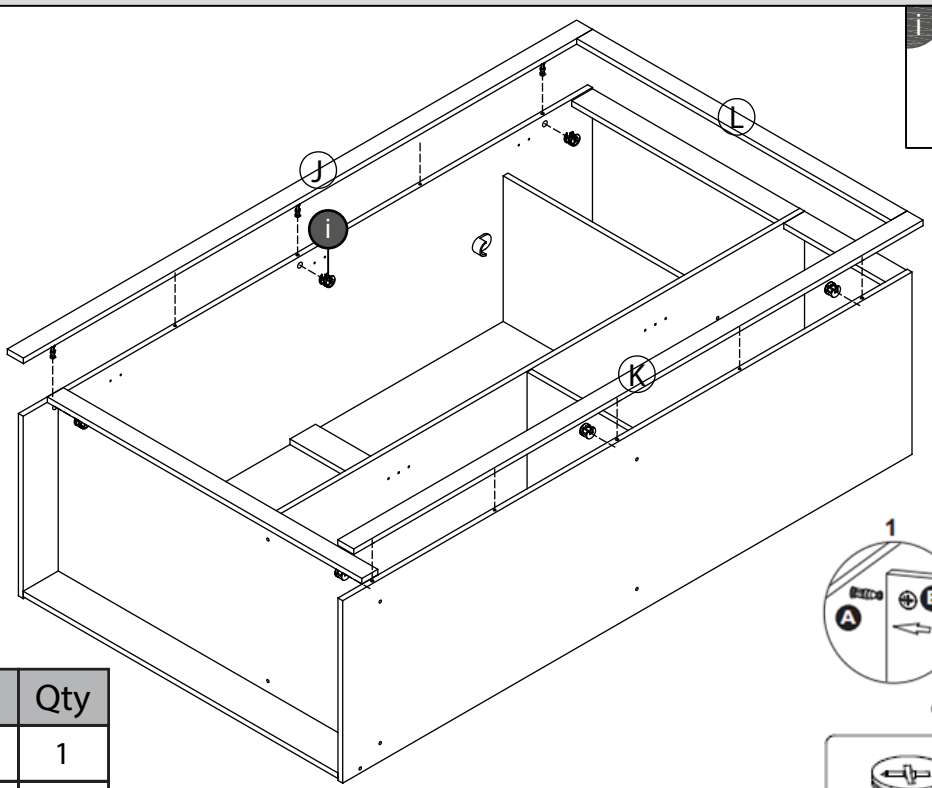

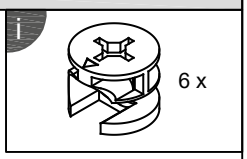

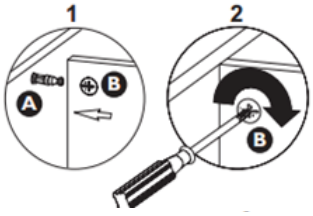

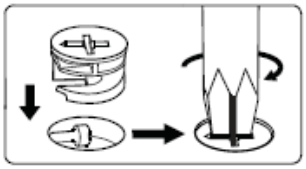

Parts Required	Qty
Panel (J)	1
Panel (K)	1
Panel (L)	1

STEP 14

j



6 x

STEP 15

Fix bracket P with screws H into both adjoining panel faces, as shown.

h

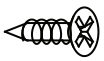

6 x

p

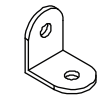

3 x

STEP 16

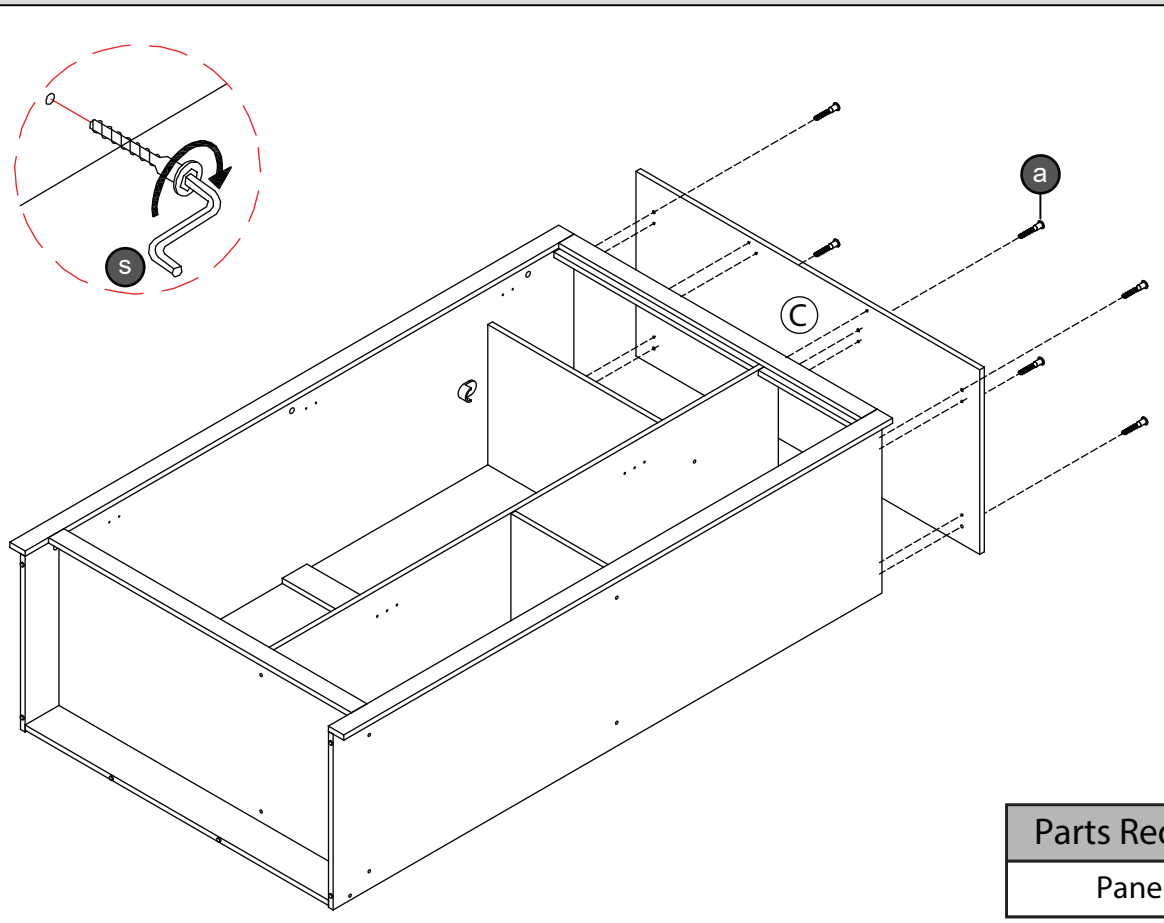

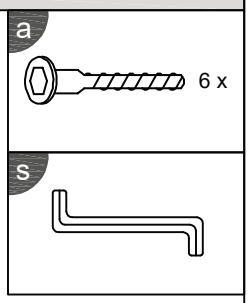

Parts Required	Qty
Panel (C)	1

STEP 17

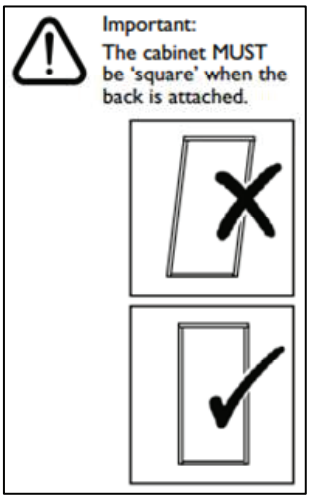

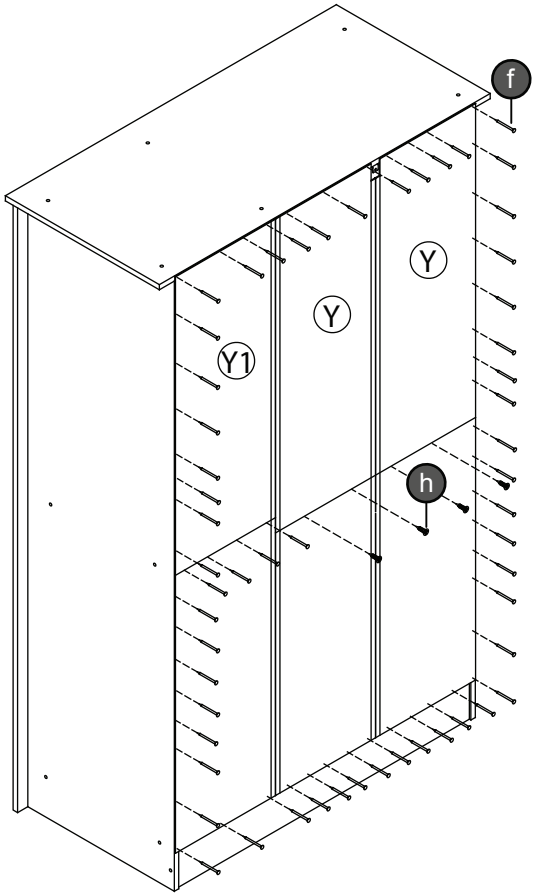

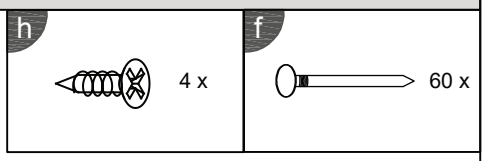

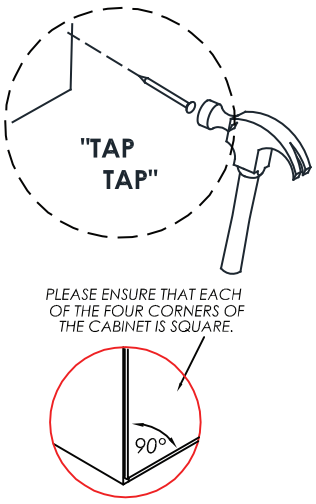

Parts Required	Qty
Panel (Y)	2
Panel (Y1)	1

STEP 18

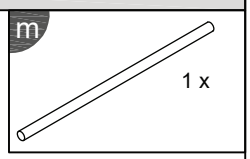

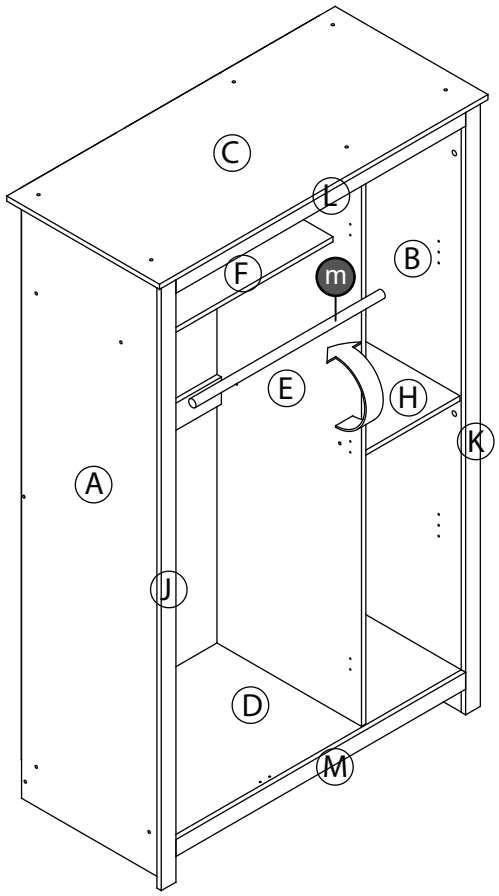

STEP 19

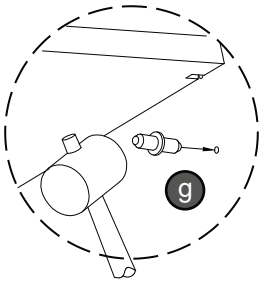

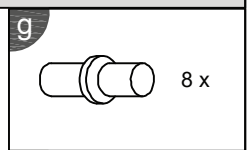

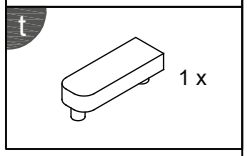

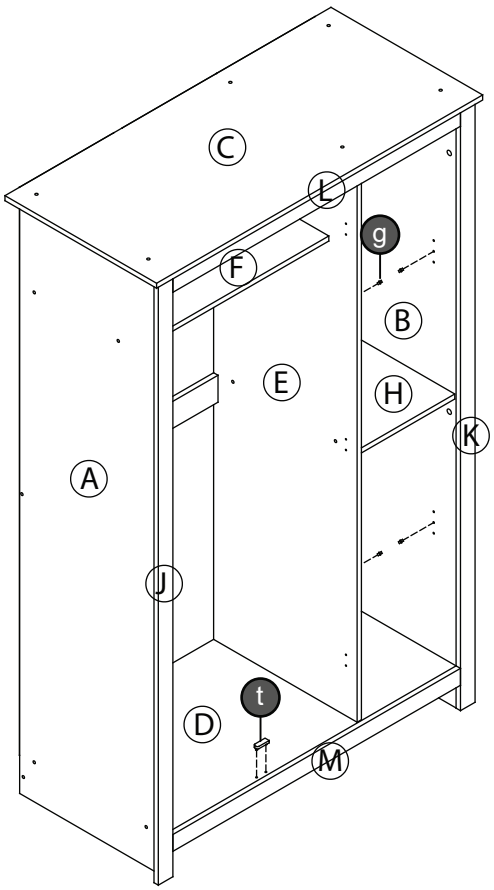

STEP 20

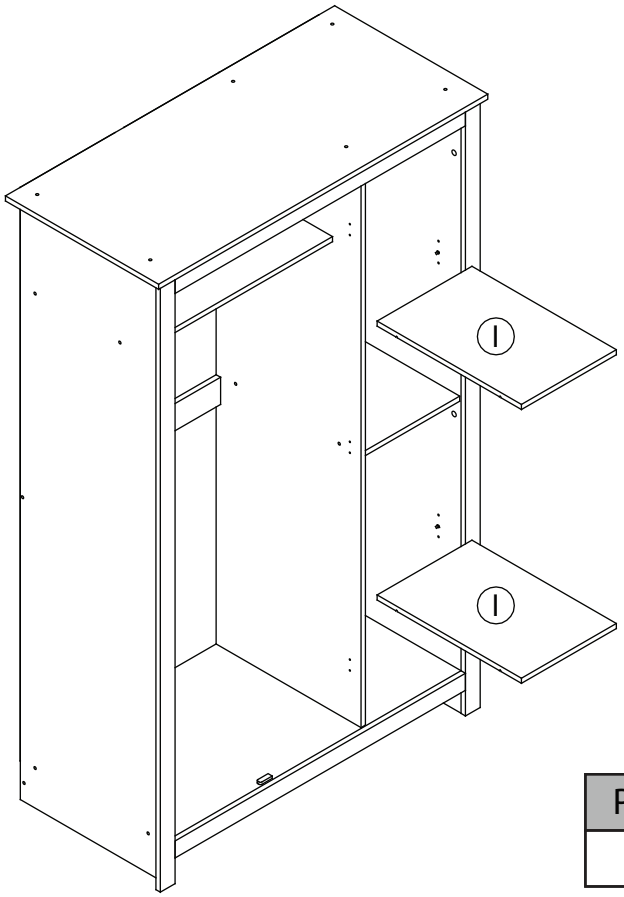

Parts Required	Qty
Panel (I)	2

STEP 21

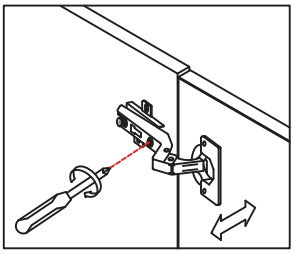

A. Lateral adjustment

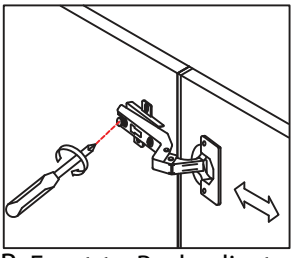

B. Front-to-Back adjustment

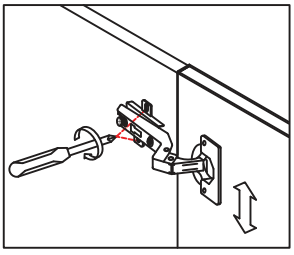

C. Vertical Adjustment

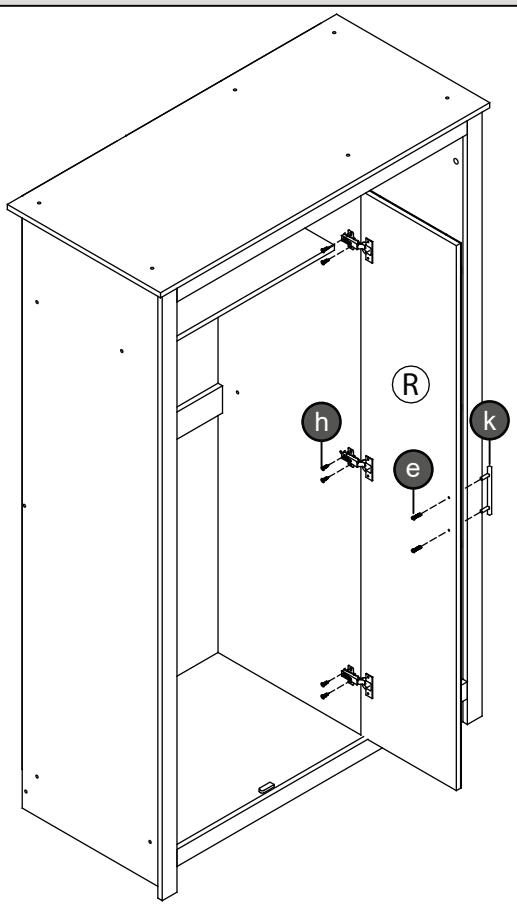

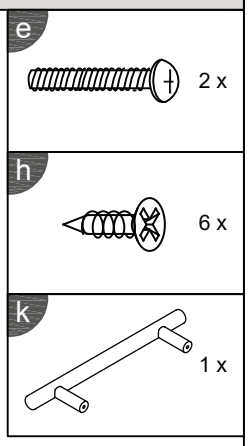

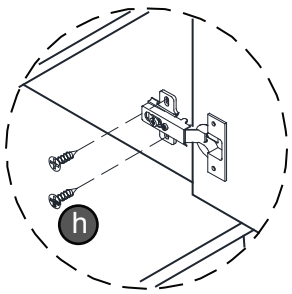

Parts Required	Qty
Panel (R)	1

STEP 22

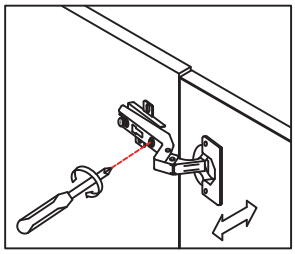

A. Lateral adjustment

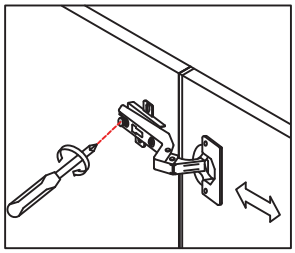

B. Front-to-Back adjustment

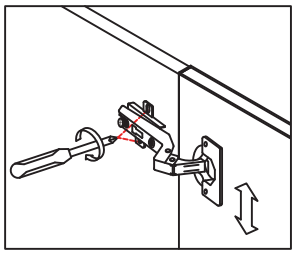

C. Vertical Adjustment

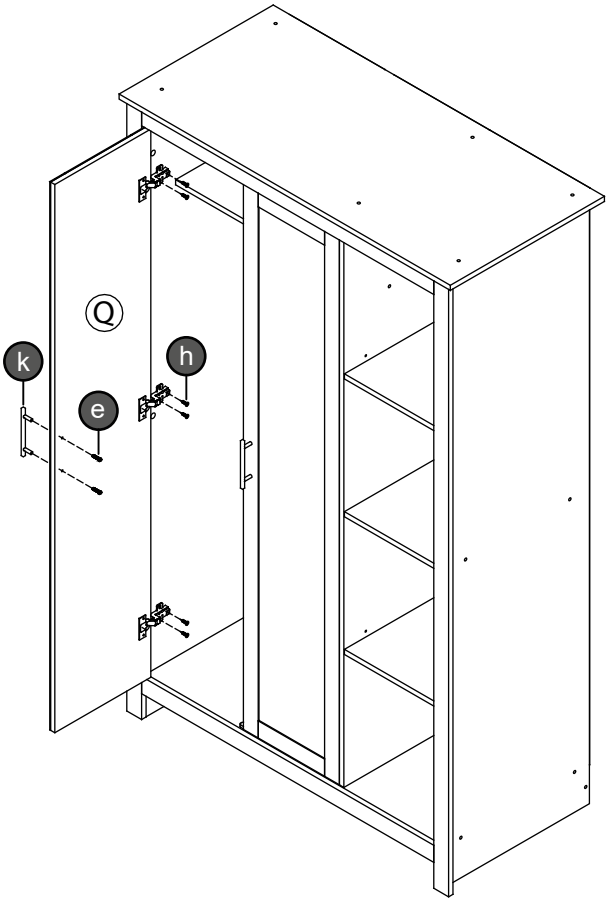

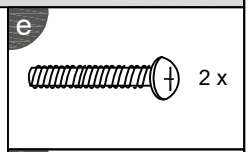

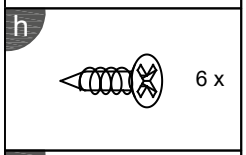

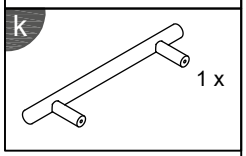

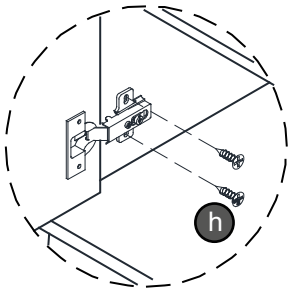

Parts Required	Qty
Panel (Q)	1

STEP 23

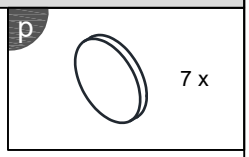

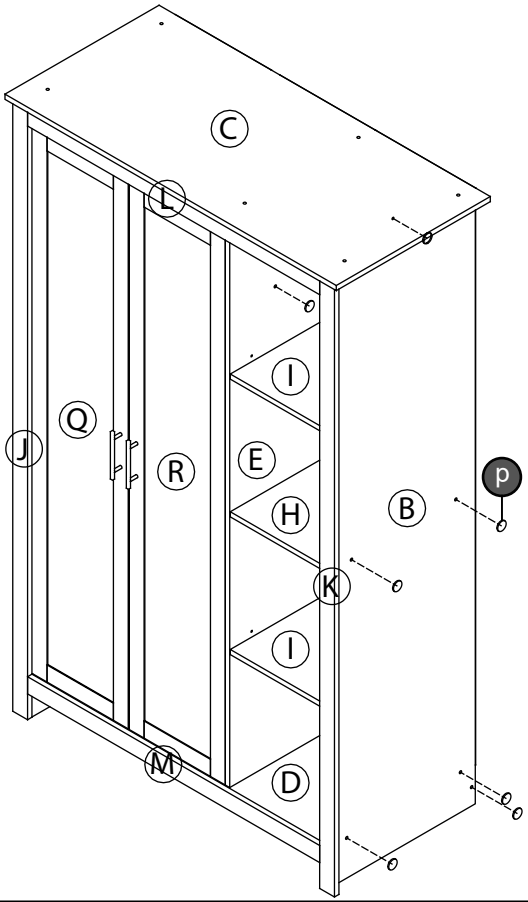

STEP 24

p

8 x

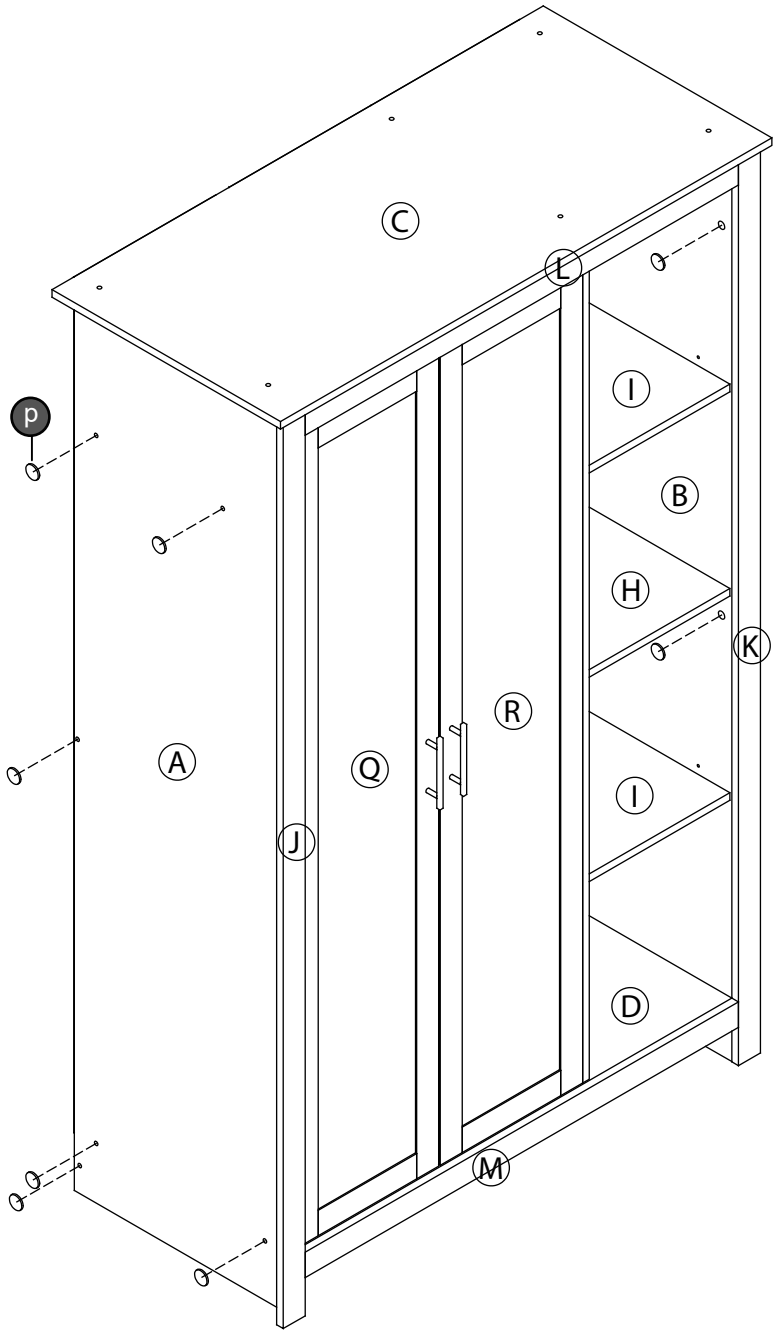

FITTING OF L MOUNTING BRACKET

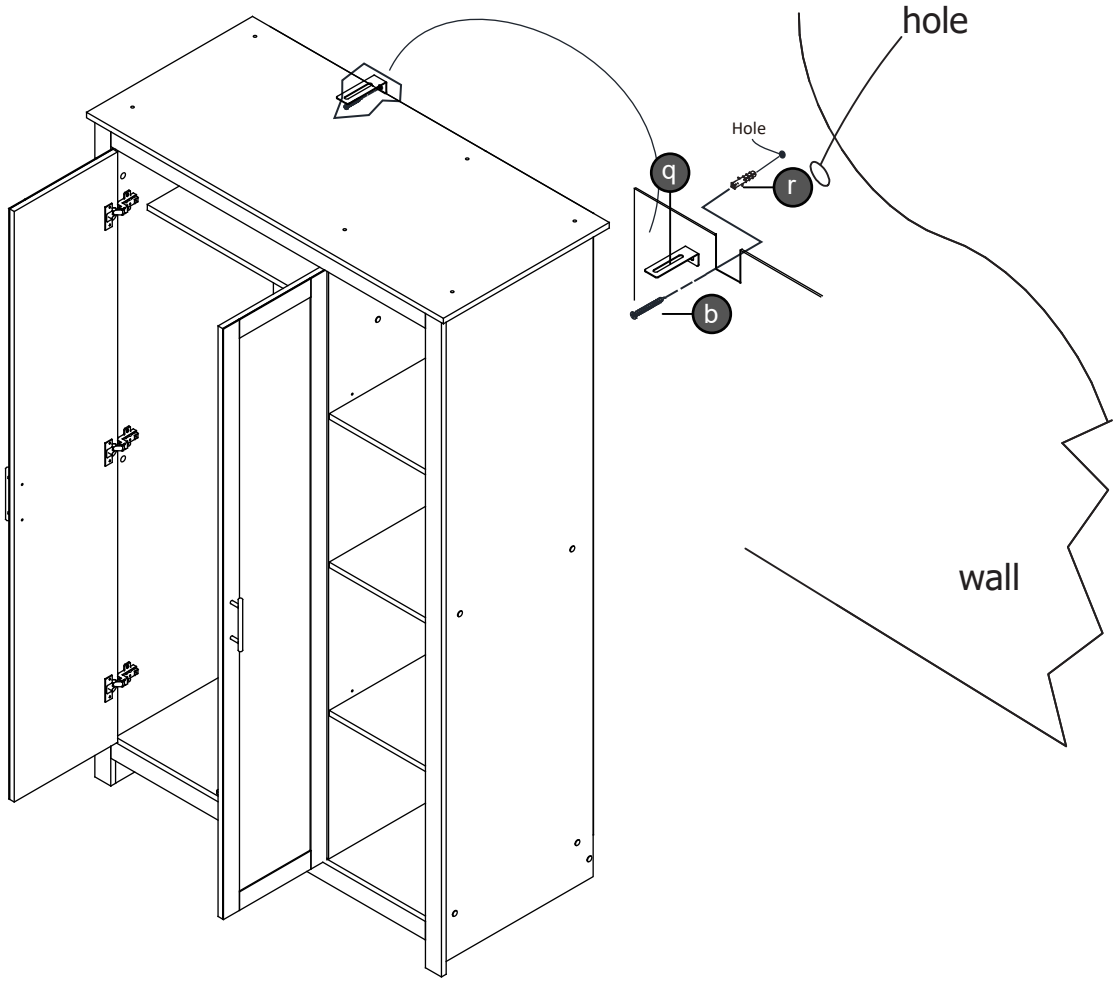

NOTE : The wall fixing plug supplied with this product is suitable for solid and brick walls .

For hollow and stud type walls fixing devices suitable for those type of walls must be obtained separately.

Please ensure the fixing is safe and secure before use and that the area to be drilled is free from hidden wires ,water & gas pipes.

HARDWARE LIST

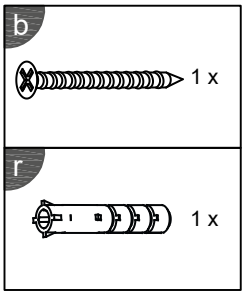

Complete Assembly

Your **LANCASTER 2 DOOR WITH OPEN SHELVES** is now completely assembled

Periodically check to ensure that the components are in their proper position, free from damage. Also, make sure the connectors are tight and secure.

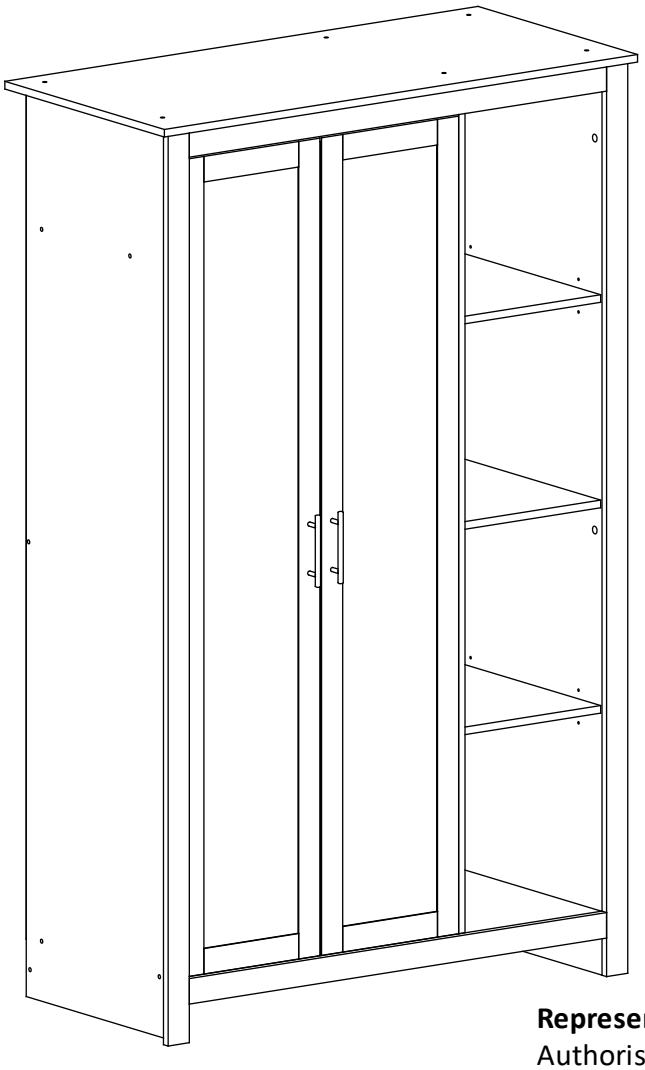

Represented by:
Authorised Rep Compliance Ltd
71 Lower Baggot Street
Dublin
D02 P593
Ireland
www.arccompliance.com

Keep instructions for future reference

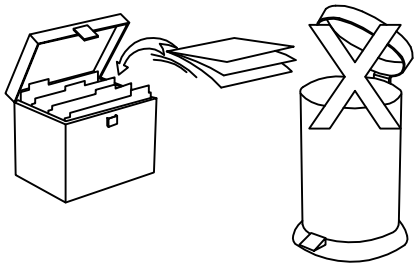

Supplied By
GFW The Furniture Warehouse
Waterside Distribution Centre
Waterside Business Park
Johnson Road
Lancashire
BB3 3RT
www.gfwlimited.co.uk