MANUFACTURED BY:
Backyard Discovery
3305 Airport Drive, Pittsburg, KS 66762
800-856-4445

Basepoint Business Centre: Rivermead Drive,Westlea, Swindon SN5 7EX Phone: 0800-118-2476
J.P. Coenstraat 7, The Bridge, The Hague, 2595 WP, Netherlands Phone: 0800-567-8990

Tanglewood

Swing Set
Model # 55010B

The assembly manual must be retained
since it contains important information

WARNING
Adult Assembly Required.
Not suitable for children under 36 months due to small parts.
FOR DOMESTIC USE ONLY. INTENDED FOR OUTDOOR USE.

Please visit www.backyarddiscovery.com

For the most up to date assembly manual, to register your set, or to order replacement parts
Para obtener instrucciones en español, visite www.backyarddiscovery.com

BILT®
EASY STEP-BY-STEP
3D INTERACTIVE INSTRUCTIONS
DOWNLOAD THE FREE APP
Download on the App Store
Get it on Google play

GOCONFIGURE
Putting it all together for you
INSTALLATION SERVICES AVAILABLE!*
See inside for details

Made in China
INS-55010B-TANGLEWOOD-ENG 1-7-22

Owner's Manual - Basic Setup Dimensions & Assembly Notes

Place the set on level ground, not less than 6'-7" [2 m] from any structure or obstruction such as a fence, garage, house, overhanging branches, laundry lines, or electrical wires.

- While assembling unit, take time before and after each phase to make sure fort is level. If fort is not level, assembly will be difficult and improper assembly may result. Extra care must be taken to insure the fort is square.
- The safe play area refers to a zone extending 6'-7" (2 m) beyond the play product on all sides, including the space above the play product.

SAFE PLAY AREA DIAGRAM

Ground Dimensions

11'-10" [3.6 m] x 14'-7" [4.4 m]

Safe Play Area

27'-8 1/2" [8.4 m] x 24'-11 1/2" [7.6 m] x 15'-4 3/4" [4.7 m]

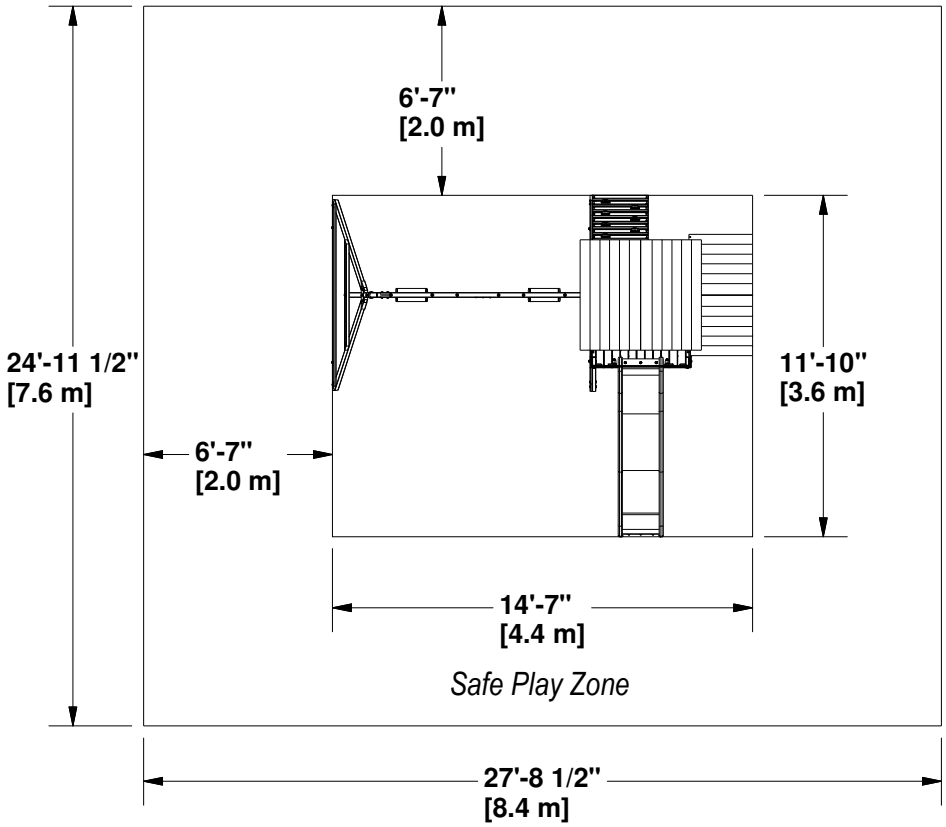

SAFE PLAY HEIGHT: 15'-4 3/4" [4.7 m]
MAXIMUM FALL HEIGHT: 6'-4 1/2" [1.9 m]

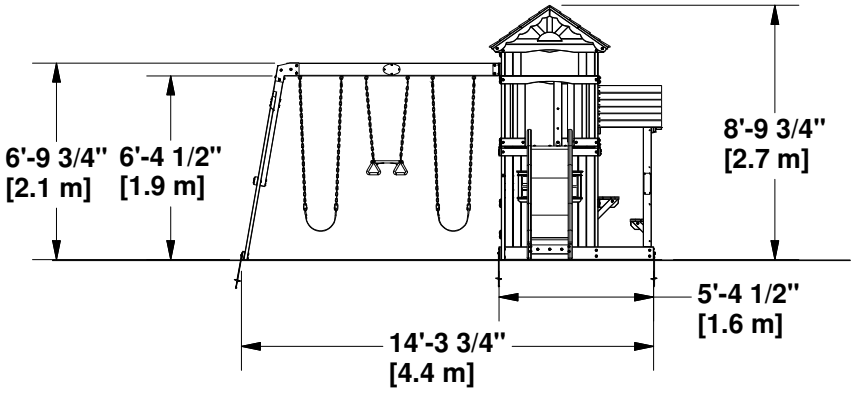

General Information:

Your set has been designed and engineered for children only and for residential use only.
A maximum of 150 lbs. per child is recommended for play activities designed for individual use.
A maximum of 120 lbs. per child is recommended for play activities designed for multiple child use.
A maximum of 9 children is recommended for this swing set.

Owner's Manual - Parts Identification

Wood Components (Not to Scale)

E1 (x2) | **PORCH UPRIGHT - W4L16356**
1 3/8"x3 3/8"x33 3/8" (36x86x848)

E2 (x1) | **PICNIC UPRIGHT - W4L16842**
1 3/8"x3 3/8"x56 1/8" (36x86x1426)

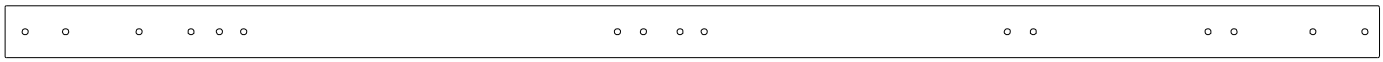

E3 (x1) | **FORT UPRIGHT - W4L16344**
1 3/8"x3 3/8"x89 1/2" (36x86x2274)

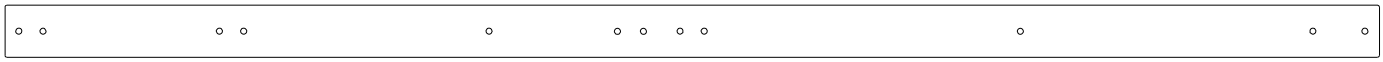

E4 (x1) | **FORT UPRIGHT - W4L16345**
1 3/8"x3 3/8"x89 1/2" (36x86x2274)

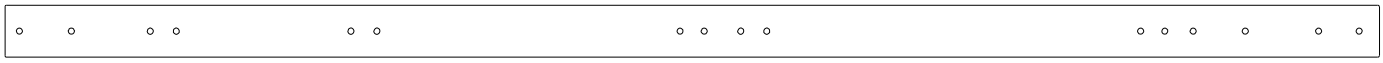

E5 (x1) | **FORT UPRIGHT - W4L16346**
1 3/8"x3 3/8"x89 1/2" (36x86x2274)

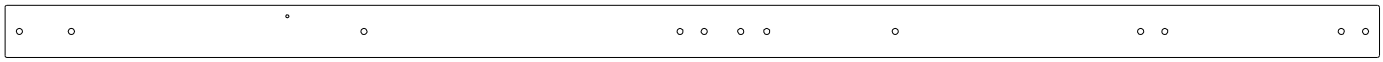

E6 (x1) | **FORT UPRIGHT - W4L16347**
1 3/8"x3 3/8"x89 1/2" (36x86x2274)

E7 (x1) | **PICNIC UPRIGHT - W4L16843**
1 3/8"x3 3/8"x56 1/8" (36x86x1426)

E77 (x2) | **ANGLE BRACE - W4L14652**
1 3/8"x3 3/8"x81" (36x86x2056)

F1 (x2) | **SEAT BRACE - W104012**
1 3/8"x2 3/8"x9 1/2" (36x60x240)

F2 (x2) | **SHELF BRACE - W4L16357**
1 3/8"x2 3/8"x11 3/4" (36x60x300)

F71 (x4) | **STANDARD ANGLE BRACE - W4L16342**
1 3/8"x2 3/8"x13" (36x60x330)

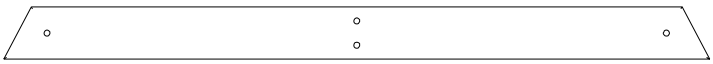

E50 (x1) | **END SUPPORT - W4L14651**
1 1/2"x3 1/2"x46" (36x86x1168)

F3 (x1) | **STANDARD ANGLE BRACE - W4L16343**
1 3/8"x2 3/8"x41 3/8" (36x60x1052)

G1 (x2) | **GROUND BOARD - W103967**
1"x5 1/4"x37 1/2" (24x134x952)

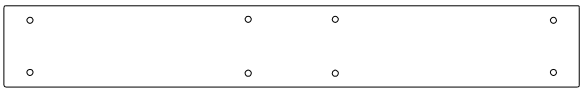

G2 (x1) | **SWING BEAM MOUNT - W103983**
1"x5 1/4"x37 1/2" (24x134x952)

G3 (x2) | **GROUND BOARD - W103969**
1"x5 1/4"x63 1/2" (24x134x1612)

G4 (x1) | **GROUND BOARD - W4L16338**
1"x5 1/4"x81 1/2" (24x134x2070)

Owner's Manual - Parts Identification

Wood Components (Not to Scale)

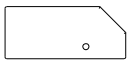

H1 (x2) | **SHELF SUPPORT - W104004**
1"x3 3/8"x7 7/8" (24x86x200)

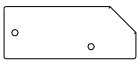

H2 (x2) | **SEAT SUPPORT - W104010**
1"x3 3/8"x8 5/8" (24x86x218)

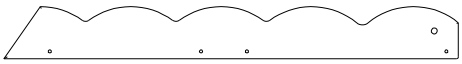

H3 (x6) | **ROOF SUPPORT - W104017**
1"x3 3/8"x29 5/8" (24x86x752)

H4 (x2) | **ROOF SUPPORT - W104024**
1"x3 3/8"x29 5/8" (24x86x752)

H5 (x1) | **SHELF BOARD - W104006**
1"x3 3/8"x37 1/2" (24x86x952)

H6 (x1) | **SHELF BOARD - W104007**
1"x3 3/8"x37 1/2" (24x86x952)

H7 (x1) | **SHELF BOARD - W104008**
1"x3 3/8"x37 1/2" (24x86x952)

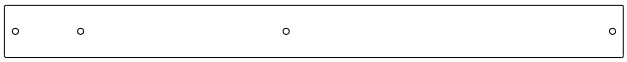

H8 (x1) | **FLOOR RAIL - W4L16341**
1"x3 3/8"x40 3/8" (24x86x1024)

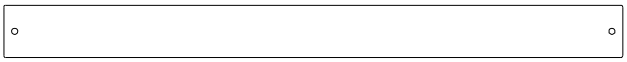

H9 (x1) | **FLOOR RAIL - W103972**
1"x3 3/8"x40 3/8" (24x86x1024)

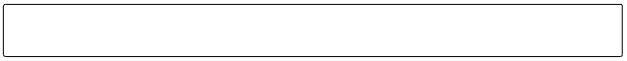

H10 (x1) | **FLOOR SUPPORT - W103980**
1"x3 3/8"x40 3/8" (24x86x1024)

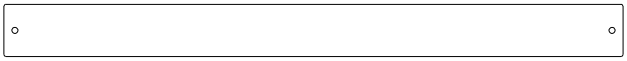

H11 (x1) | **FLOOR SUPPORT - W4L16355**
1"x3 3/8"x40 3/8" (24x86x1024)

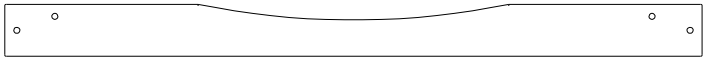

H12 (x1) | **ARCH BOARD - W103989**
1"x3 3/8"x45 3/8" (24x86x1154)

H13 (x1) | **DOUBLE ARCH BOARD - W103990**
1"x3 3/8"x45 3/8" (24x86x1154)

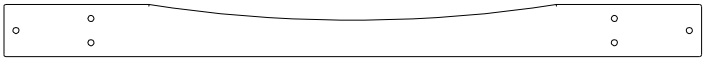

H14 (x1) | **LEMONADE ROOF SUPPORT - W104019**
1"x3 3/8"x45 3/8" (24x86x1154)

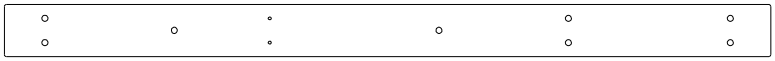

H15 (x2) | **FLOOR RAIL - W4L16349**
1"x3 3/8"x49 7/8" (24x86x1268)

H73 (x1) | **ROCK WALL RAIL - W4L16337**
1 3/8"x3 3/8"x50 7/8" (36x86x1292)

H74 (x1) | **ROCK WALL RAIL - W4L16339**
1 3/8"x3 3/8"x50 7/8" (36x86x1292)

H80 (x1) | **GROUND BOARD - W4L14653**
1"x3 3/8"x79 1/2" (24x86x2018)

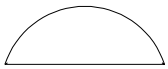

K80 (x3) | **SUNBURST HALF MOON - W103694**
5/8"x3 3/4"x10 3/8" (16x96x264)

K01 (x1) | **WALL RAIL - W4L16845**
5/8"x5 1/4"x37 1/2" (16x134x952)

M1 (x2) | **SHORT WALL RAIL - W103982**
5/8"x3 3/8"x8 1/4" (16x86x208)

M2 (x4) | **WALL SLAT - W104002**
5/8"x3 3/8"x9 1/2" (16x86x242)

M3 (x2) | **SHORT WALL RAIL - W4L16354**
5/8"x3 3/8"x10" (16x86x254)

Owner's Manual - Parts Identification

Wood Components (Not to Scale)

M4 (x5) | **WALL SLAT - W103995**
5/8"x3 3/8"x12 7/8" (16x86x326)

M5 (x1) | **WALL RAIL - W103993**
5/8"x3 3/8"x18 3/8" (16x86x468)

M6 (x9) | **WALL SLAT - W104009**
5/8"x3 3/8"x23 1/4" (16x86x590)

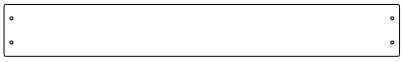

M7 (x18) | **WALL SLAT - W103997**
5/8"x3 3/8"x25 3/4" (16x86x654)

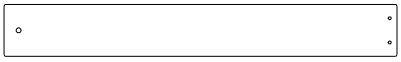

M8 (x4) | **WALL SLAT - W104001**
5/8"x3 3/8"x25 5/8" (16x86x650)

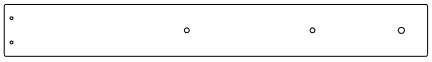

M9 (x1) | **WALL SLAT - W104028**
5/8"x3 3/8"x27 1/2" (16x86x700)

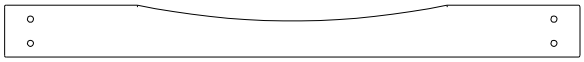

M10 (x1) | **ARCH WALL RAIL - W103987**
5/8"x3 3/8"x37 1/2" (16x86x952)

M11 (x2) | **WALL RAIL - W4L16350**
5/8"x3 3/8"x37 1/2" (16x86x952)

M12 (x1) | **WALL RAIL - W104003**
5/8"x3 3/8"x37 1/2" (16x86x952)

M13 (x1) | **WALL RAIL - W103973**
5/8"x3 3/8"x40 3/8" (16x86x1024)

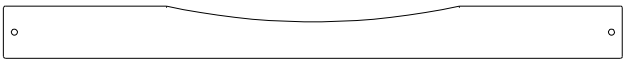

M14 (x1) | **ARCH WALL RAIL - W103978**
5/8"x3 3/8"x40 3/8" (16x86x1024)

M15 (x1) | **ARCH WALL RAIL - W103979**
5/8"x3 3/8"x40 3/8" (16x86x1024)

M16 (x2) | **WALL SLAT - W103998**
5/8"x3 3/8"x40 5/8" (16x86x1032)

M17 (x7) | **WALL SLAT - W103999**
5/8"x3 3/8"x44 5/8" (16x86x1134)

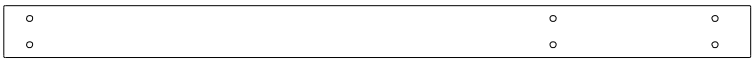

M18 (x2) | **WALL RAIL - W4L16348**
5/8"x3 3/8"x48 5/8" (16x86x1236)

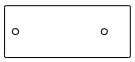

M19 (x2) | **SHORT WALL RAIL - W4L16352**
5/8"x3 3/8"x8 1/4" (16x86x208)

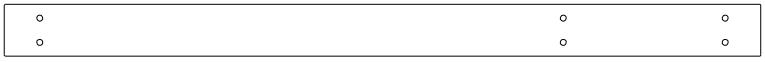

M20 (x2) | **WALL RAIL - W103975**
5/8"x3 3/8"x49 1/4" (16x86x1252)

M21 (x1) | **FLOOR BOARD - W4L16340**
5/8"x3 3/8"x49 7/8" (16x86x1268)

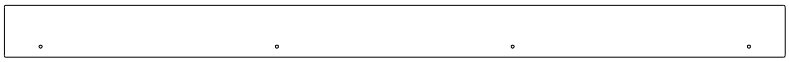

M22 (x1) | **UPRIGHT - W104014**
5/8"x3 3/8"x50 7/8" (16x86x1292)

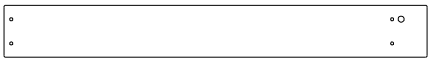

M23 (x2) | **WALL SLAT - W4L16353**
5/8"x3 3/8"x27 1/2" (16x86x700)

M24 (x2) | **WALL SLAT - W4L16351**
5/8"x3 3/8"x40 5/8" (16x86x1032)

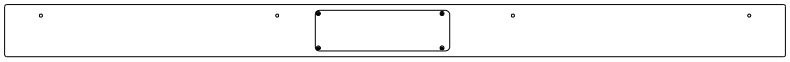

M25 (x1) | **UPRIGHT W/TAG - W2A03451**
5/8"x3 3/8"x50 7/8" (16x86x1292)

M26 (x1) | **ATTACHMENT BOARD - W4L16334**
1"x3 3/8"x23 1/4" (24x86x592)

M71 (x7) | **ROCK BOARD - W4L16335**
1"x3 3/8"x23 1/4" (24x86x592)

M72 (x1) | **ROCK WALL SLAT - W4L16336**
1"x3 3/8"x23 1/4" (24x86x592)

Owner's Manual - Parts Identification

Wood Components (Not to Scale)

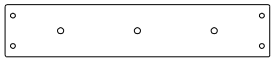

M77 (x1) | **SLIDE BRACE - W100544**
5/8"x3 3/8"x17 1/4" (16x86x438)

M78 (x2) | **CENTER SLIDE BRACE - W100545**
5/8"x3 3/8"x17 1/4" (16x86x438)

N1 (x2) | **OUTER FLOOR BOARD - W103992**
5/8"x2 3/8"x7 1/8" (16x60x180)

N2 (x2) | **WALL SLAT - W103996**
5/8"x2 3/8"x25 3/4" (16x60x654)

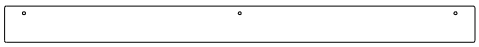

N3 (x2) | **OUTER FLOOR BOARD - W103991**
5/8"x2 3/8"x30 5/8" (16x60x778)

N4 (x3) | **HORIZONTAL SUNBURST BOARD - W104025**
5/8"x2 3/8"x38" (16x60x966)

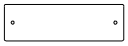

N91 (x6) | **SUNBURST SPOKE - W104026**
5/8"x2 3/8"x7 3/4" (16x60x198)

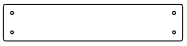

N92 (x3) | **VERTICAL SUNBURST SPOKE - W104027**
5/8"x2 3/8"x11 5/8" (16x60x296)

Q1 (x1) | **SEAT BOARD - W104011**
1"x4 3/8"x37 1/2" (24x112x952)

Q2 (x1) | **SEAT BOARD - W104013**
1"x4 3/8"x37 1/2" (24x112x952)

W71 (x1) | **SWING BEAM SUPPORT - W4L14654**
2"x3 3/8"x50 3/8" (50x86x1280)

SB74 (x1) | **SWING BEAM EXTENDED - W4L16844**
2"x5 1/4"x89 1/2" (50x134x2274)

Owner's Manual - Parts Identification

Wood Components (Not to Scale)

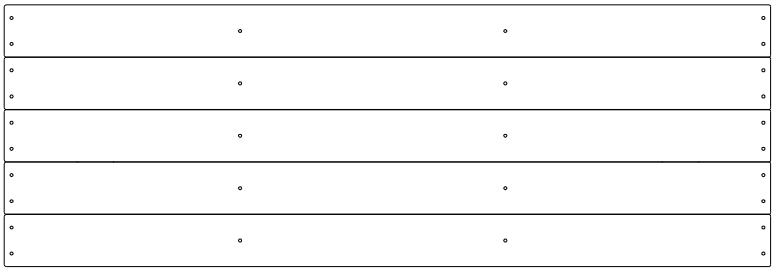

FP1 (x2) | **FLOOR PANEL - W2A03452**
1 1/4"x17"x49 7/8" (32x432x1268)

RP1 (x2) | **ROOF PANEL - W104015**
1 5/8"x15 5/8"x46" (42x396x1168)

RP2 (x2) | **ROOF PANEL - W104016**
1 5/8"x15 5/8"x46" (42x396x1168)

RP3 (x1) | **ROOF PANEL - W104020**
1 5/8"x15 5/8"x26 1/2" (42x396x672)

RP4 (x1) | **ROOF PANEL - W104021**
1 5/8"x15 5/8"x46" (42x396x672)

RP5 (x1) | **ROOF PANEL - W104022**
1 5/8"x15 5/8"x46" (42x396x672)

RP6 (x1) | **ROOF PANEL - W104023**
1 5/8"x15 5/8"x46" (42x396x672)

Owner's Manual - Parts Identification

Hardware Components

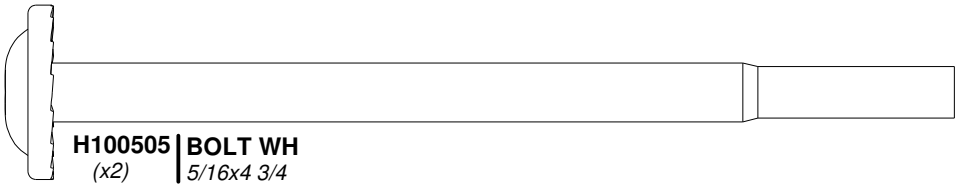

H100505 | **BOLT WH**
(x2) | *5/16x4 3/4*

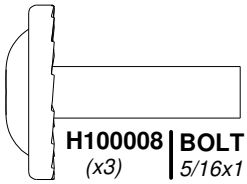

H100008 | **BOLT WH**
(x3) | *5/16x1*

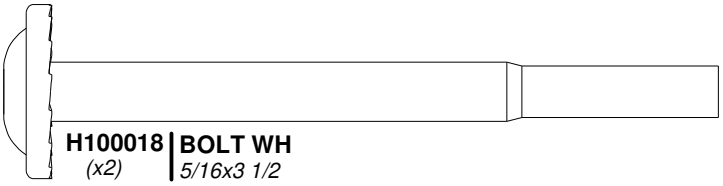

H100018 | **BOLT WH**
(x2) | *5/16x3 1/2*

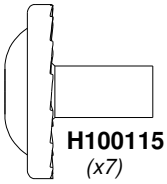

H100115 | **BOLT WH**
(x7) | *5/16x1/2*

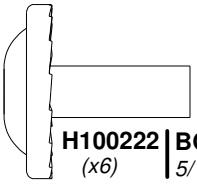

H100222 | **BOLT WH**
(x6) | *5/16x3/4*

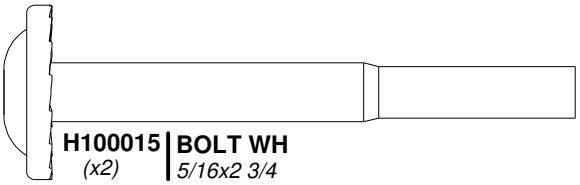

H100015 | **BOLT WH**
(x2) | *5/16x2 3/4*

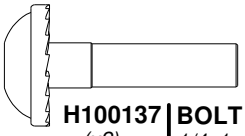

H100137 | **BOLT WH**
(x2) | *1/4x1*

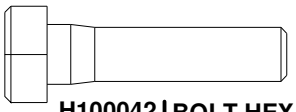

H100042 | **BOLT HEX**
(x4) | *5/16x1 1/4*

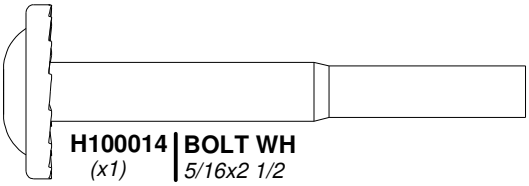

H100014 | **BOLT WH**
(x1) | *5/16x2 1/2*

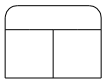

H100110 | **NUT LOCK**
(x9) | *5/16*

H100047 | **BOLT HEX**
(x2) | *5/16x2 3/4*

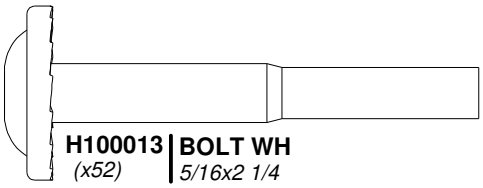

H100013 | **BOLT WH**
(x52) | *5/16x2 1/4*

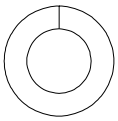

H100095 | **WASHER SPLIT**
(x4) | *5/16*

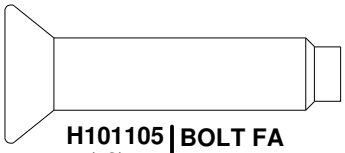

H101105 | **BOLT FA**
(x8) | *3/8x1 3/4*

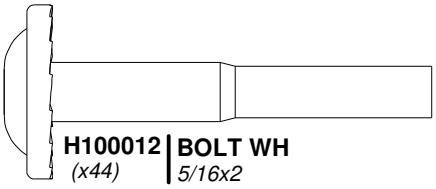

H100012 | **BOLT WH**
(x44) | *5/16x2*

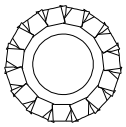

H100138 | **WASHER LOCK EXT**
(x14) | *6x15*

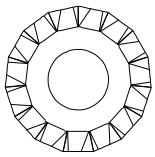

H100030 | **WASHER LOCK EXT**
(x145) | *8x19*

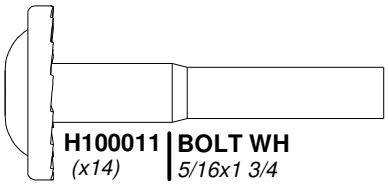

H100011 | **BOLT WH**
(x14) | *5/16x1 3/4*

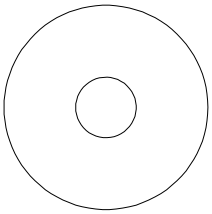

H100105 | **WASHER FLAT**
(x15) | *8x27*

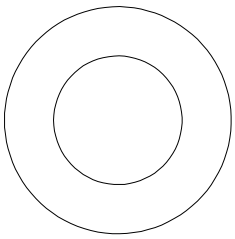

H100103 | **WASHER SAFETY**
(x7) | *17x30*

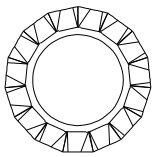

H100031 | **WASHER LOCK EXT**
(x3) | *12x19*

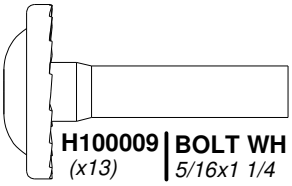

H100009 | **BOLT WH**
(x13) | *5/16x1 1/4*

Owner's Manual - Parts Identification

Hardware Components

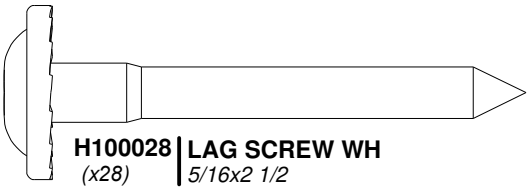

H100028 (x28) | **LAG SCREW WH** *5/16x2 1/2*

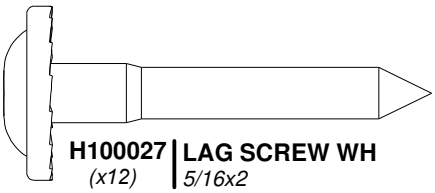

H100027 (x12) | **LAG SCREW WH** *5/16x2*

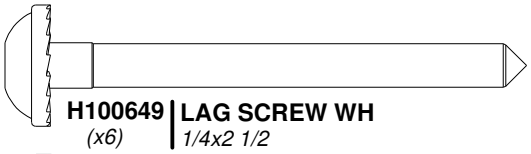

H100649 (x6) | **LAG SCREW WH** *1/4x2 1/2*

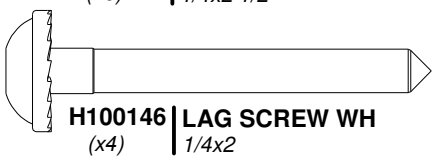

H100146 (x4) | **LAG SCREW WH** *1/4x2*

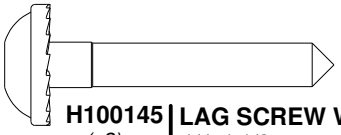

H100145 (x2) | **LAG SCREW WH** *1/4x1 1/2*

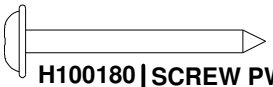

H100180 (x9) | **SCREW PWH** *8x1-1/4*

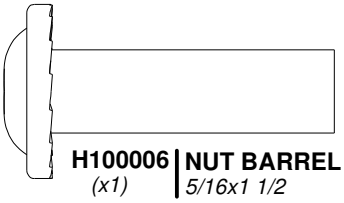

H100006 (x1) | **NUT BARREL WH** *5/16x1 1/2*

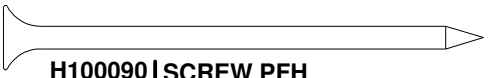

H100090 (x30) | **SCREW PFH** *8x2 1/2"*

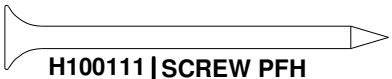

H100111 (x39) | **SCREW PFH** *8x2*

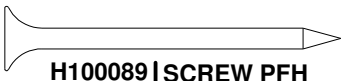

H100089 (x52) | **SCREW PFH** *8x1 3/4*

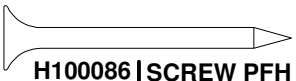

H100086 (x97) | **SCREW PFH** *8x1 1/2*

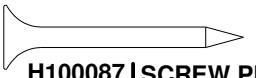

H100087 (x26) | **SCREW PFH** *8x1 1/4*

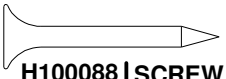

H100088 (x250) | **SCREW PFH** *8x1 1/8*

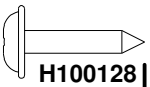

H100128 (x7) | **SCREW PWH** *8x5/8*

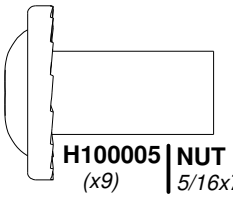

H100005 (x9) | **NUT BARREL WH** *5/16x7/8*

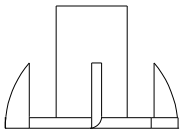

H100074 (x135) | **T-NUT** *5/16*

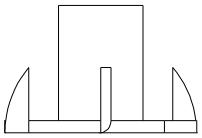

H100073 (x8) | **T-NUT** *3/8*

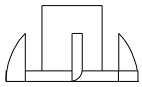

H100072 (x2) | **T-NUT** *1/4*

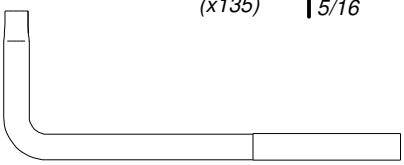

A100041 (x1) | **T-40 TORX WRENCH**

H100147 (x1) | **T-30 TORX BIT**

H100114 (x1) | **T-30 TORX WRENCH**

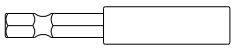

H101100 (x1) | **MAGNETIC DRIVER**

A100042 (x1) | **T-40 TORX BIT**

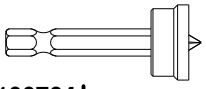

H100764 (x1) | **SCREW SETTER**

Owner's Manual - Parts Identification

Accessory Components (Not to Scale)

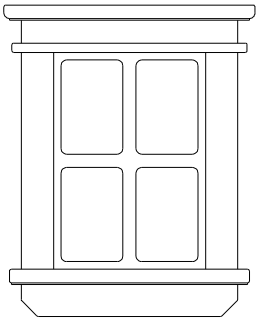

A100320 (x2) | PLASTIC WINDOW 44x266x329

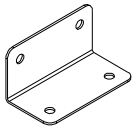

A100140 (x2) | L BRACKET 66x66x127

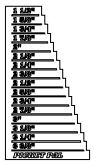

A6P00410 (x1) | PICKET PAL

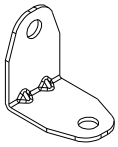

A4M01046 (x5) | L BRACKET 2.5x38x55x55

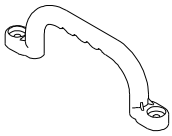

A100028 (x2) | HAND GRIP GREEN PLASTIC

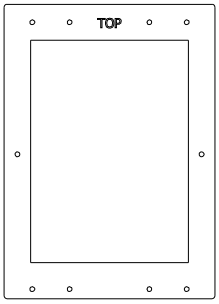

A100364 (x2) | SMALL PLASTIC WINDOW INSIDE TRIM

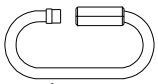

A100069 (x6) | QUICK LINK

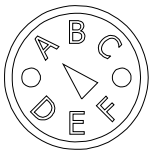

A100314 (x1) | "A" REVISION TAG

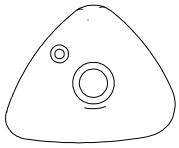

A100060 (x7) | CLIMBING ROCK GREEN SMALL

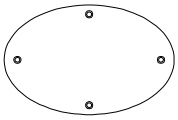

A100164 (x1) | BYD ID TAG (LARGE) AGES 3-10

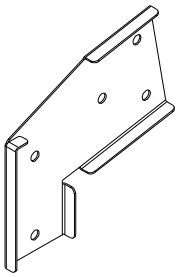

A100325 (x1) | SWING BEAM EXTENSION BRACKET-LEFT

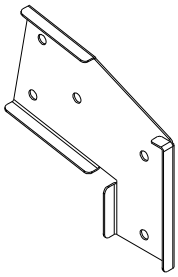

A100326 (x1) | SWING BEAM EXTENSION BRACKET-RIGHT

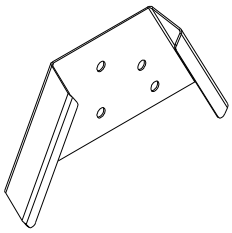

A4M01169 (x1) | A-FRAME BRACKET

Owner's Manual - Parts Identification

Accessory Components (Not to Scale)

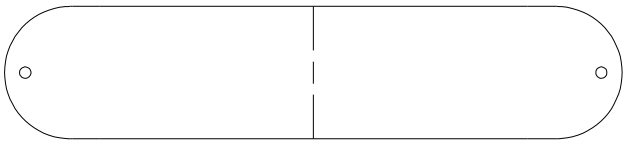

A100027 *(x2)* | **SWING SEAT GREEN 26"**

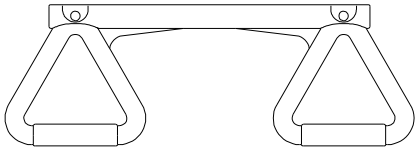

A6P00034 *(x1)* | **TRAPEZE YELLOW**

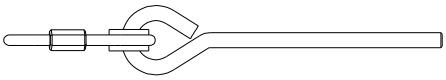

H100099 *(x6)* | **9 1/2" SWING HANGER QUICK LINK**

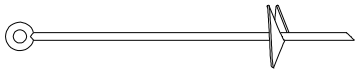

A100178 *(x6)* | **AUGER GROUND STAKE**

A100177 *(x2)* | **CHAIN GREEN 31"**

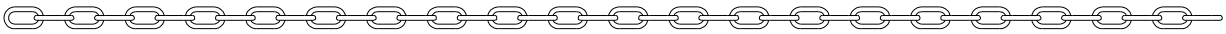

A100068 *(x4)* | **CHAIN GREEN 51.25"**

A100056 *(x1)* | **SLIDE BED 8' YELLOW**

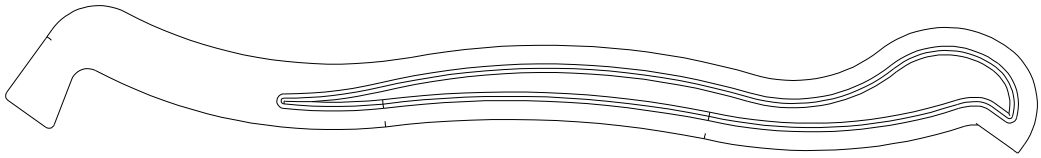

A100055 *(x1)* | **SLIDE RAIL 8' GREEN LEFT**

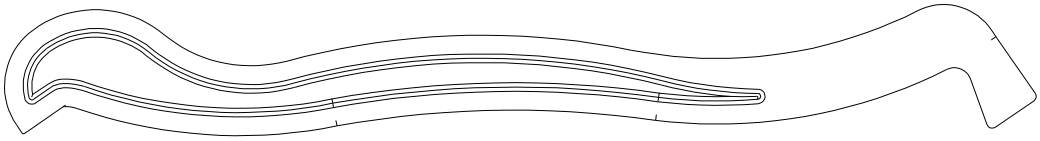

A100054 *(x1)* | **SLIDE RAIL 8' GREEN RIGHT**

PRE-ASSEMBLY STEP 1 - SORTING PARTS

It is critical for ease of assembly that you take the time to sort and organize the wood and hardware.

WOOD PARTS:

- **Organize wood parts by the three-digit, alpha-numeric number stamped on each board (ex. P01).**
- **If there are multiple boards with the same stamped number, stack those pieces together.**
- **Stamps can be found on the flat surface of the boards or on the end of the boards.**
- **Allow yourself plenty of room - the wood pieces can take up a significant amount of space.**

NOTE: CARTONS ARE NOT ORGANIZED BY BOARD NUMBER.

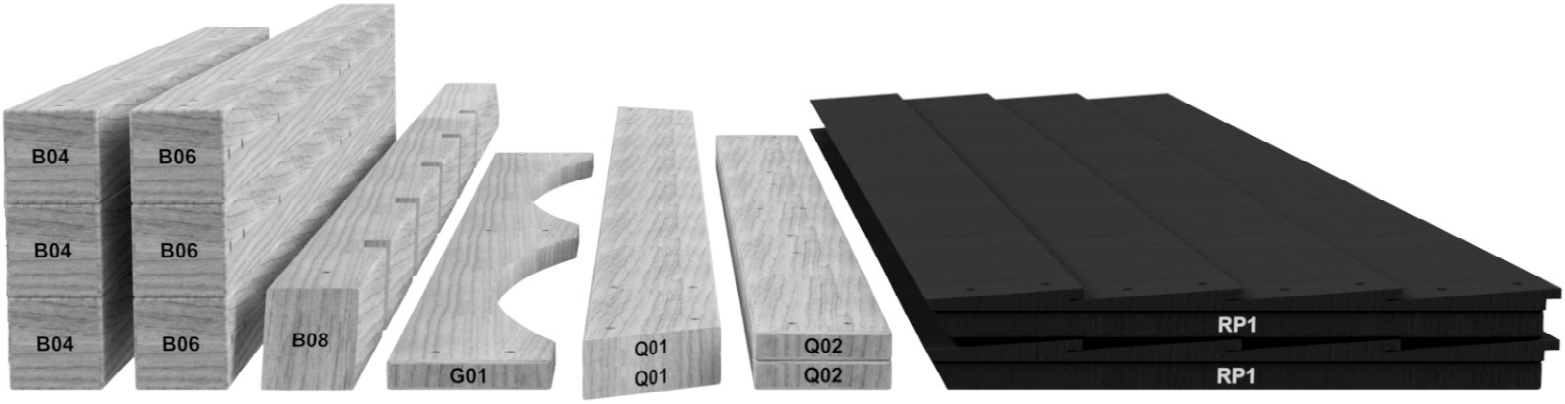

HARDWARE PARTS:

- **We recommend that you have a separate table to organize the hardware.**
- **Hardware bags are printed with a seven-digit, alpha-numeric part number.**
- **You can organize your hardware by part number or group by hardware type (i.e. bolts, nuts, etc.).**
- **During assembly you only need to reference the last four digits of the number.**

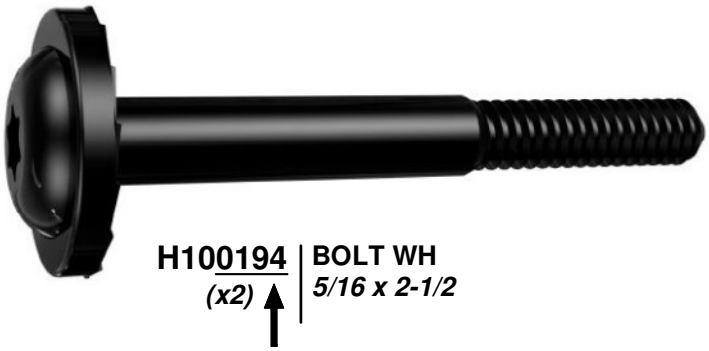

PRE-ASSEMBLY STEP 2 - TOOLS REQUIRED

Cordless Drill or
Electric Drill

Drill Attachments:
Phillips Head

1/8", 3/16", 3/8" & 7/16"
Drill Bits

Phillips Screw Driver

Open End Wrenches 1/2" & 9/16"

3/8" Drive Ratchet, 1/2" &
9/16" STD Sockets 1/2" & 9/16" Deep
Sockets

Claw Hammer

Rubber Mallet - Optional

Tape Measure

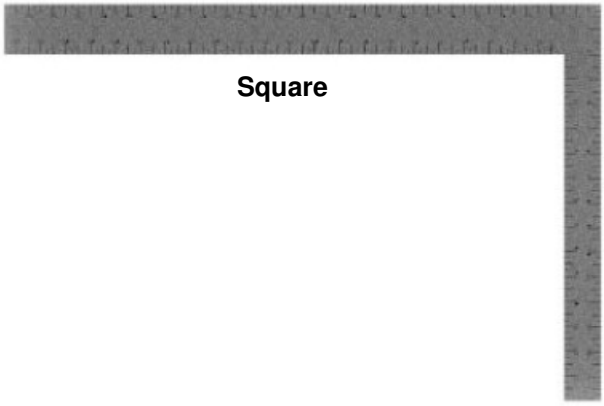

Square

Level 24"

PRE-ASSEMBLY STEP 3 - CHOOSE YOUR ASSEMBLY METHOD

There are several types of assembly instructions available to you.

1. **Printed Assembly Manual included with your set**
2. **BILT APP - 3D interactive instructions**
3. **Combination of the Printed Manual and BILT APP (Note: Step numbers can differ between the two methods)**

STEP 1 - SWING BEAM ASSEMBLY

QTY	PART NUMBER	DESCRIPTION
3	H100005	NUT BARREL WH 5/16x7/8
3	H100011	BOLT WH 5/16x1 3/4
2	H100047	BOLT HEX 5/16x2-3/4
4	H100105	WASHER FLAT 8x27
2	H100110	NUT LOCK 5/16

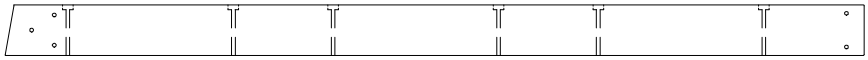

SB74 *(x1)* | **SWING BEAM EXTENDED - W4L16844**
2"x5 1/4"x89 1/2" (50x134x2274)

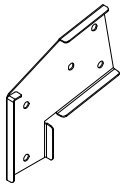

A100325 *(x1)* | **SWING BEAM EXTENSION BRACKET-LEFT**

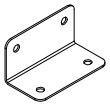

A100140 *(x2)* | **L BRACKET 66x66x127**

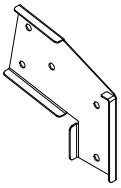

A100326 *(x1)* | **SWING BEAM EXTENSION BRACKET-RIGHT**

140 *(x2)*
L BRACKET 66x66x127

047 *(x2)*
BOLT - 2 3/4"

105 *(x2)*
WASHER - 8x27

SB74 *(x1)*
SWING BEAM EXTENDED

LEAVE 011 BOLTS HAND TIGHT AT THIS TIME

011 *(x3)*
BOLT - 1 3/4"

105 *(x2)*
WASHER - 8x27

110 *(x2)*
NUT - 5/16"

005 *(x3)*
NUT BARREL - 7/8"

326 *(x1)*
SWING BEAM EXTENSION BRACKET-RIGHT

325 *(x1)*
SWING BEAM EXTENSION BRACKET-LEFT

STEP 2 - SWING BEAM ASSEMBLY

QTY	PART NUMBER	DESCRIPTION
6	H100103	WASHER SAFETY 17x30
6	H100110	NUT LOCK 5/16
6	H100105	WASHER FLAT 8x27

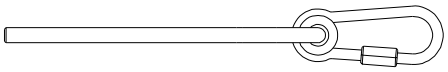

H100099 *(x6)* | **SWING HANGER** *5/16x9 1/2*

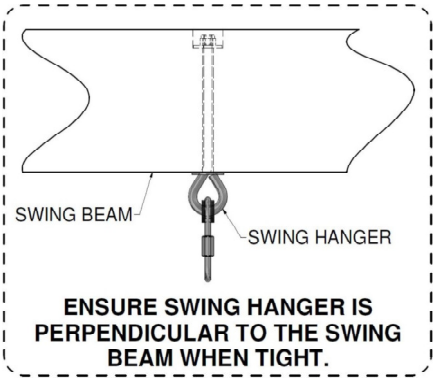

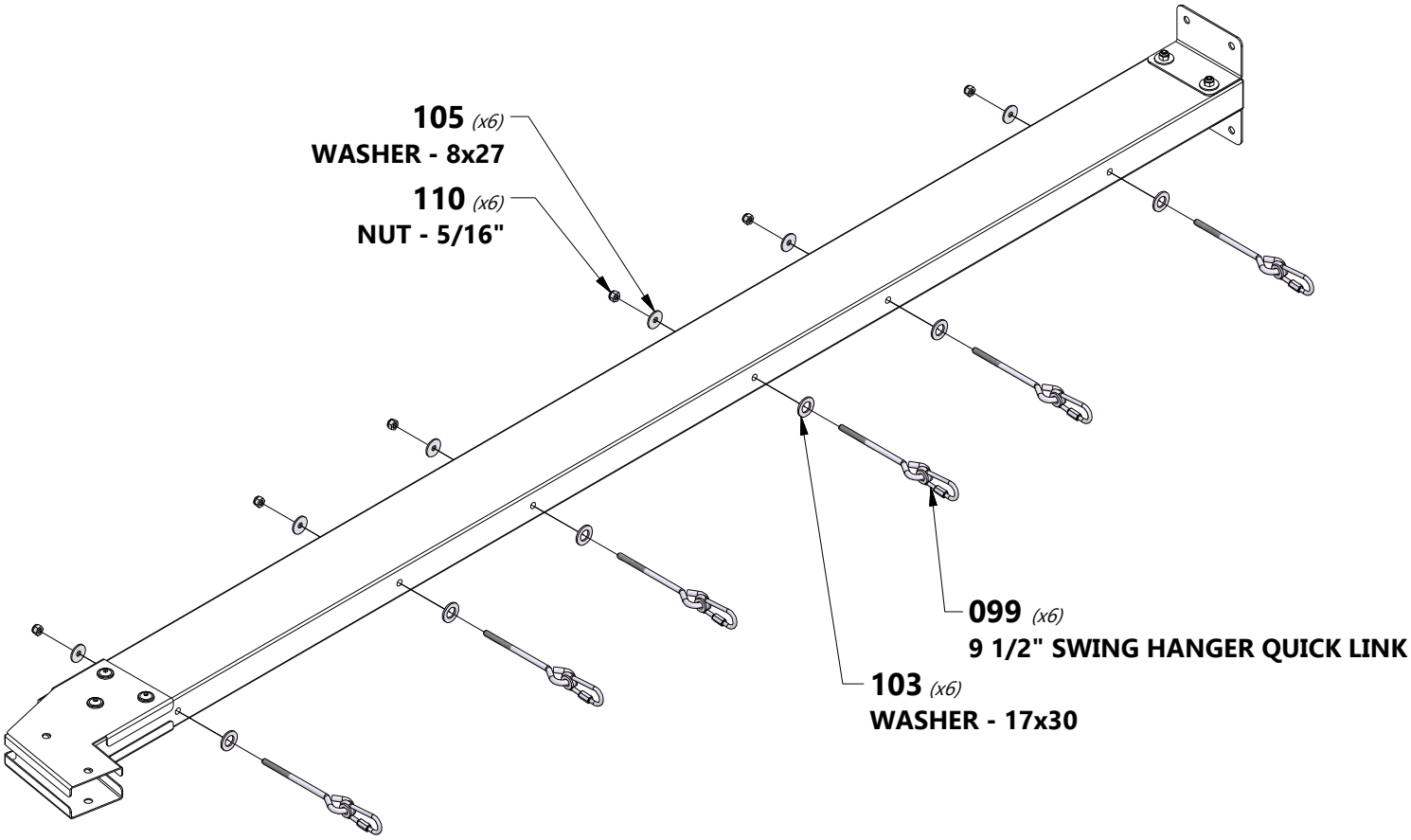

STEP 3 - SWING BEAM ASSEMBLY

QTY	PART NUMBER	DESCRIPTION
4	H100128	SCREW PWH 8x5/8

A100164 *(x1)* | **BYD ID TAG**

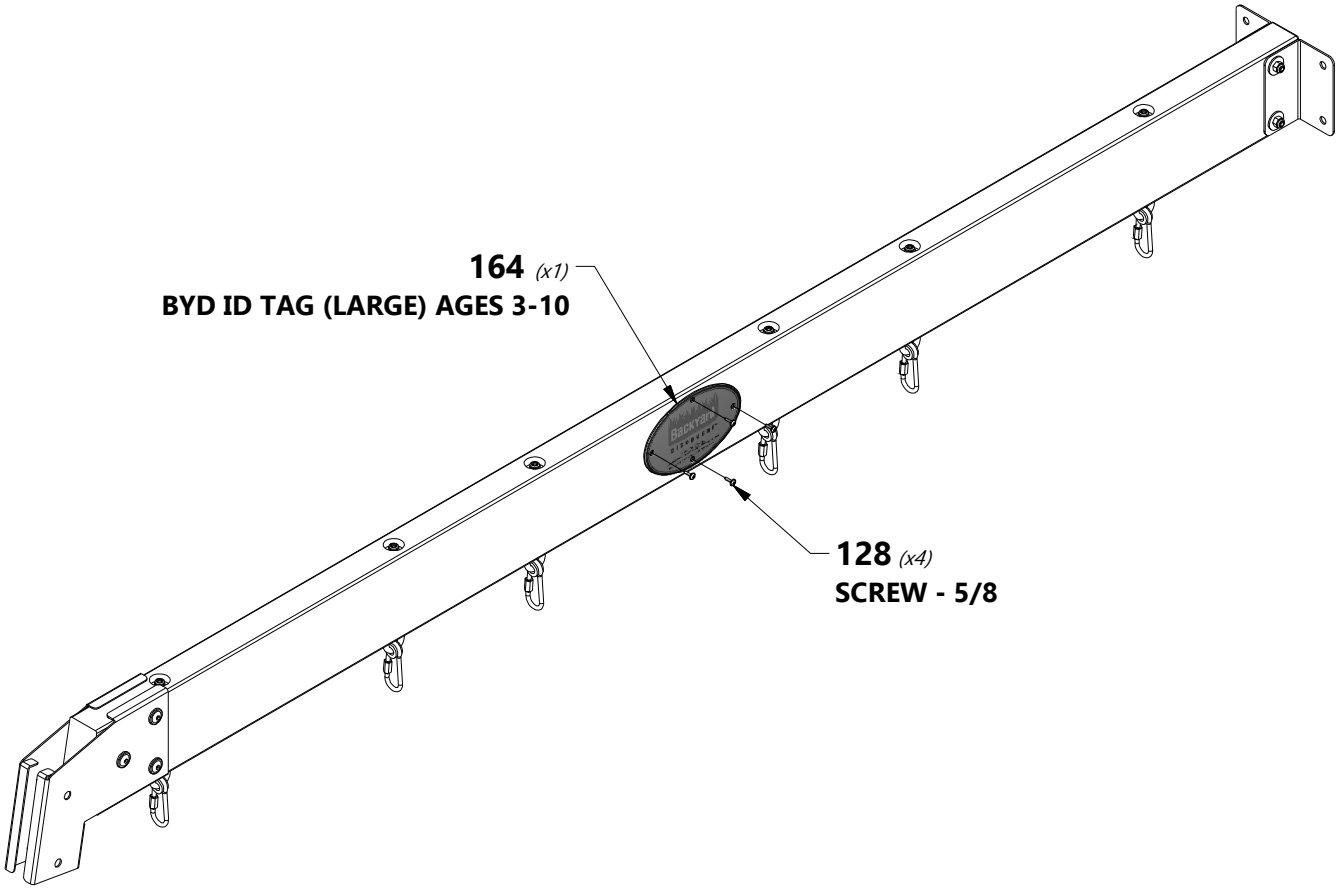

STEP 4 - SWING BEAM ASSEMBLY

QTY	PART NUMBER	DESCRIPTION
4	H100009	BOLT WH 5/16x1 1/4
2	H100018	BOLT WH 5/16x3 1/2
6	H100074	T-NUT 5/16

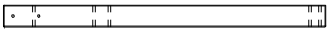

W71 (x1) | **SWING BEAM SUPPORT - W4L14654**
2"x3 3/8"x50 3/8" (50x86x1280)

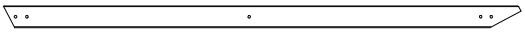

E77 (x2) | **ANGLE BRACE - W4L14652**
1 3/8"x3 3/8"x81" (36x86x2056)

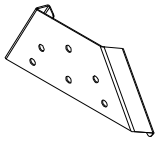

A4M01169 (x1) | **A-FRAME BRACKET**

TIP:
INSTALL T-NUTS IN WOOD FIRST

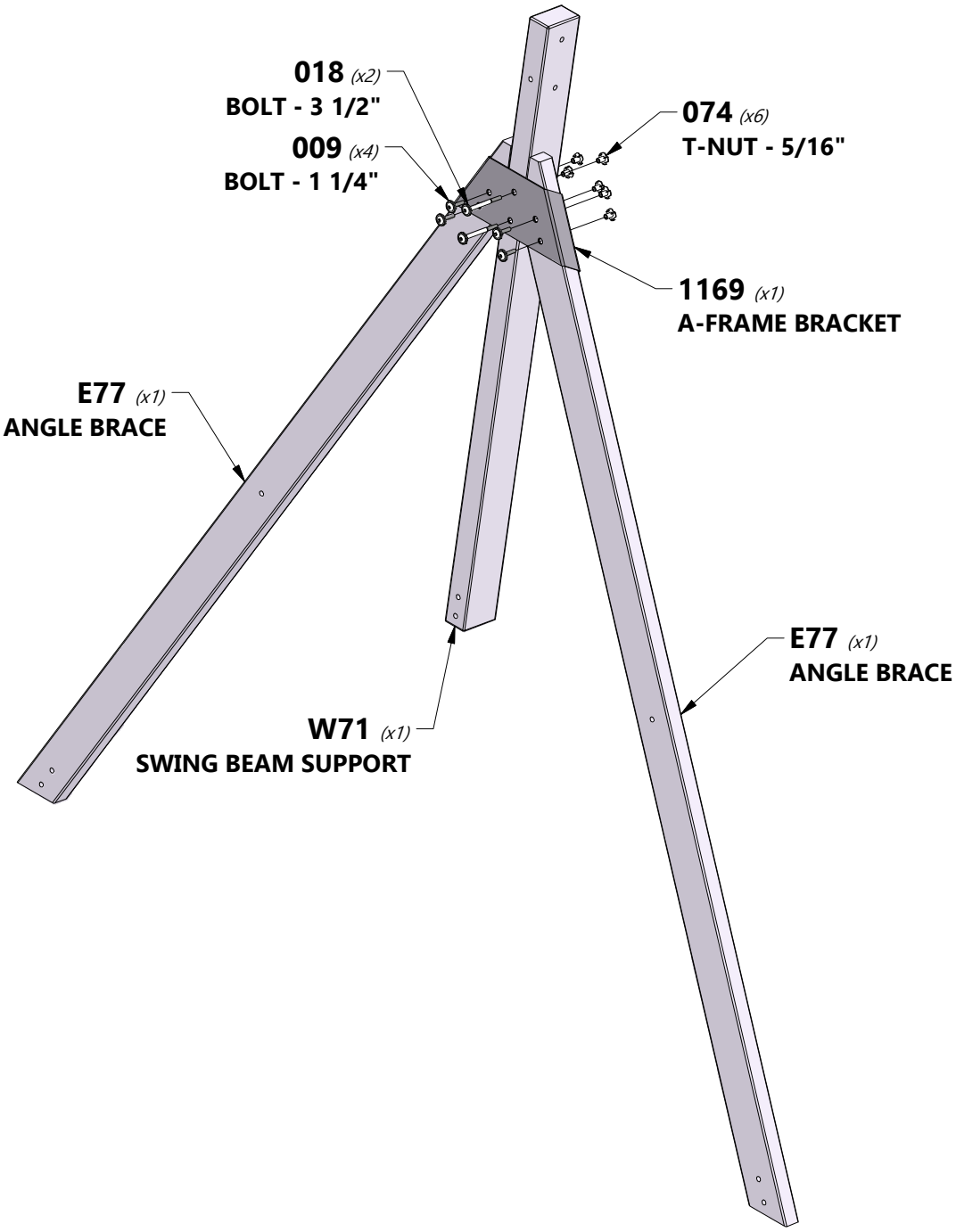

STEP 5 - SWING BEAM ASSEMBLY

QTY	PART NUMBER	DESCRIPTION
4	H100013	BOLT WH 5/16x2 1/4
8	H100030	WASHER LOCK EXT 8x19
8	H100074	T-NUT 5/16
2	H100015	BOLT WH 5/16x2 3/4
2	H100505	BOLT WH 5/16x4 3/4

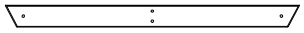

E50 *(x1)* | **END SUPPORT - W4L14651**
1 1/2"x3 1/2"x46" (36x86x1168)

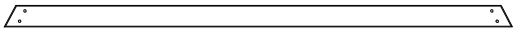

H80 *(x1)* | **GROUND BOARD - W4L14653**
1"x3 3/8"x79 1/2" (24x86x2018)

TIP:
INSTALL T-NUTS IN WOOD FIRST

E50 *(x1)*
END SUPPORT

H80 *(x1)*
GROUND BOARD

505 *(x2)*
BOLT - 5/16x4 3/4"

074 *(x8)*
T-NUT - 5/16"

030 *(x8)*
WASHER - 8x19

015 *(x2)*
BOLT - 5/16x2 3/4"

013 *(x4)*
BOLT - 2 1/4"

STEP 6 - SWING BEAM ASSEMBLY

QTY	PART NUMBER	DESCRIPTION
2	H100005	NUT BARREL WH 5/16x7/8
1	H100006	NUT BARREL WH 5/16x1 1/2
2	H100011	BOLT WH 5/16x1 3/4
1	H100014	BOLT WH 5/16x2 1/2

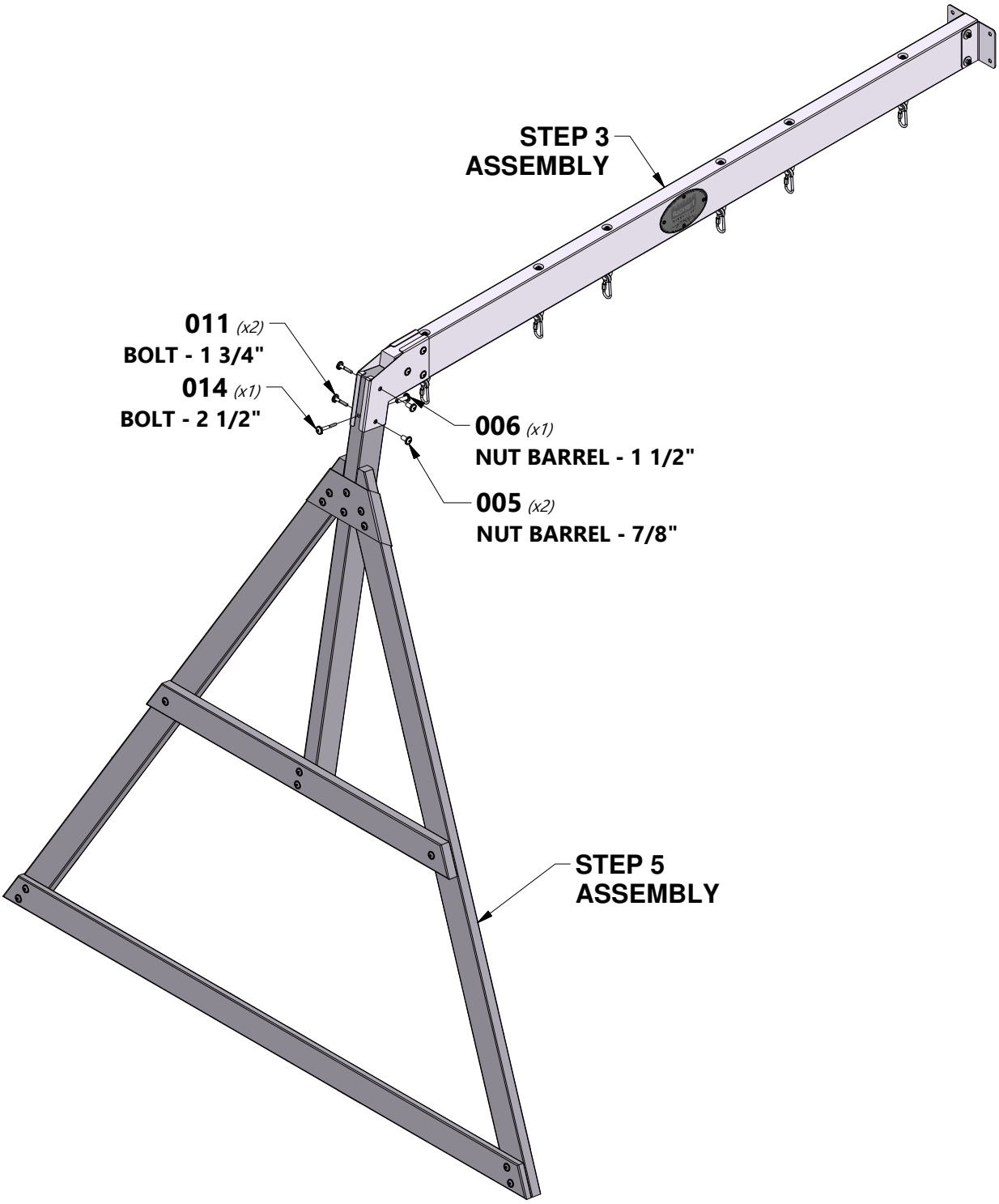

STEP 1 - ROCK LADDER ASSEMBLY

QTY	PART NUMBER	DESCRIPTION
7	H100073	T-NUT 3/8
7	H100086	SCREW PFH 8x1-1/2"
7	H101105	BOLT FA 3/8x1 3/4

M71 *(x7)* | **ROCK BOARD - W4L16335**
1"x3 3/8"x23 1/4" (24x86x592)

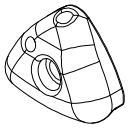

A100060 *(x7)* | **CLIMBING ROCK GREEN SMALL**

TIP:
INSTALL T-NUTS IN WOOD FIRST

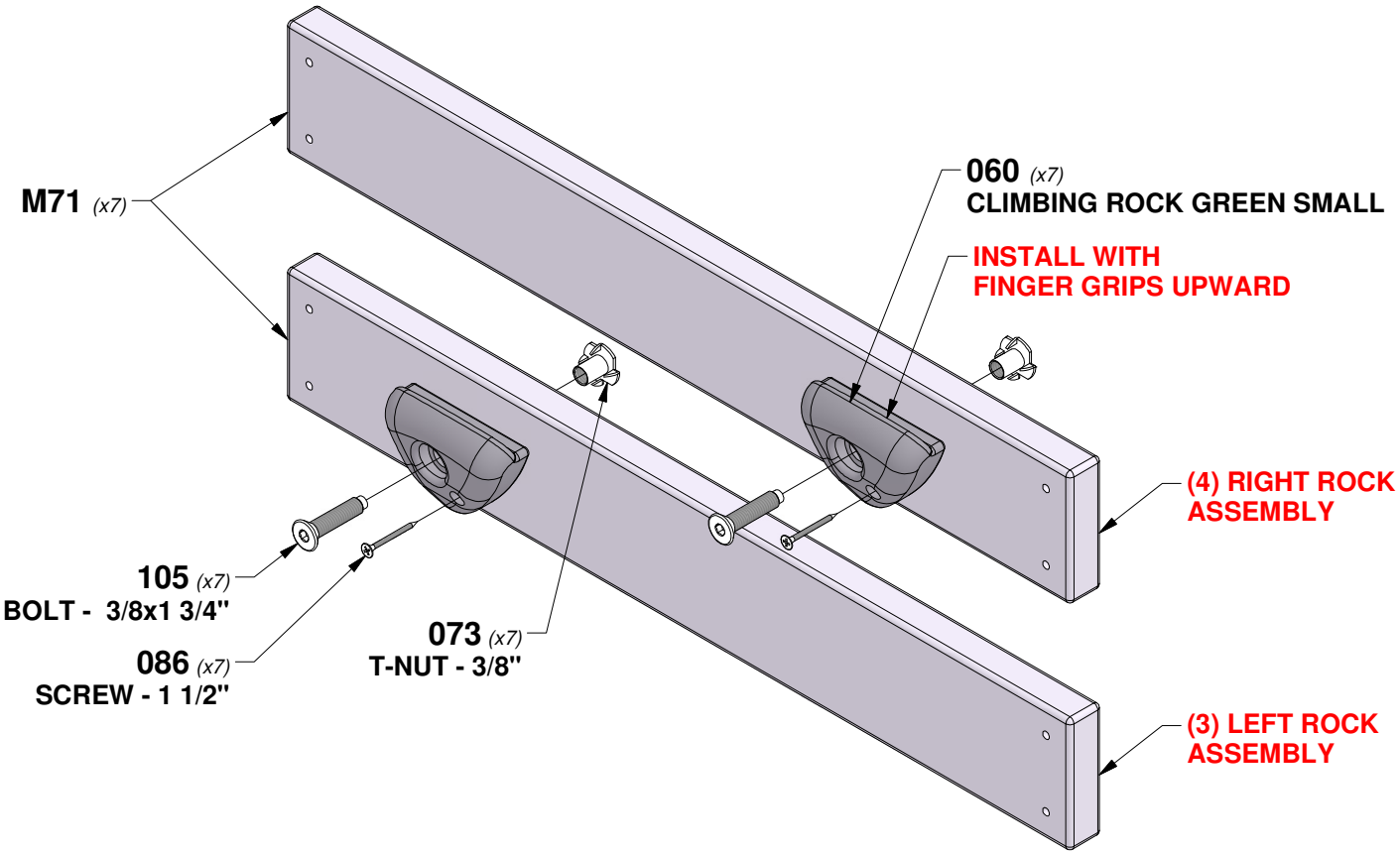

STEP 2 - ROCK LADDER ASSEMBLY

QTY	PART NUMBER	DESCRIPTION
32	H100089	SCREW PFH 8x1-3/4"

M72 *(x1)* | **ROCK WALL SLAT - W4L16336**
1"x3 3/8"x23 1/4" (24x86x592)

H73 *(x1)* | **ROCK WALL RAIL - W4L16337**
1 3/8"x3 3/8"x50 7/8" (36x86x1292)

H74 *(x1)* | **ROCK WALL RAIL - W4L16339**
1 3/8"x3 3/8"x50 7/8" (36x86x1292)

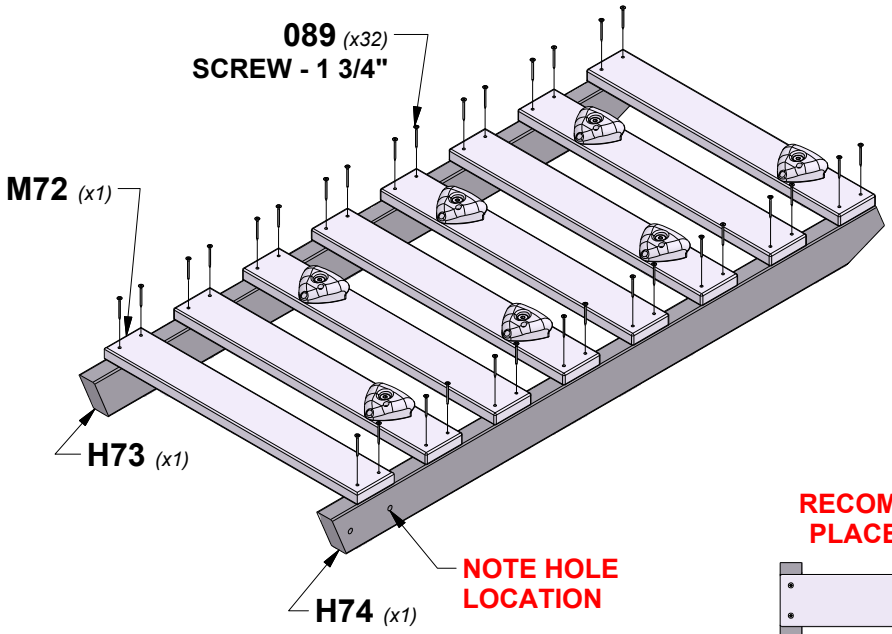

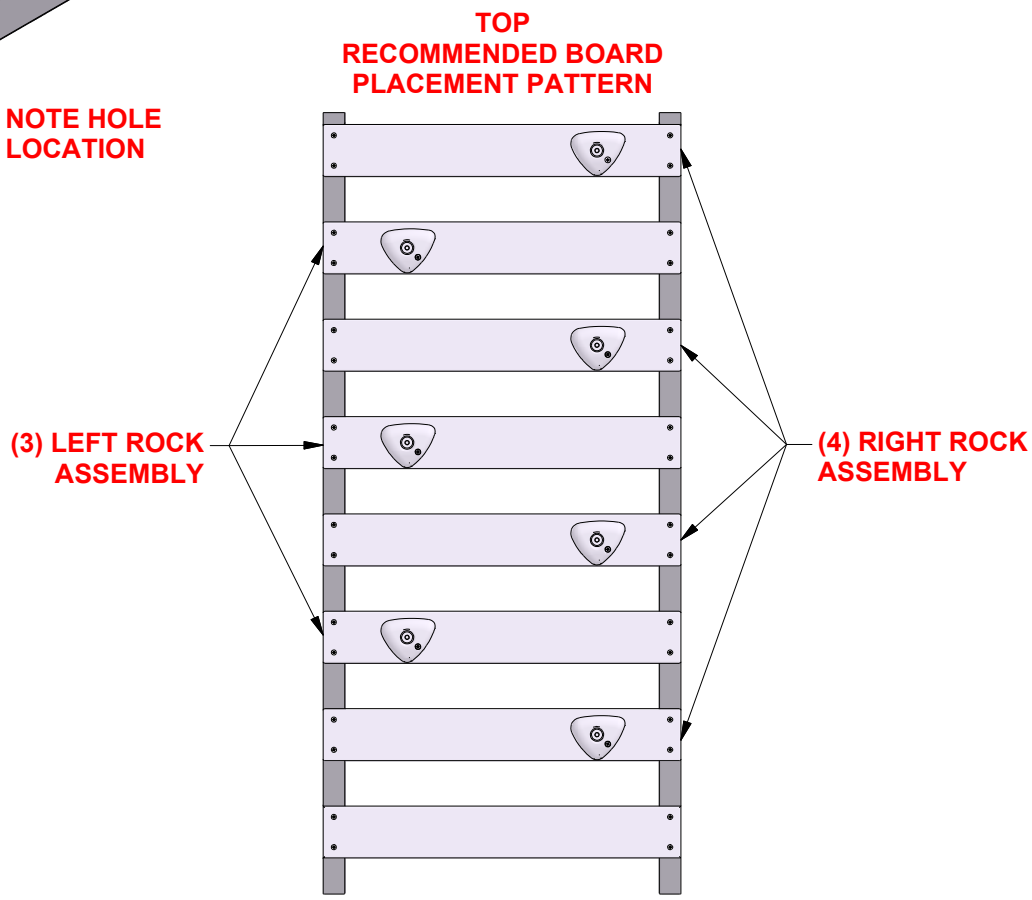

STEP 3 - ROCK LADDER ASSEMBLY

QTY	PART NUMBER	DESCRIPTION
4	H100089	SCREW PFH 8x1-3/4"

M26 *(x1)* | **ATTACHMENT BOARD - W4L16334**
1"x3 3/8"x23 1/4" (24x86x592)

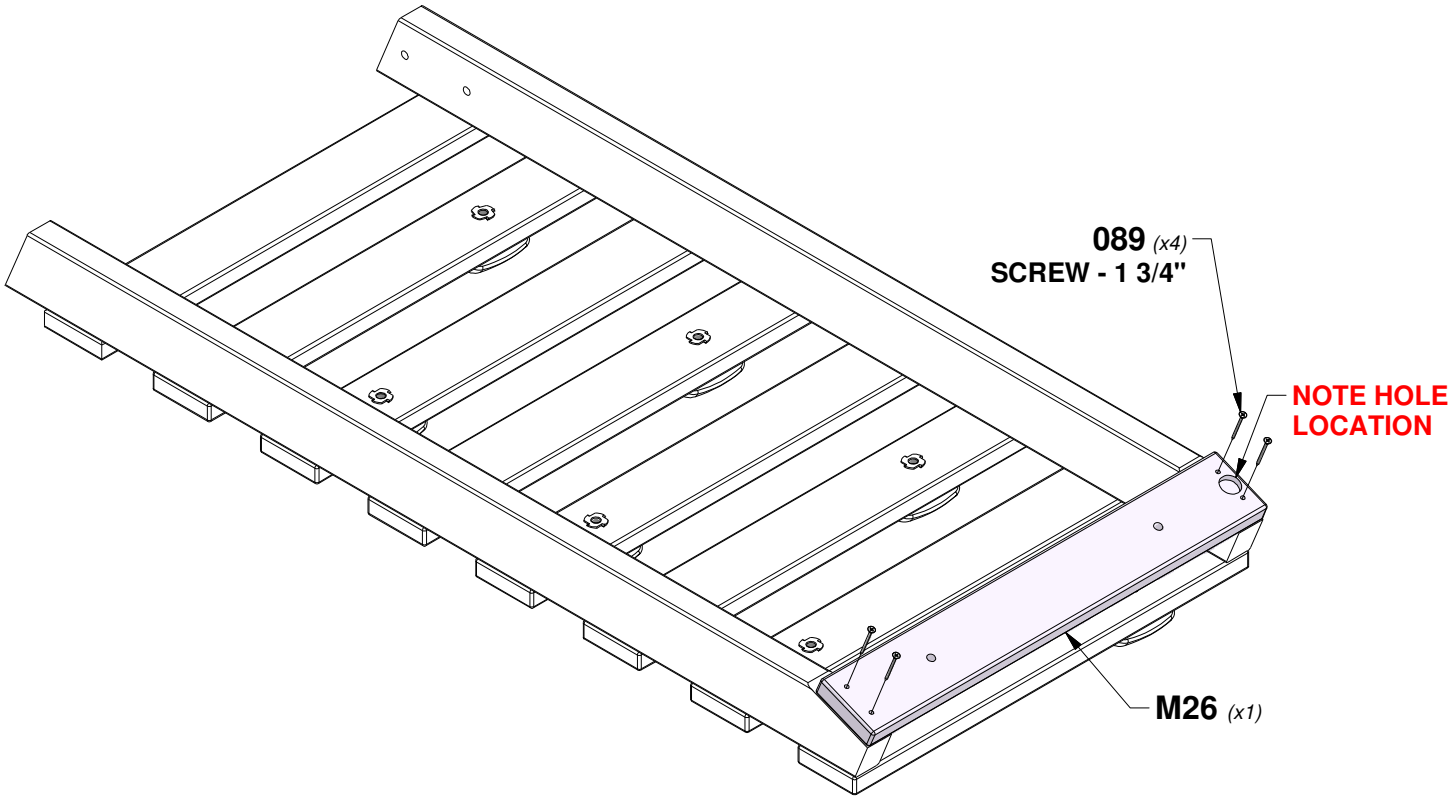

STEP 1 - SLIDE ASSEMBLY

QTY	PART NUMBER	DESCRIPTION
3	H100074	T-NUT 5/16
3	H100115	BOLT WH 5/16x1/2

A100056 *(x1)* | **SLIDE BED 8' YELLOW**

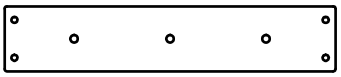

M77 *(x1)* | **SLIDE BRACE - W100544**
5/8"x3 3/8"x17 1/4" (16x86x438)

NOTE:
TAKE NOTE OF SLIDE BED SURFACE FINISH, THE DULL SIDE WILL BE TOWARDS THE GROUND. PLACE SLIDE BRACE CENTERED ON THE BOTTOM (DULL SIDE) AND 1/2" FROM THE EDGE. USE M77 BOARD AS A TEMPLATE FOR DRILLING BOTTOM HOLE PATTERN IN SLIDE BED. USE A 5/16" DRILL BIT.

TIP:
INSTALL T-NUTS INTO BOARDS BEFORE ASSEMBLY

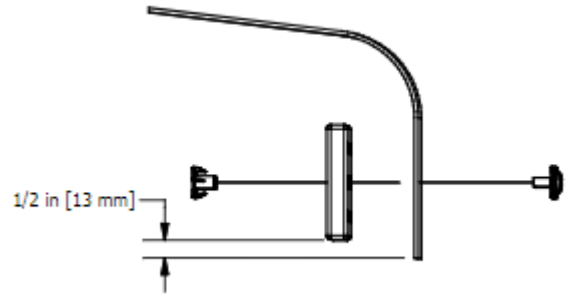

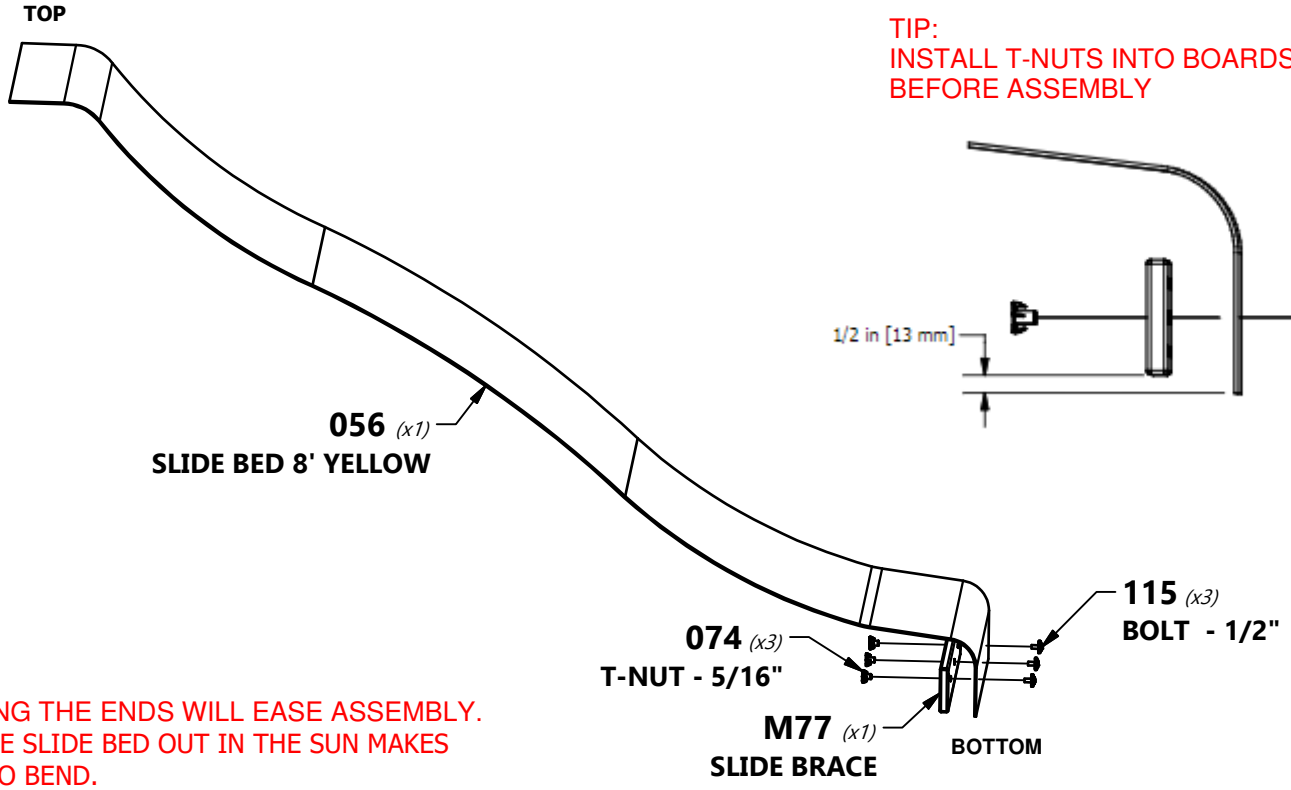

TIP:
PREBENDING THE ENDS WILL EASE ASSEMBLY. PLACING THE SLIDE BED OUT IN THE SUN MAKES IT EASIER TO BEND.

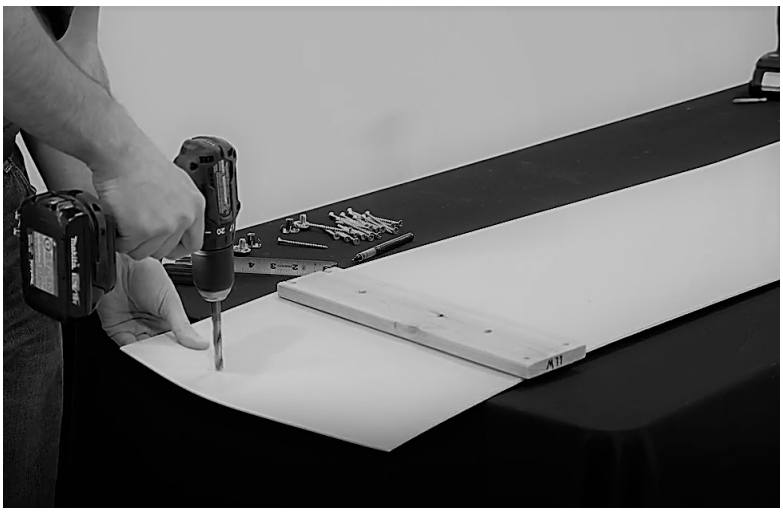

STEP 2 - SLIDE ASSEMBLY

QTY	PART NUMBER	DESCRIPTION
24	H100090	SCREW PFH 8x2 1/2

A100054 *(x1)* | **SLIDE RAIL 8' GREEN RIGHT**

A100055 *(x1)* | **SLIDE RAIL 8' GREEN LEFT**

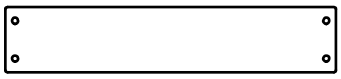

M78 *(x2)* | **CENTER SLIDE BRACE - W100545**
5/8"x3 3/8"x17 1/4" (16x86x438)

NOTE:
PLACE THE SLIDE RAIL ON FLAT SURFACE. STARTING AT THE BOTTOM, INSERT THE SLIDE BED INTO THE CHANNEL ON THE INSIDE OF THE RAIL. HOLD THE SLIDE BED IN PLACE WHILE A HELPER BENDS THE SLIDE BED INO THE CHANNEL. MAKE SURE THE SLIDE BED IS COMPLETELY INSERTED INTO THE CHANNEL.

INSERT THE TWO CENTER SLIDE BRACES INTO THEIR RESPECTIVE LOCATIONS. SECURE THE SLIDE BED AND CENTER USING THE PROVIDED HARDWARE.

USING A 1/8" DRILL BIT, DRILL PILOT HOLES IN EACH INDENTATION ALONG EACH SIDE RAIL. THERE SHOULD BE 12 INDENTIONS ON EACH RAIL.

REPEAT THIS PROCESS FOR THE OPPOSITE SLIDE RAIL.

FAILURE TO INSERT SLIDE BED PROPERLY MAY RESULT IN INJURY OR AMPUTATION. EXPOSED SLIDE EDGES CAN BE SHARP AND BECOME A LACERATION HAZARD IF THE SLIDE IS NOT PROPERLY ASSEMBLED.

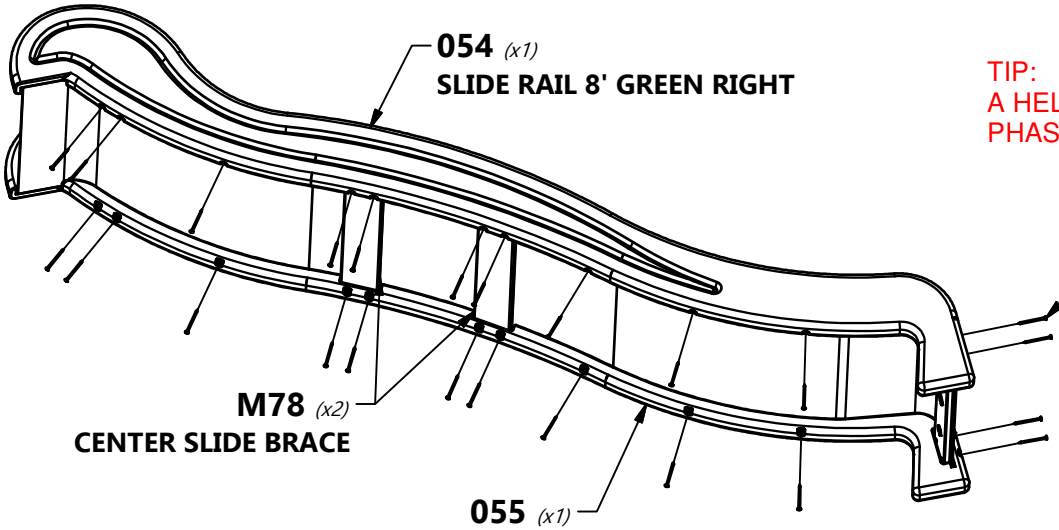

TIP:
A HELPER IS REQUIRED FOR THIS PHASE.

STEP 1 - FORT ASSEMBLY

QTY	PART NUMBER	DESCRIPTION
10	H100012	BOLT WH 5/16x2
8	H100013	BOLT WH 5/16x2 1/4
18	H100030	WASHER LOCK EXT 8x19
18	H100074	T-NUT 5/16

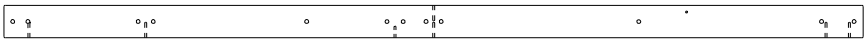

E4 (x1) | **FORT UPRIGHT - W4L16345**
1 3/8"x3 3/8"x89 1/2" (36x86x2274)

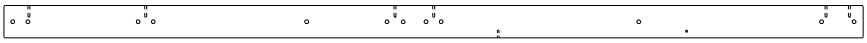

E6 (x1) | **FORT UPRIGHT - W4L16347**
1 3/8"x3 3/8"x89 1/2" (36x86x2274)

H15 (x1) | **FLOOR RAIL - W4L16349**
1"x3 3/8"x49 7/8" (24x86x1268)

M12 (x1) | **WALL RAIL - W104003**
5/8"x3 3/8"x37 1/2" (16x86x952)

M20 (x1) | **WALL RAIL - W103975**
5/8"x3 3/8"x49 1/4" (16x86x1252)

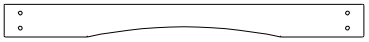

M10 (x1) | **ARCH WALL RAIL - W103987**
5/8"x3 3/8"x37 1/2" (16x86x952)

G1 (x1) | **GROUND BOARD - W103967**
1"x5 1/4"x37 1/2" (24x134x952)

TIP:
INSTALL T-NUTS IN WOOD FIRST

012 *(x10)*
BOLT - 2"

030 *(x18)*
WASHER - 8x19

074 *(x18)*
T-NUT - 5/16"

M20 *(x1)*

M10 *(x1)*

013 *(x4)*
BOLT - 2 1/4"

E4 *(x1)*

H15 *(x1)*

M12 *(x1)*

013 *(x4)*
BOLT - 2 1/4"

E6 *(x1)*

NOTE HOLE LOCATIONS

G1 *(x1)*

STEP 2 - FORT ASSEMBLY

QTY	PART NUMBER	DESCRIPTION
28	H100012	BOLT WH 5/16x2
28	H100030	WASHER LOCK EXT 8x19
32	H100074	T-NUT 5/16

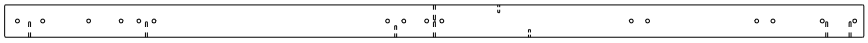

E3 (x1) | **FORT UPRIGHT - W4L16344**
1 3/8"x3 3/8"x89 1/2" (36x86x2274)

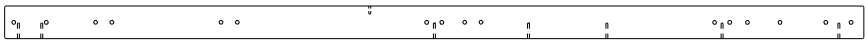

E5 (x1) | **FORT UPRIGHT - W4L16346**
1 3/8"x3 3/8"x89 1/2" (36x86x2274)

G4 (x1) | **GROUND BOARD - W4L16338**
1"x5 1/4"x81 1/2" (24x134x2070)

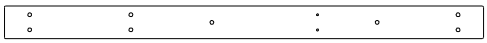

H15 (x1) | **FLOOR RAIL - W4L16349**
1"x3 3/8"x49 7/8" (24x86x1268)

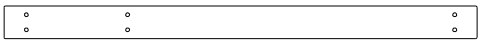

M20 (x1) | **WALL RAIL - W103975**
5/8"x3 3/8"x49 1/4" (16x86x1252)

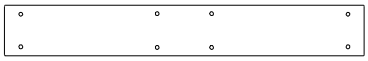

G2 (x1) | **SWING BEAM MOUNT - W103983**
1"x5 1/4"x37 1/2" (24x134x952)

K01 (x1) | **WALL RAIL - W4L16845**
5/8"x5 1/4"x37 1/2" (16x134x952)

M11 (x2) | **WALL RAIL - W4L16350**
5/8"x3 3/8"x37 1/2" (16x86x952)

TIP:
INSTALL T-NUTS IN WOOD FIRST

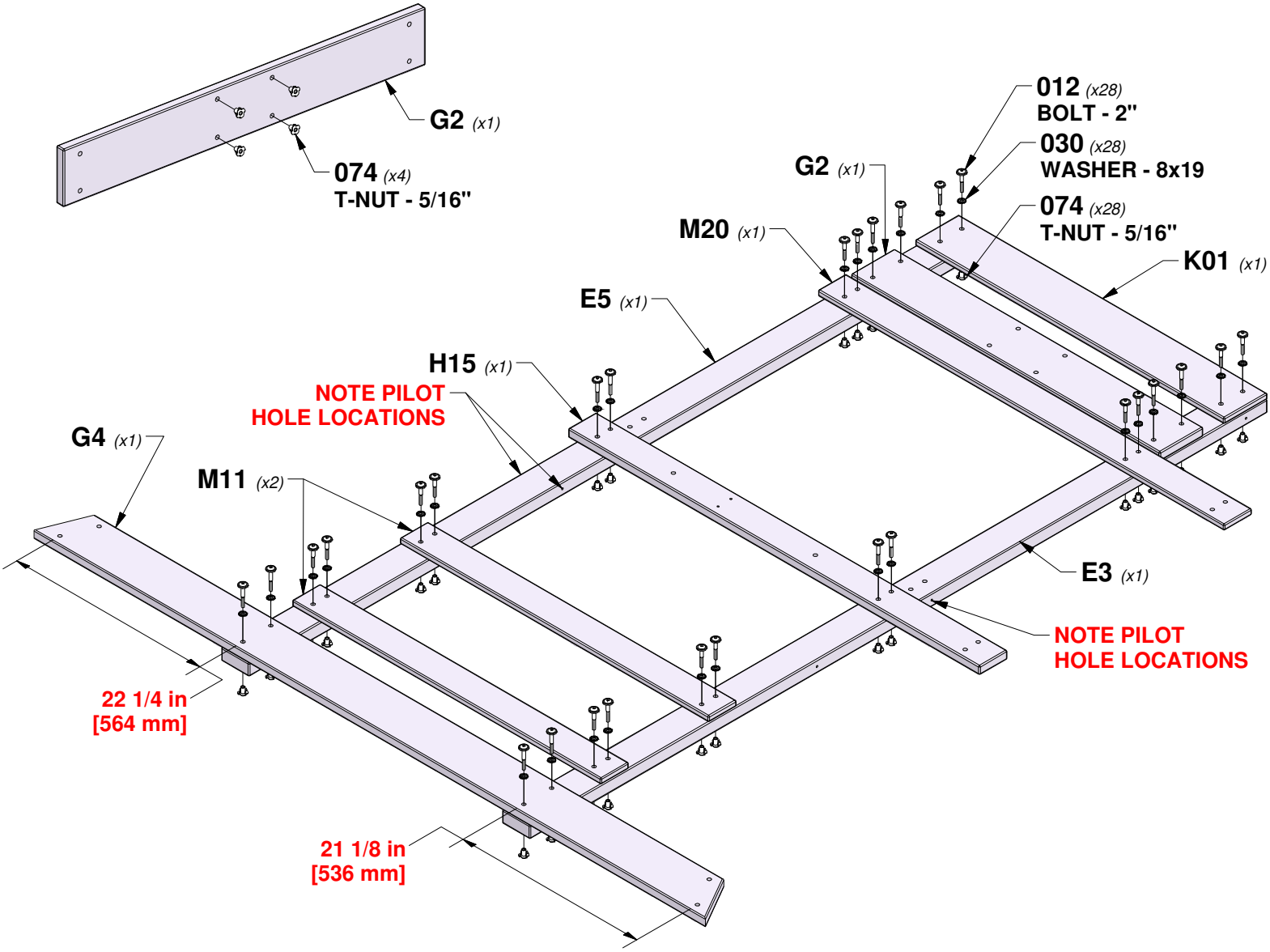

STEP 3 - FORT ASSEMBLY

QTY	PART NUMBER	DESCRIPTION
8	H100028	LAG SCREW WH 5/16x2 1/2
8	H100030	WASHER LOCK EXT 8x19

G3 *(x2)* | **GROUND BOARD - W103969**
1"x5 1/4"x63 1/2" (24x134x1612)

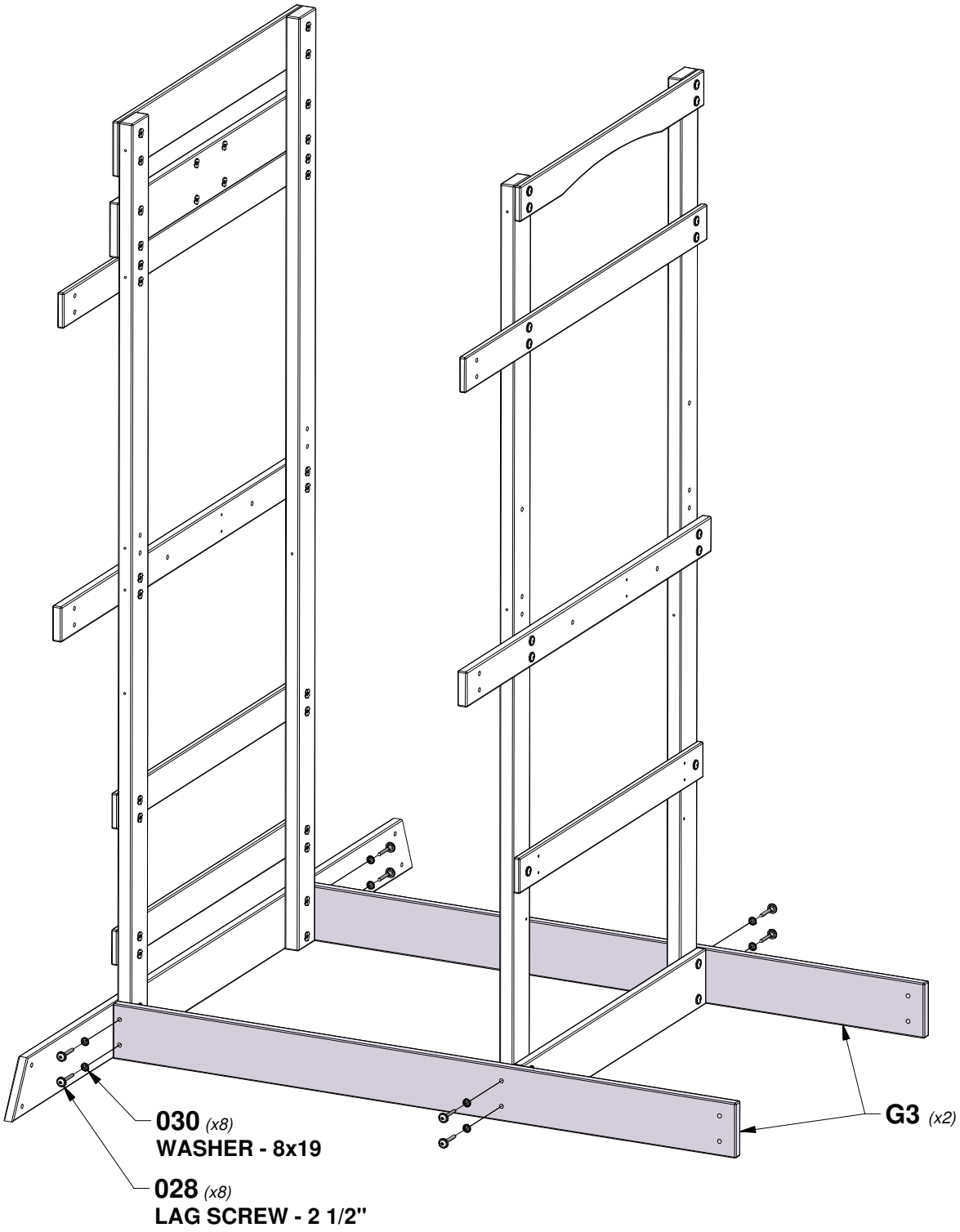

STEP 4 - FORT ASSEMBLY

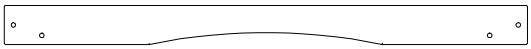

H12 (x1) | **ARCH BOARD - W103989**
1"x3 3/8"x45 3/8" (24x86x1154)

M13 (x1) | **WALL RAIL - W103973**
5/8"x3 3/8"x40 3/8" (16x86x1024)

QTY	PART NUMBER	DESCRIPTION
2	H100028	LAG SCREW WH 5/16x2 1/2
2	H100027	LAG SCREW WH 5/16x2
4	H100030	WASHER LOCK EXT 8x19

030 *(x4)*
WASHER - 8x19

028 *(x2)*
LAG SCREW - 2 1/2"

H12 *(x1)*

027 *(x2)*
LAG SCREW - 2"

M13 *(x1)*

STEP 5 - FORT ASSEMBLY

QTY	PART NUMBER	DESCRIPTION
4	H100111	SCREW PFH 8x2
2	H100128	SCREW PWH 8x5/8

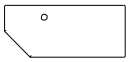

H1 *(x2)* | **SHELF SUPPORT - W104004**
1"x3 3/8"x7 7/8" (24x86x200)

A100314 *(x1)* | **"A" REVISION TAG**

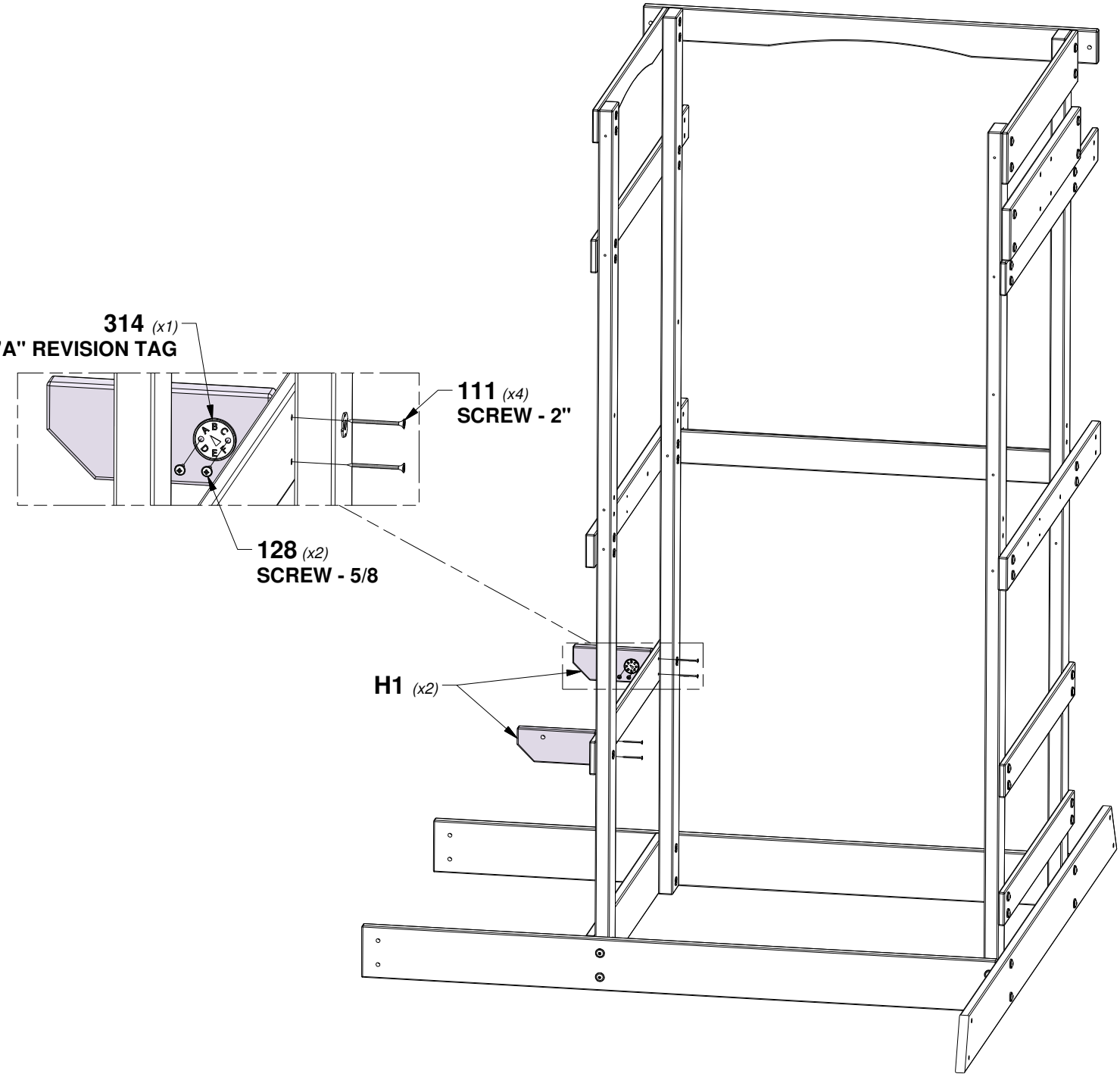

STEP 6 - FORT ASSEMBLY

QTY	PART NUMBER	DESCRIPTION
4	H100028	LAG SCREW WH 5/16x2 1/2
4	H100030	WASHER LOCK EXT 8x19

H13 *(x1)* | **DOUBLE ARCH BOARD - W103990**
1"x3 3/8"x45 3/8" (24x86x1154)

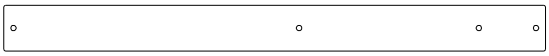

H8 *(x1)* | **FLOOR RAIL - W4L16341**
1"x3 3/8"x40 3/8" (24x86x1024)

H13 *(x1)*

030 *(x4)*
WASHER - 8x19

028 *(x4)*
LAG SCREW - 2 1/2"

H8 *(x1)*

STEP 7 - FORT ASSEMBLY

QTY	PART NUMBER	DESCRIPTION
44	H100088	SCREW PFH 8x1-1/8"

M17 *(x7)* | **WALL SLAT - W103999**
5/8"x3 3/8"x44 5/8" (16x86x1134)

M8 *(x4)* | **WALL SLAT - W104001**
5/8"x3 3/8"x25 5/8" (16x86x650)

M2 *(x4)* | **WALL SLAT - W104002**
5/8"x3 3/8"x9 1/2" (16x86x242)

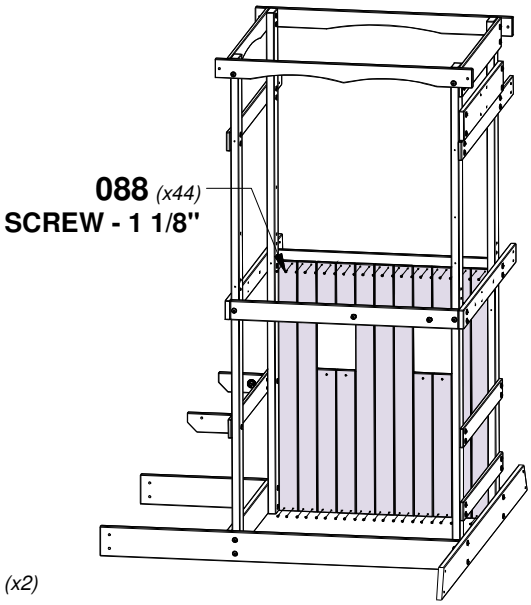

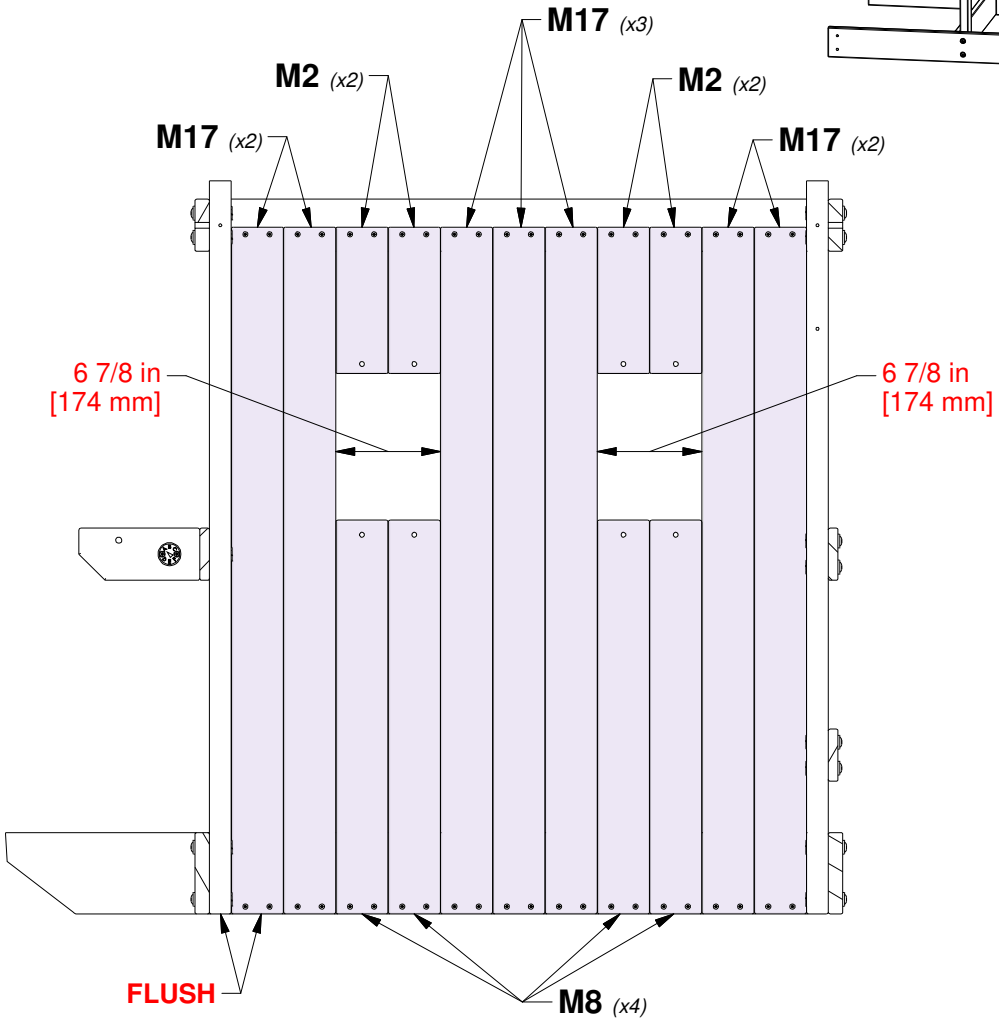

STEP 8 - FORT ASSEMBLY

QTY	PART NUMBER	DESCRIPTION
8	H100180	SCREW PWH 8x1-1/4

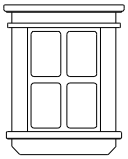

A100320 *(x2)* | **PLASTIC WINDOW 44x266x329**

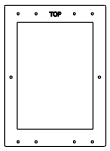

A100364 *(x2)* | **SMALL PLASTIC WINDOW INSIDE TRIM**

364 *(x2)*
SMALL PLASTIC WINDOW INSIDE TRIM

180 *(x8)*
SCREW - 1-1/4

320 *(x2)*
PLASTIC WINDOW

STEP 9 - FORT ASSEMBLY

QTY	PART NUMBER	DESCRIPTION
2	H100027	LAG SCREW WH 5/16x2
2	H100030	WASHER LOCK EXT 8x19

H11 *(x1)* | **FLOOR SUPPORT - W4L16355**
1"x3 3/8"x40 3/8" (24x86x1024)

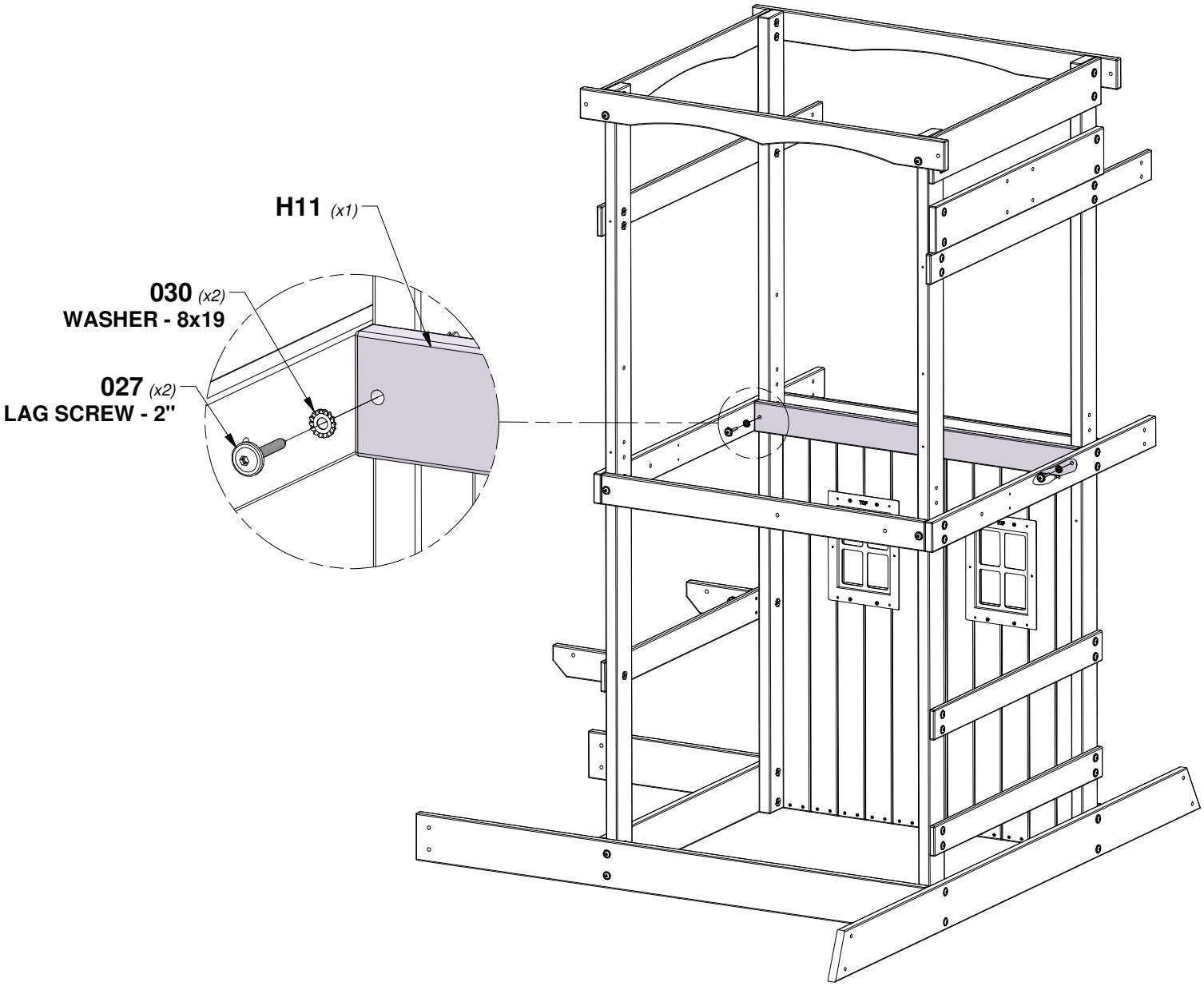

STEP 10 - FORT ASSEMBLY

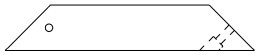

F71 (x4) | **STANDARD ANGLE BRACE - W4L16342**
1 3/8"x2 3/8"x13" (36x60x330)

QTY	PART NUMBER	DESCRIPTION
4	H100013	BOLT WH 5/16x2 1/4
4	H100030	WASHER LOCK EXT 8x19
4	H100074	T-NUT 5/16
4	H100138	WASHER LOCK EXT 6x15
4	H100649	LAG SCREW WH 1/4x2-1/2

TIP:
INSTALL T-NUTS IN WOOD FIRST

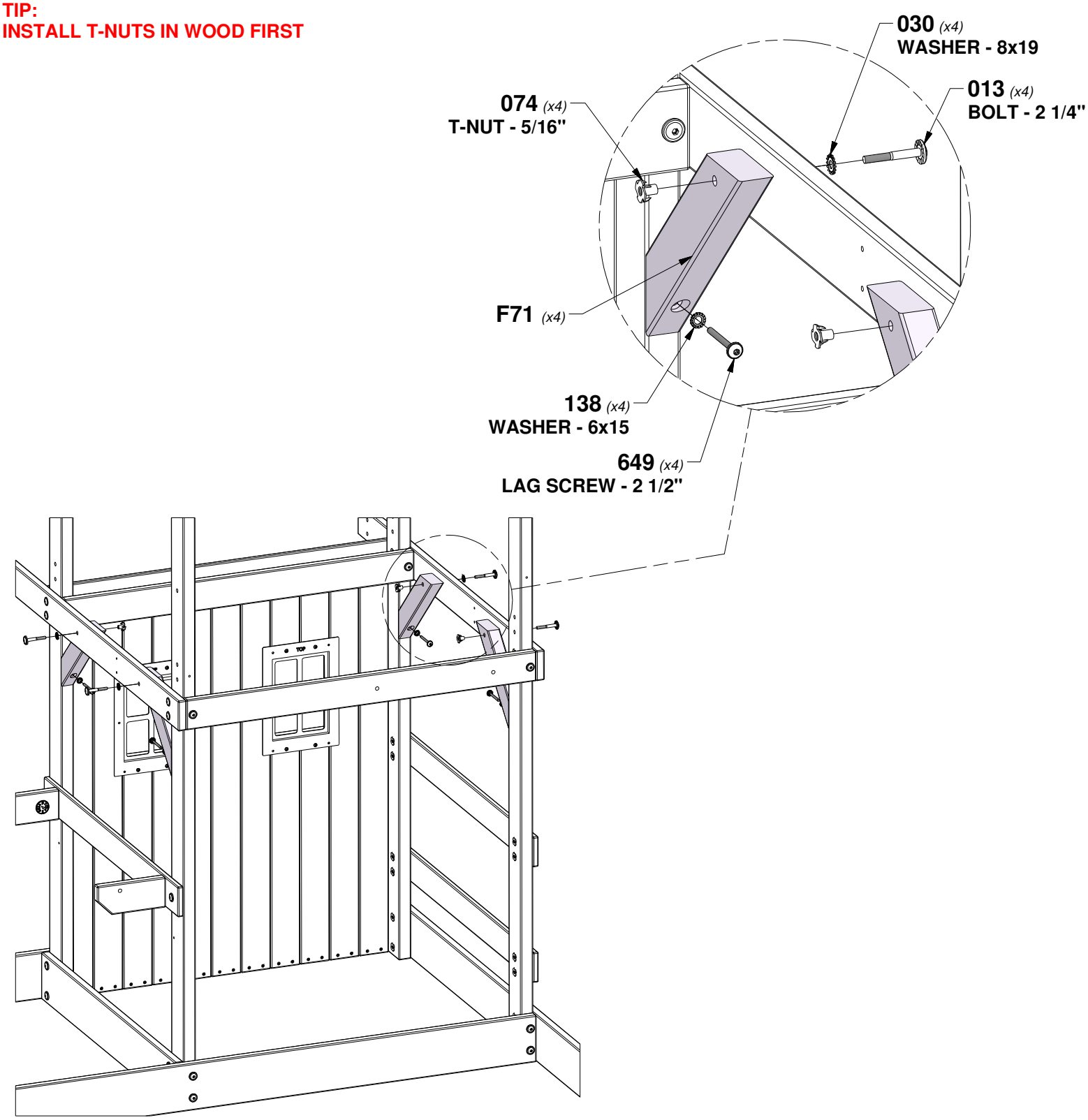

STEP 11 - FORT ASSEMBLY

QTY	PART NUMBER	DESCRIPTION
4	H100090	SCREW PFH 8x2 1/2

H10 *(x1)* | **FLOOR SUPPORT - W103980**
1"x3 3/8"x40 3/8" (24x86x1024)

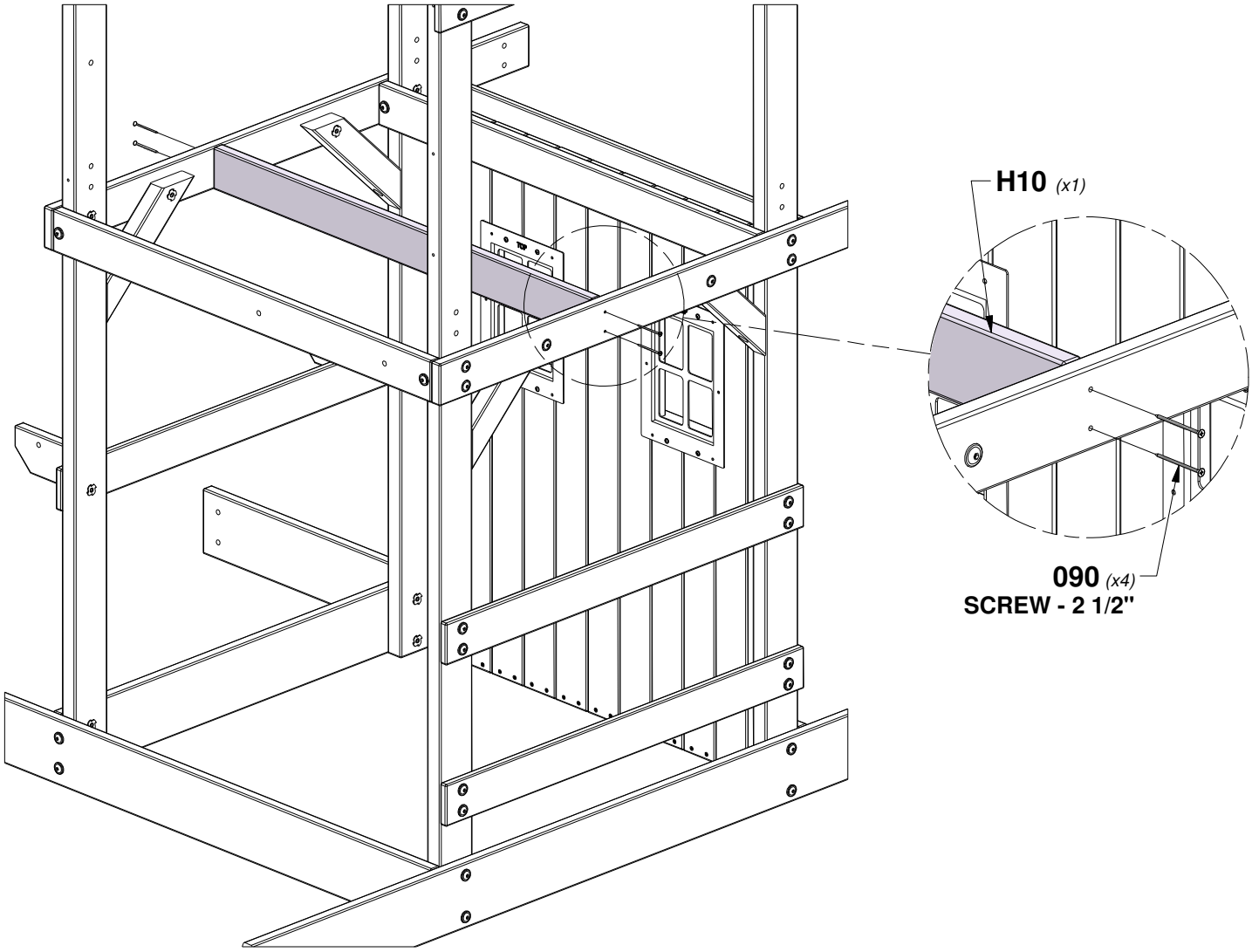

STEP 12 - FORT ASSEMBLY

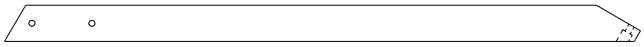

F3 (x1) | **STANDARD ANGLE BRACE - W4L16343**
1 3/8"x2 3/8"x41 3/8" (36x60x1052)

QTY	PART NUMBER	DESCRIPTION
2	H100013	BOLT WH 5/16x2 1/4
2	H100030	WASHER LOCK EXT 8x19
2	H100074	T-NUT 5/16
1	H100138	WASHER LOCK EXT 6x15
1	H100649	LAG SCREW WH 1/4x2-1/2

TIP:
INSTALL T-NUTS IN WOOD FIRST

138 *(x1)*
WASHER - 6x15

649 *(x1)*
LAG SCREW - 2 1/2"

F3 *(x1)*

074 *(x2)*
T-NUT - 5/16"

030 *(x2)*
WASHER - 8x19

013 *(x2)*
BOLT - 2 1/4"

STEP 13 - FORT ASSEMBLY

QTY	PART NUMBER	DESCRIPTION
20	H100088	SCREW PFH 8x1-1/8"

M4 *(x5)* | **WALL SLAT - W103995**
5/8"x3 3/8"x12 7/8" (16x86x326)

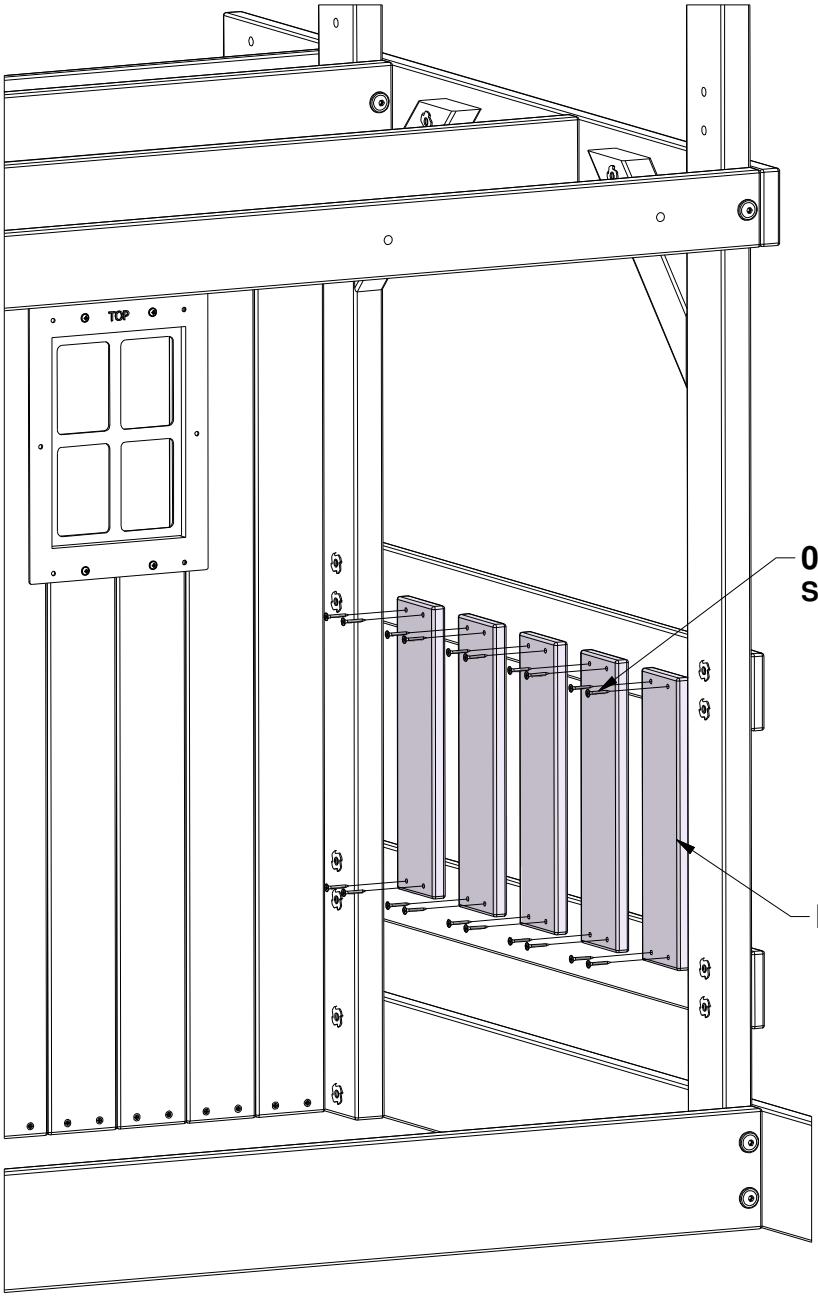

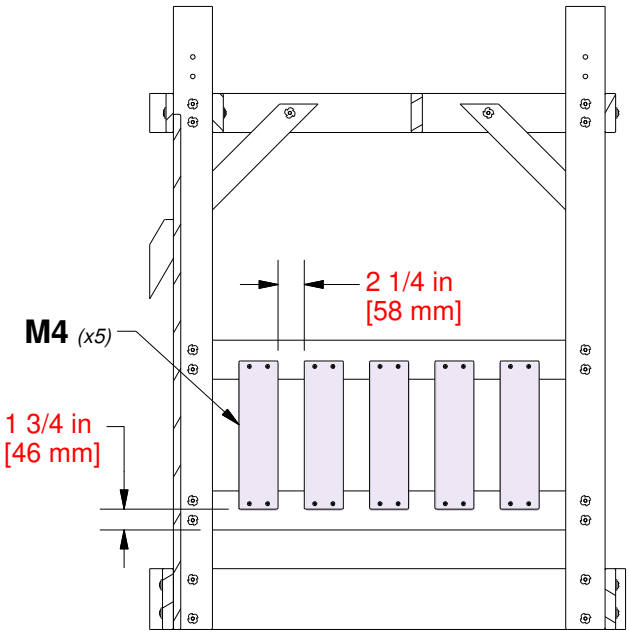

USE PICKET PAL FOR PICKET SPACING

STEP 14 - FORT ASSEMBLY

QTY	PART NUMBER	DESCRIPTION
36	H100088	SCREW PFH 8x1-1/8"

M6 *(x9)* | **WALL SLAT - W104009**
5/8"x3 3/8"x23 1/4" (16x86x590)

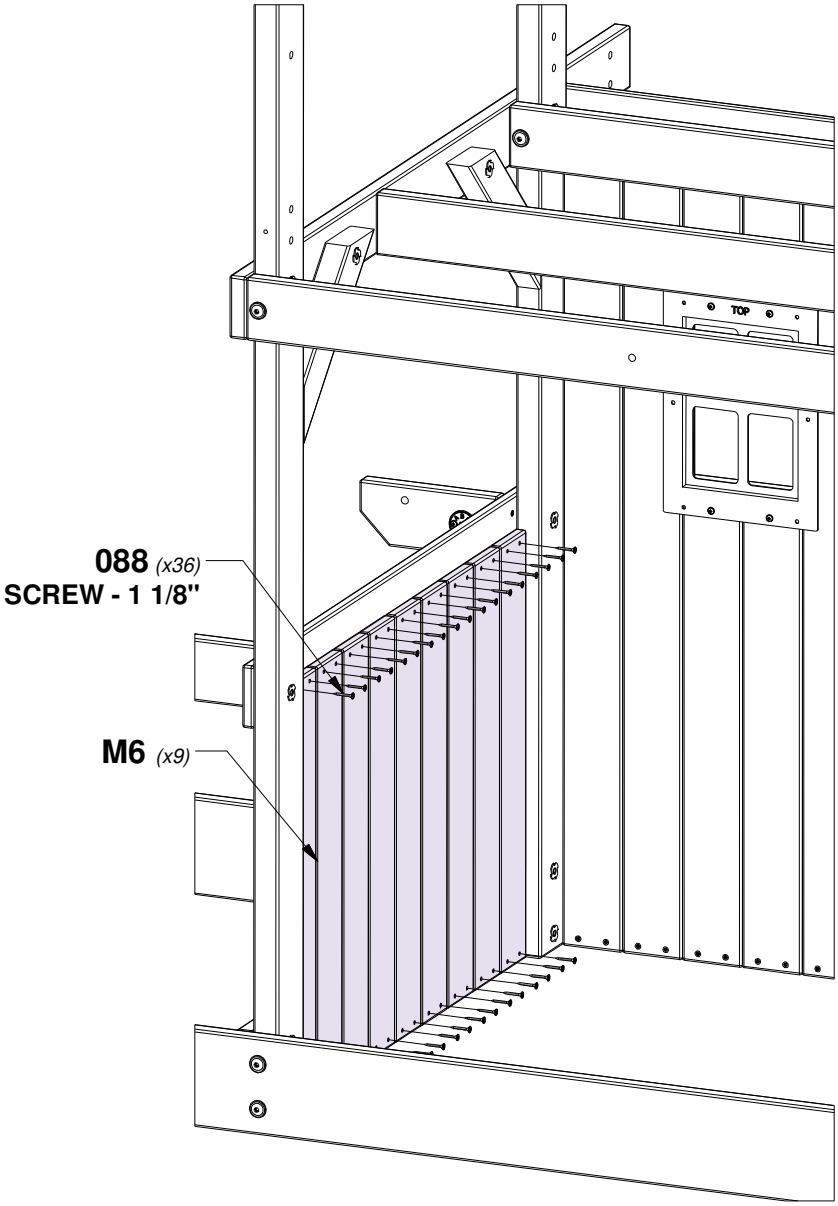

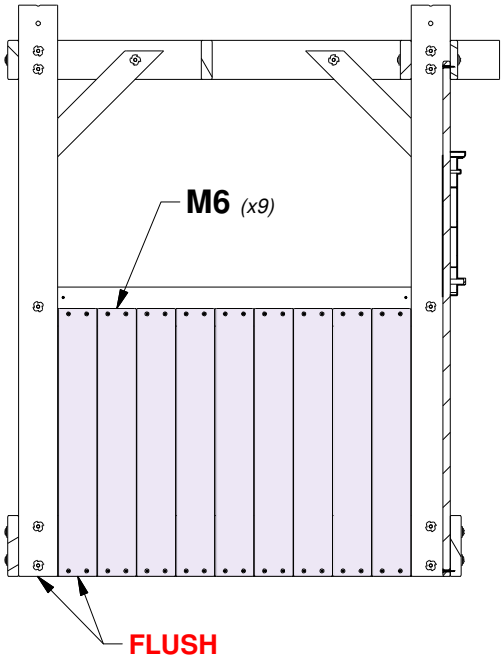

STEP 15 - FORT ASSEMBLY

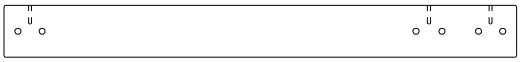

E1 (x2) | **PORCH UPRIGHT - W4L16356**
1 3/8"x3 3/8"x33 3/8" (36x86x848)

QTY	PART NUMBER	DESCRIPTION
4	H100012	BOLT WH 5/16x2
4	H100013	BOLT WH 5/16x2 1/4
8	H100030	WASHER LOCK EXT 8x19
8	H100074	T-NUT 5/16

TIP:
INSTALL T-NUTS IN WOOD FIRST

074 *(x8)*
T-NUT - 5/16"

030 *(x8)*
WASHER - 8x19

012 *(x4)*
BOLT - 2"

E1 *(x2)*

NOTE PILOT HOLE LOCATIONS

013 *(x4)*
BOLT - 2 1/4"

STEP 16 - FORT ASSEMBLY

QTY	PART NUMBER	DESCRIPTION
4	H100028	LAG SCREW WH 5/16x2 1/2
4	H100030	WASHER LOCK EXT 8x19

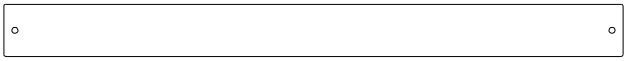

H9 (x1) | **FLOOR RAIL - W103972**
1"x3 3/8"x40 3/8" (24x86x1024)

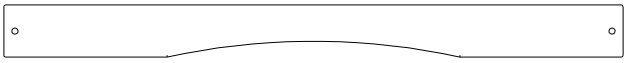

M14 (x1) | **ARCH WALL RAIL - W103978**
5/8"x3 3/8"x40 3/8" (16x86x1024)

030 *(x4)*
WASHER - 8x19

028 *(x4)*
LAG SCREW - 2 1/2"

M14 *(x1)*

H9 *(x1)*

STEP 17 - FORT ASSEMBLY

QTY	PART NUMBER	DESCRIPTION
66	H100086	SCREW PFH 8x1-1/2"

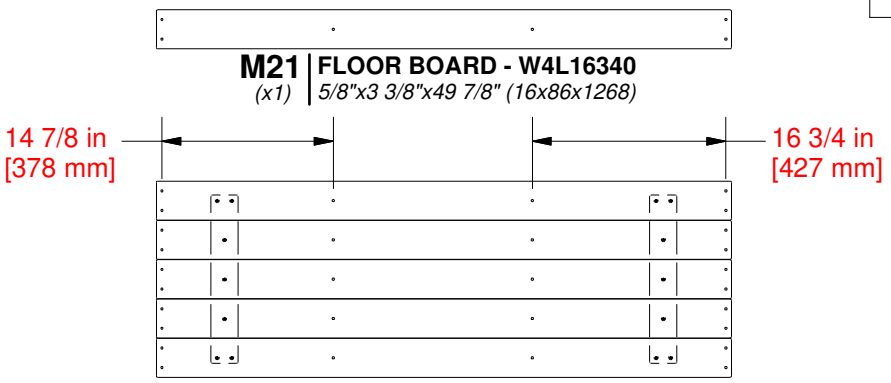

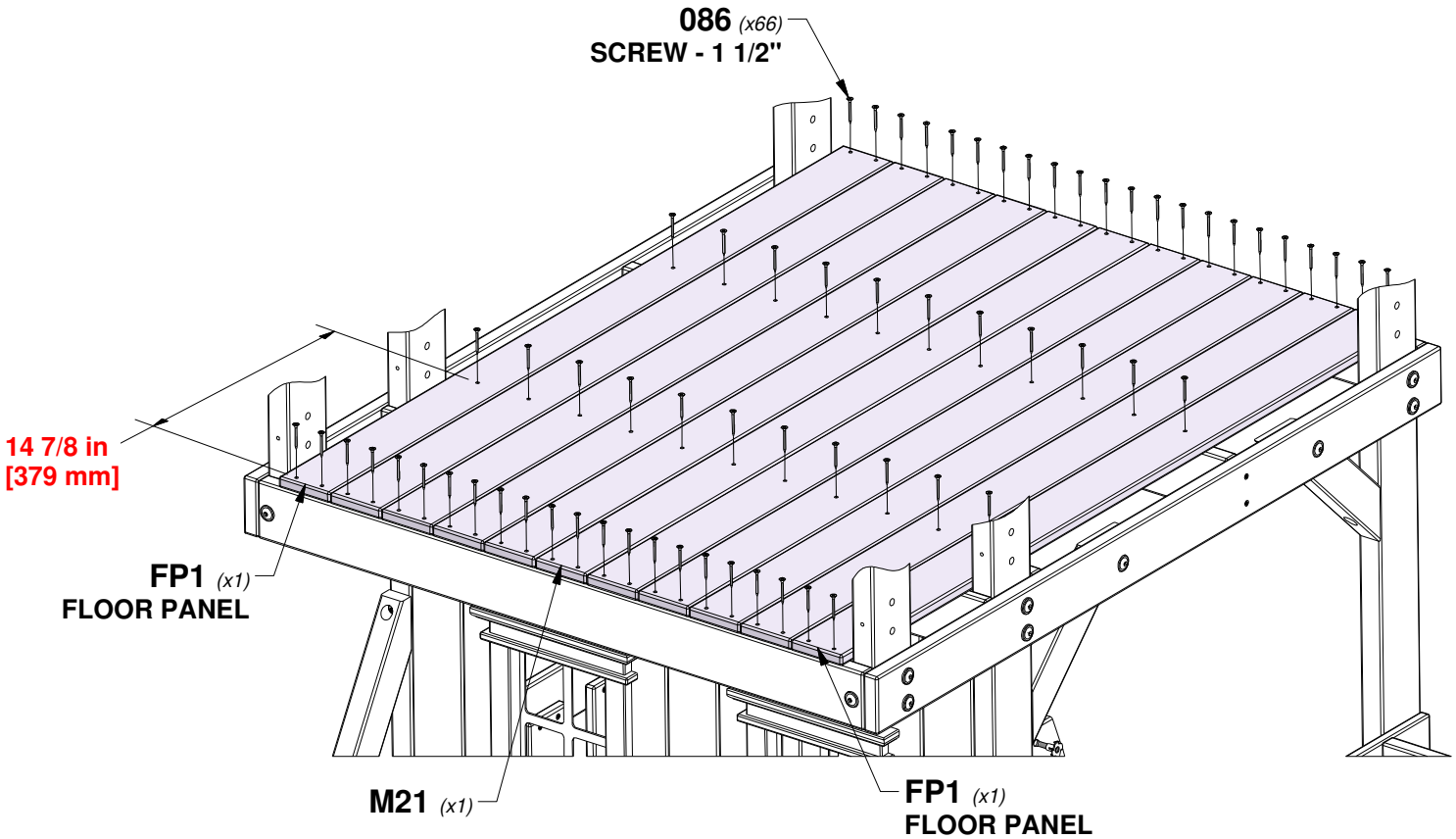

STEP 18 - FORT ASSEMBLY

QTY	PART NUMBER	DESCRIPTION
10	H100086	SCREW PFH 8x1-1/2"

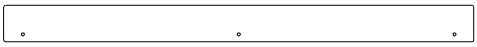

N3 (x2) | **OUTER FLOOR BOARD - W103991**
5/8"x2 3/8"x30 5/8" (16x60x778)

N1 (x2) | **OUTER FLOOR BOARD - W103992**
5/8"x2 3/8"x7 1/8" (16x60x180)

086 *(x10)*
SCREW - 1 1/2"

N1 *(x1)*

N3 *(x1)*

N1 *(x1)*

N3 *(x1)*

STEP 19 - FORT ASSEMBLY

QTY	PART NUMBER	DESCRIPTION
2	H100011	BOLT WH 5/16x1 3/4
2	H100013	BOLT WH 5/16x2 1/4
4	H100030	WASHER LOCK EXT 8x19
4	H100074	T-NUT 5/16

TIP:
INSTALL T-NUTS IN WOOD FIRST

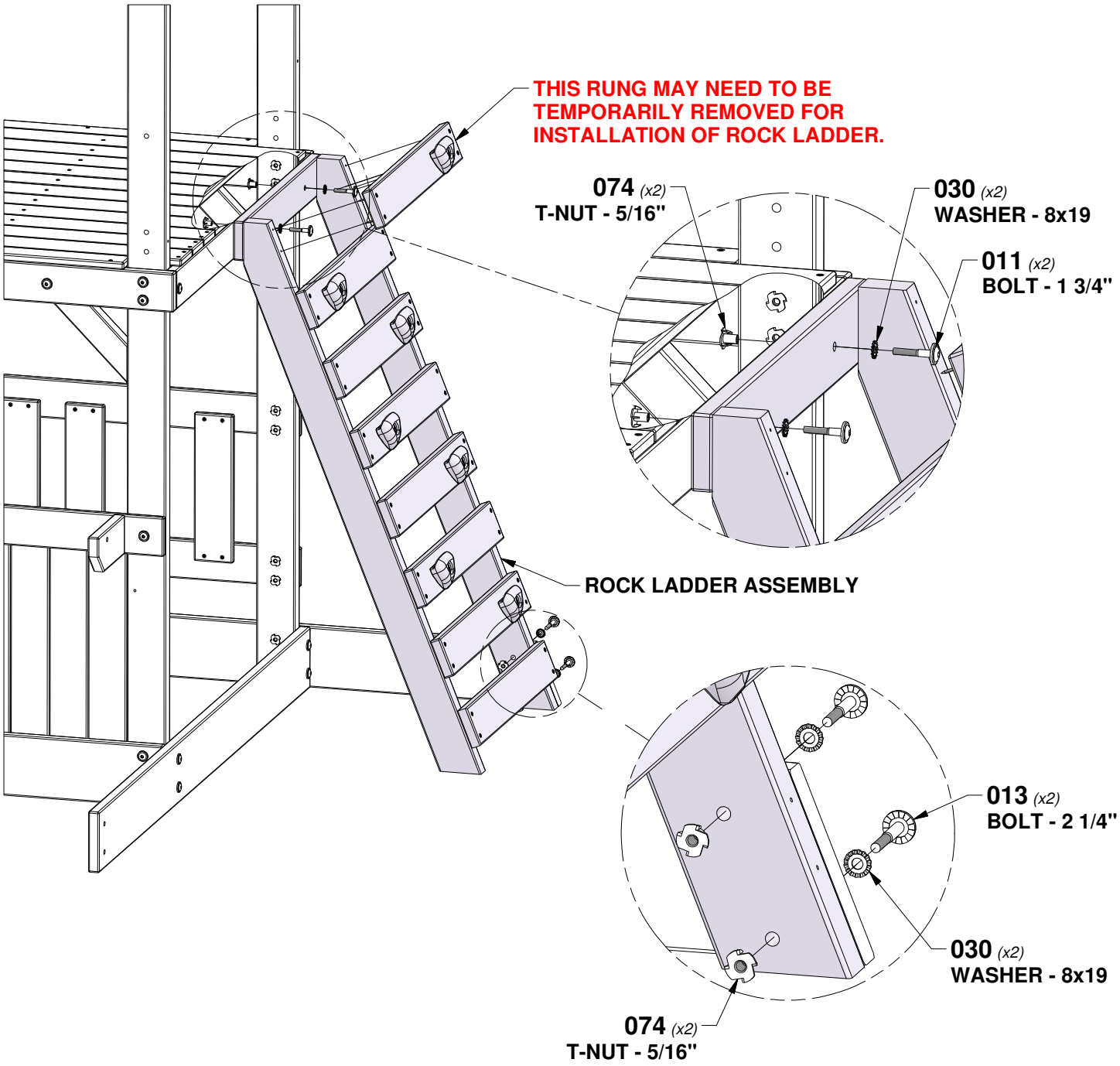

STEP 20 - FORT ASSEMBLY

QTY	PART NUMBER	DESCRIPTION
4	H100027	LAG SCREW WH 5/16x2
4	H100030	WASHER LOCK EXT 8x19

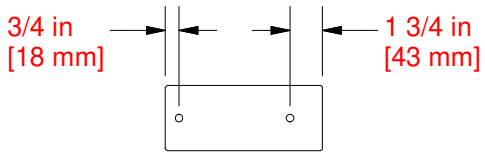

M19 (x2) | **SHORT WALL RAIL - W4L16352**
5/8"x3 3/8"x8 1/4" (16x86x208)

M1 (x2) | **SHORT WALL RAIL - W103982**
5/8"x3 3/8"x8 1/4" (16x86x208)

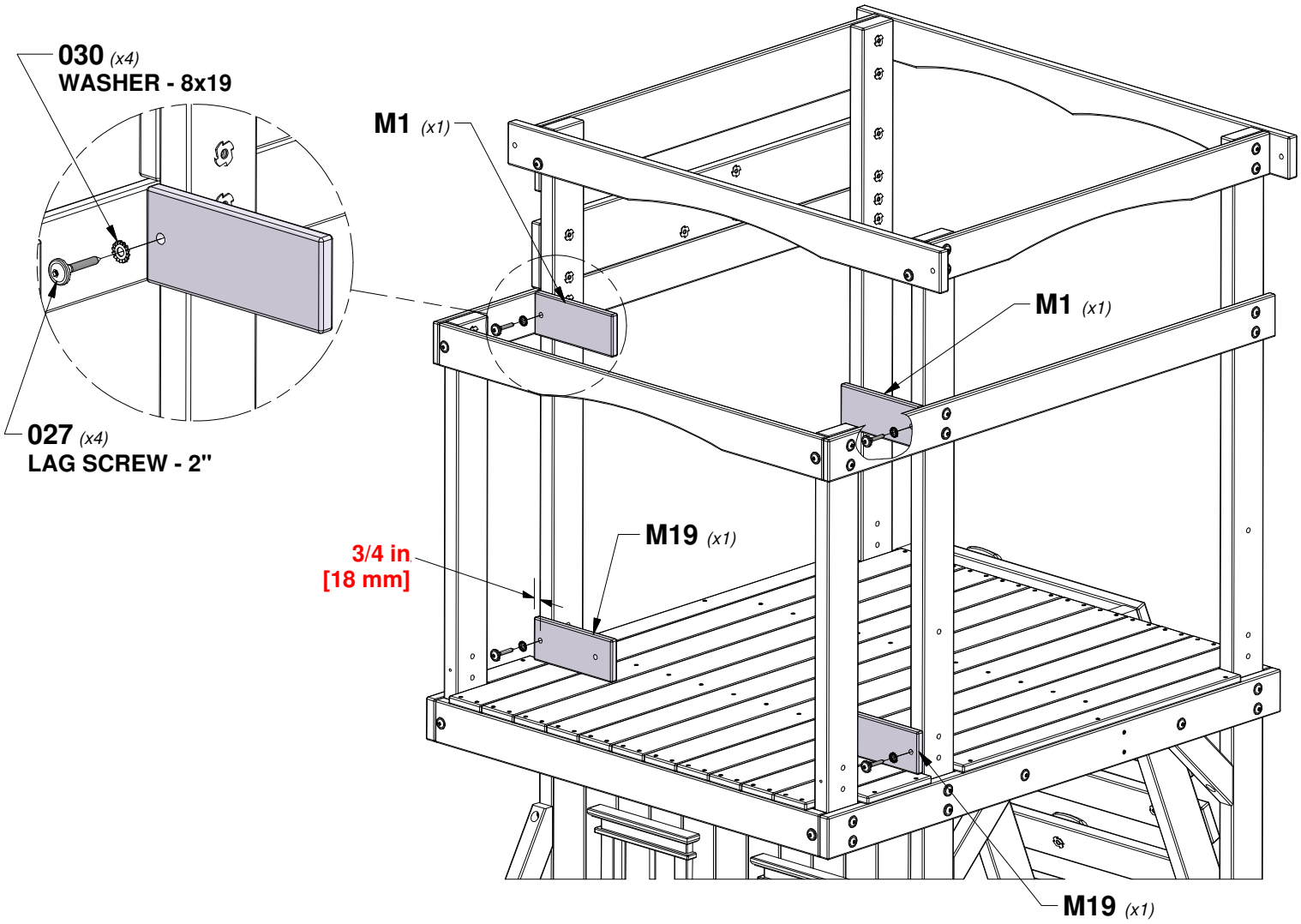

STEP 21 - FORT ASSEMBLY

QTY	PART NUMBER	DESCRIPTION
20	H100088	SCREW PFH 8x1-1/8"

M24 *(x2)* | **WALL SLAT - W4L16351**
5/8"x3 3/8"x40 5/8" (16x86x1032)

M16 *(x2)* | **WALL SLAT - W103998**
5/8"x3 3/8"x40 5/8" (16x86x1032)

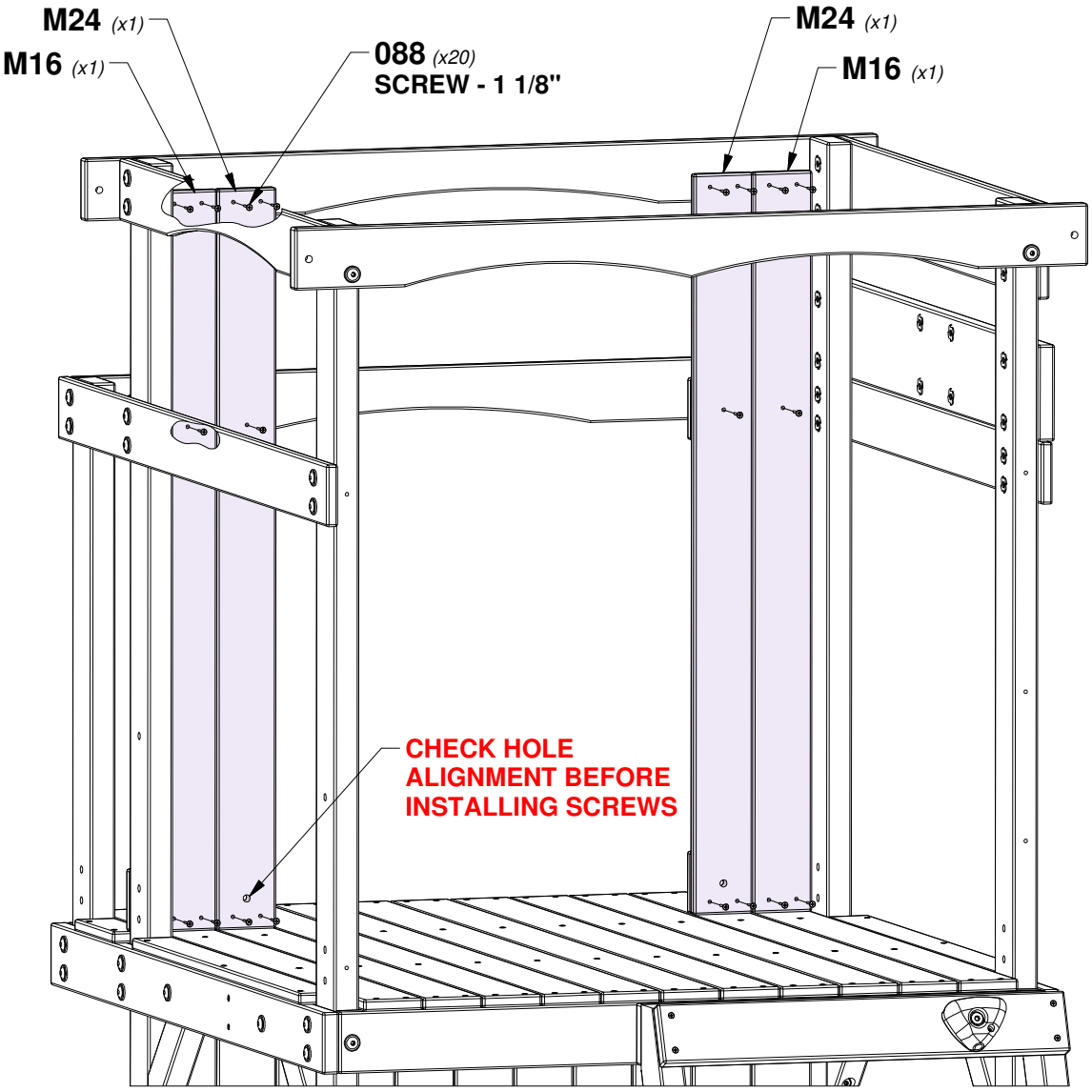

STEP 22 - FORT ASSEMBLY

QTY	PART NUMBER	DESCRIPTION
2	H100009	BOLT WH 5/16x1 1/4
4	H100074	T-NUT 5/16
2	H100222	BOLT WH 5/16x3/4

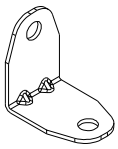

A4M01046 *(x2)* | **L BRACKET 2.5x38x55x55**

TIP:
INSTALL T-NUTS IN WOOD FIRST

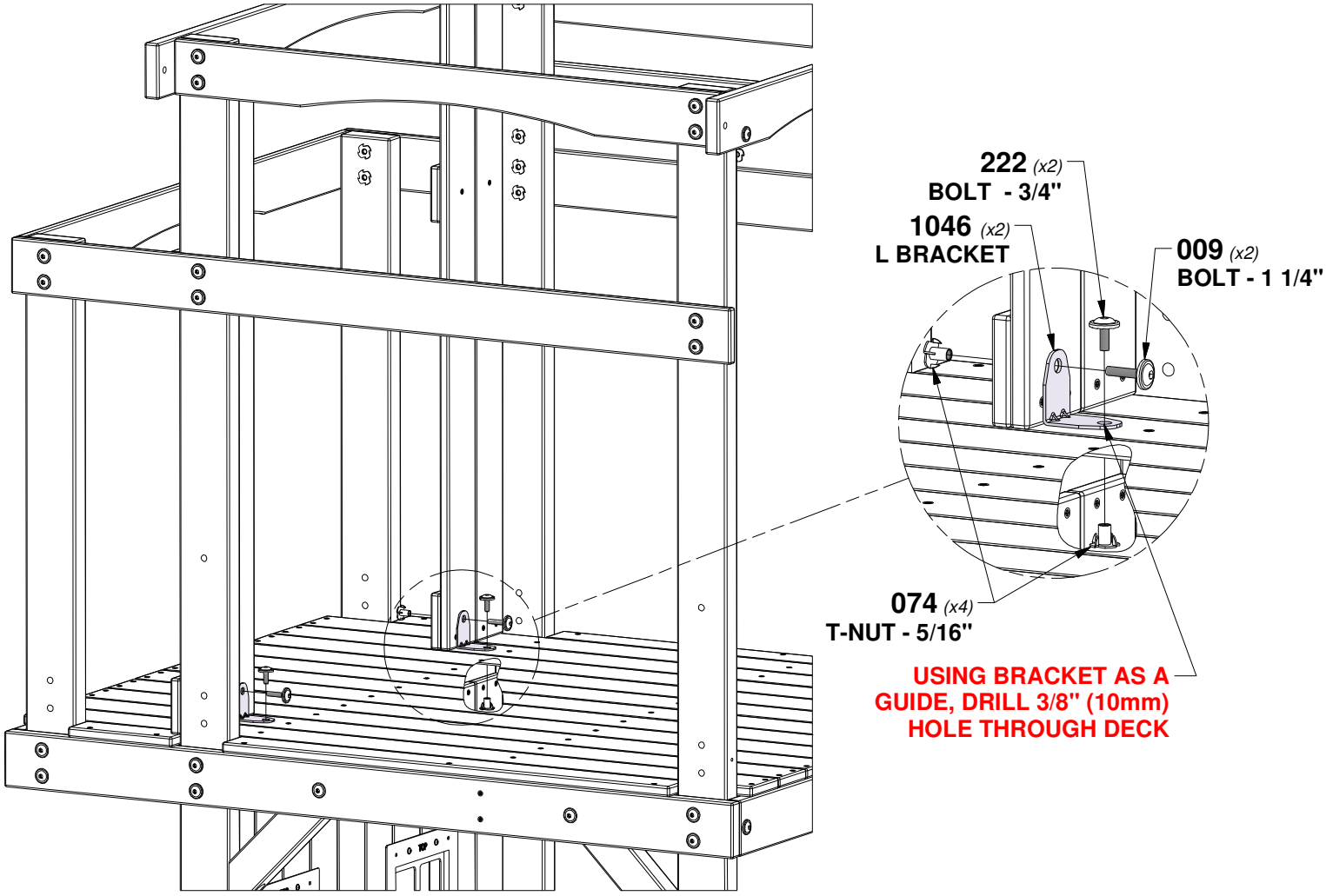

STEP 23 - FORT ASSEMBLY

QTY	PART NUMBER	DESCRIPTION
2	H100027	LAG SCREW WH 5/16x2
2	H100030	WASHER LOCK EXT 8x19

M3 *(x2)* | **SHORT WALL RAIL - W4L16354**
5/8"x3 3/8"x10" (16x86x254)

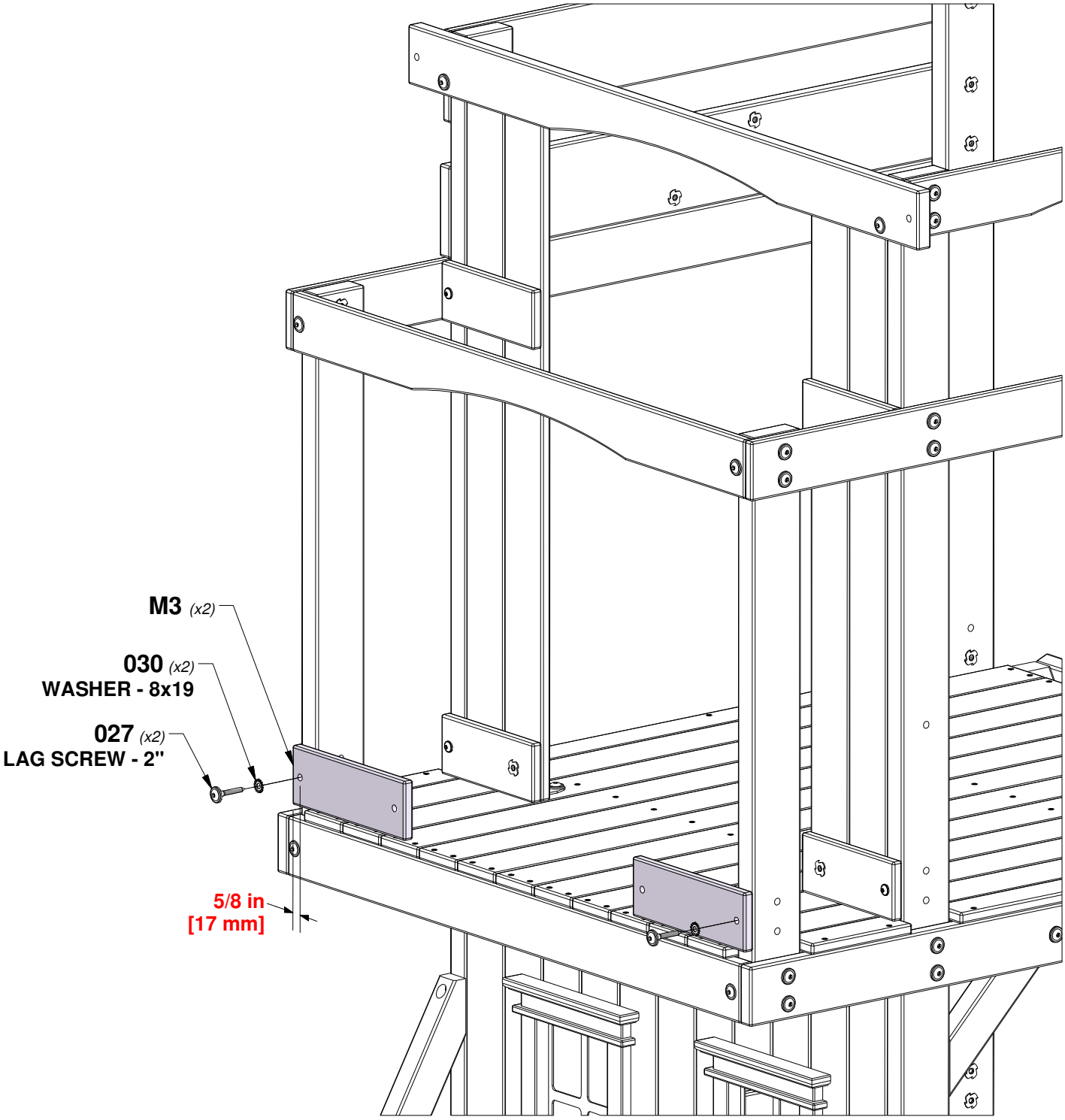

STEP 24 - FORT ASSEMBLY

M18 *(x1)* | **WALL RAIL - W4L16348**
5/8"x3 3/8"x48 5/8" (16x86x1236)

QTY	PART NUMBER	DESCRIPTION
6	H100012	BOLT WH 5/16x2
6	H100030	WASHER LOCK EXT 8x19
6	H100074	T-NUT 5/16

TIP:
INSTALL T-NUTS IN WOOD FIRST

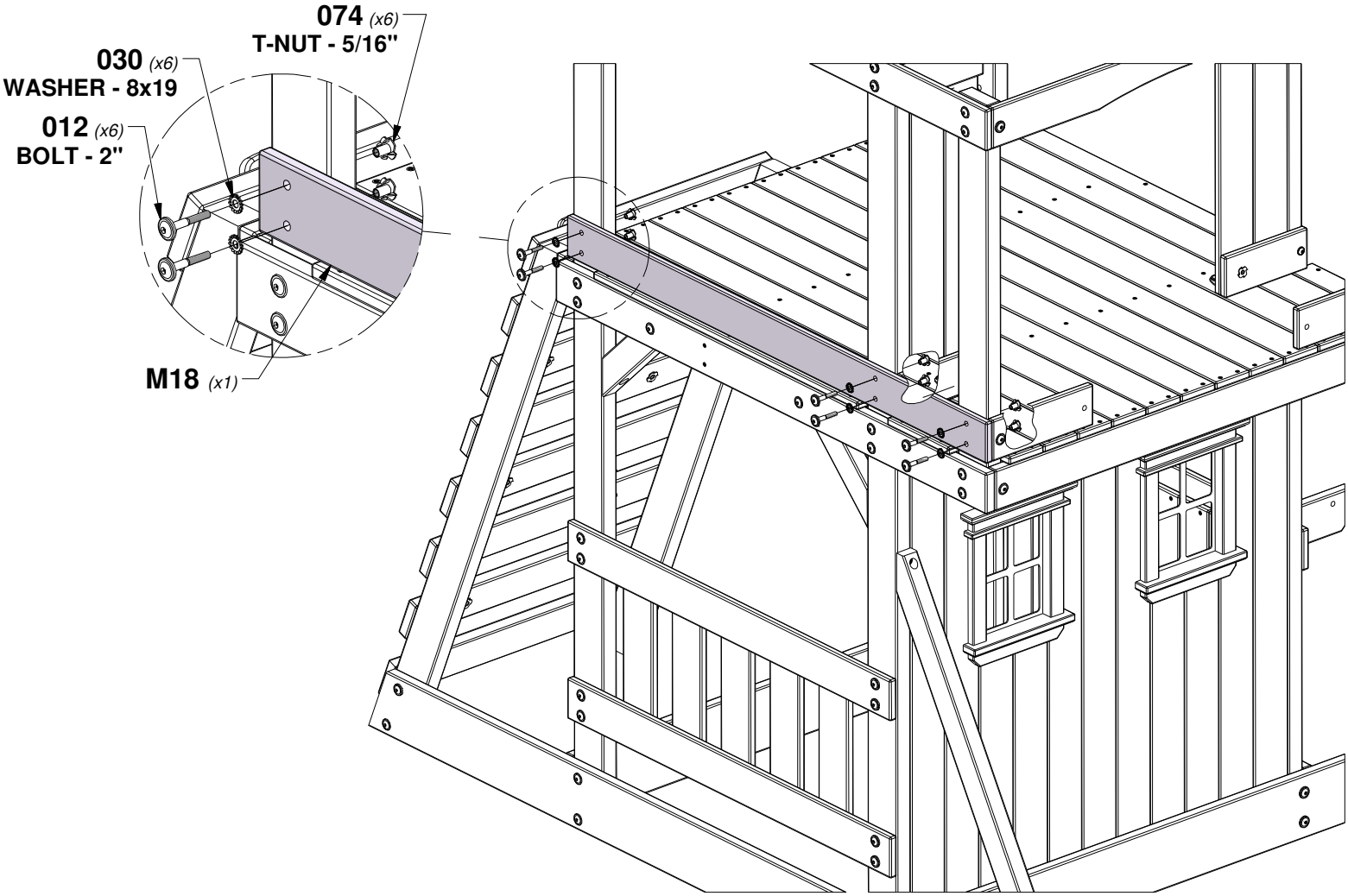

STEP 25 - FORT ASSEMBLY

QTY	PART NUMBER	DESCRIPTION
6	H100012	BOLT WH 5/16x2
6	H100030	WASHER LOCK EXT 8x19
6	H100074	T-NUT 5/16

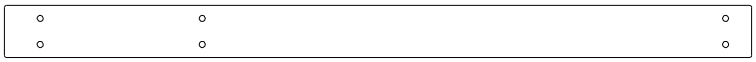

M18 *(x1)* | **WALL RAIL - W4L16348**
5/8"x3 3/8"x48 5/8" (16x86x1236)

TIP:
INSTALL T-NUTS IN WOOD FIRST

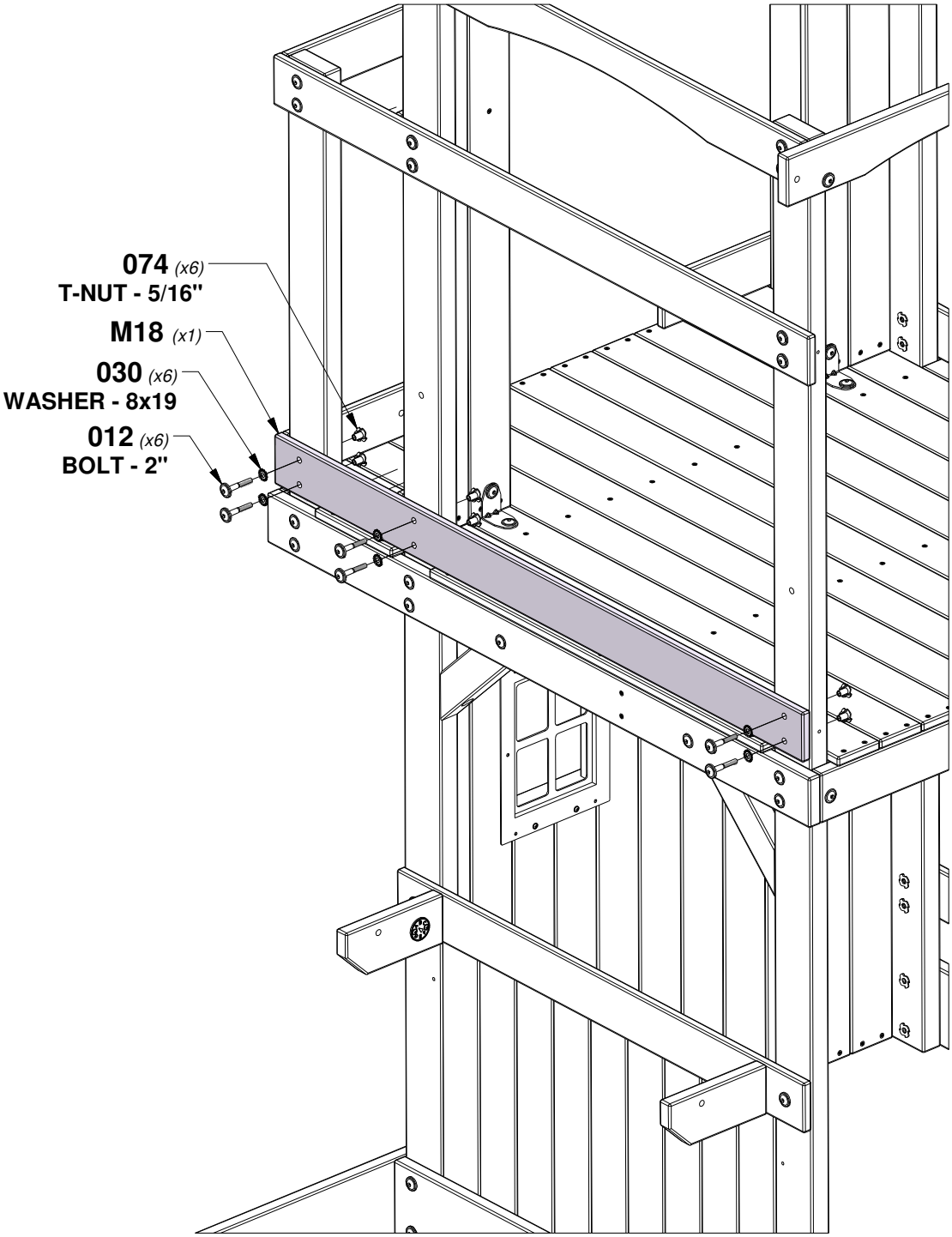

STEP 26 - FORT ASSEMBLY

QTY	PART NUMBER	DESCRIPTION
8	H100088	SCREW PFH 8x1-1/8"

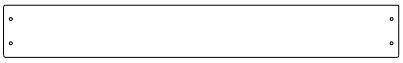

M7 *(x2)* | **WALL SLAT - W103997**
5/8"x3 3/8"x25 3/4" (16x86x654)

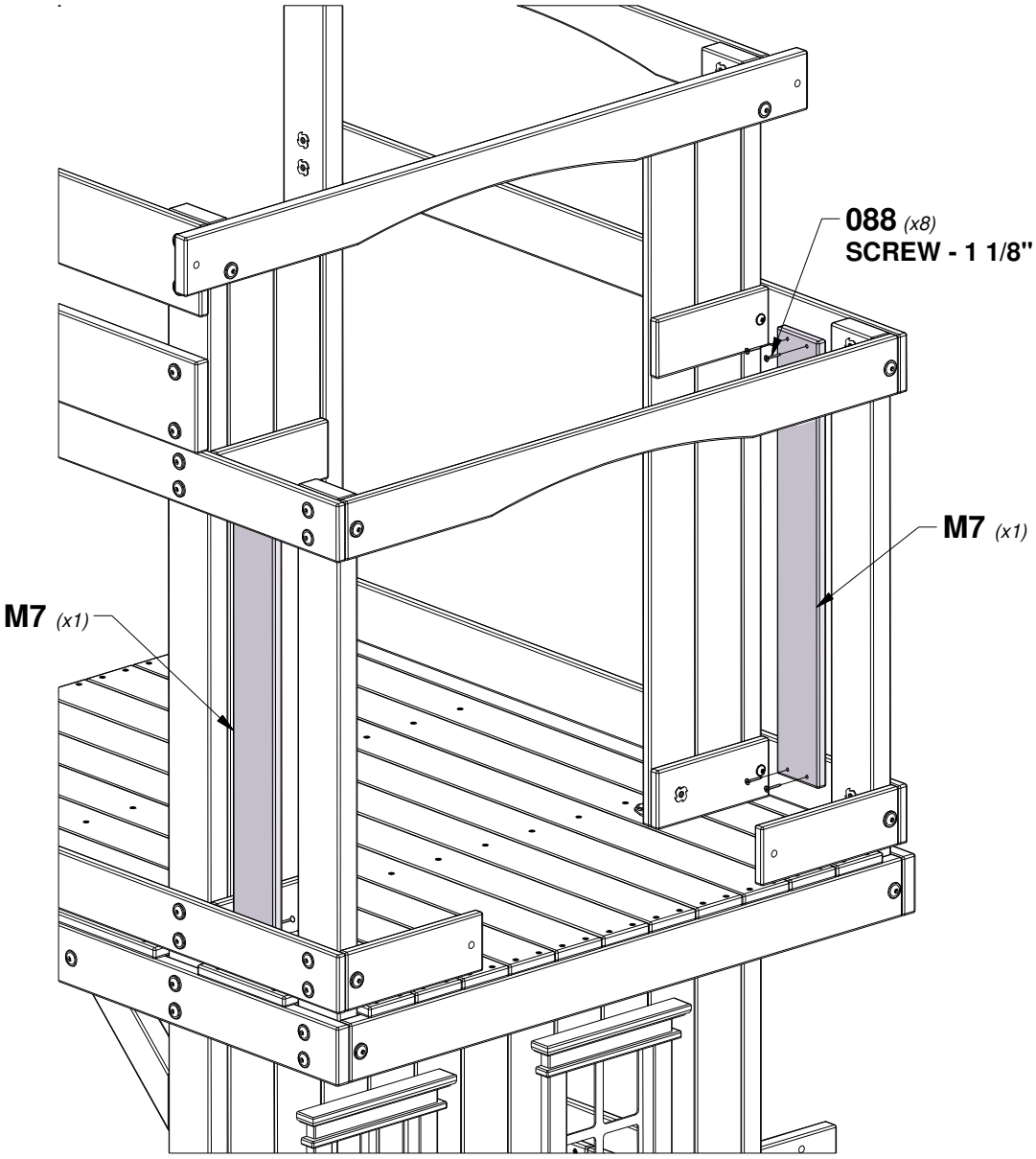

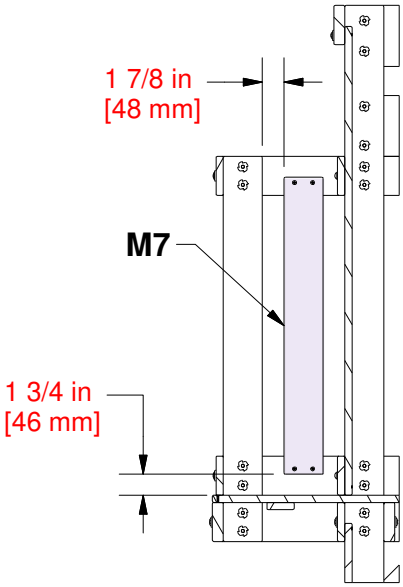

USE PICKET PAL FOR PICKET SPACING

STEP 27 - FORT ASSEMBLY

QTY	PART NUMBER	DESCRIPTION
16	H100088	SCREW PFH 8x1-1/8"

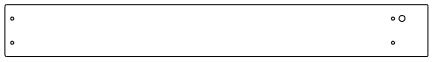

M23 *(x2)* | **WALL SLAT - W4L16353**
5/8"x3 3/8"x27 1/2" (16x86x700)

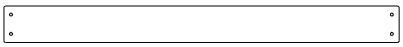

N2 *(x2)* | **WALL SLAT - W103996**
5/8"x2 3/8"x25 3/4" (16x60x654)

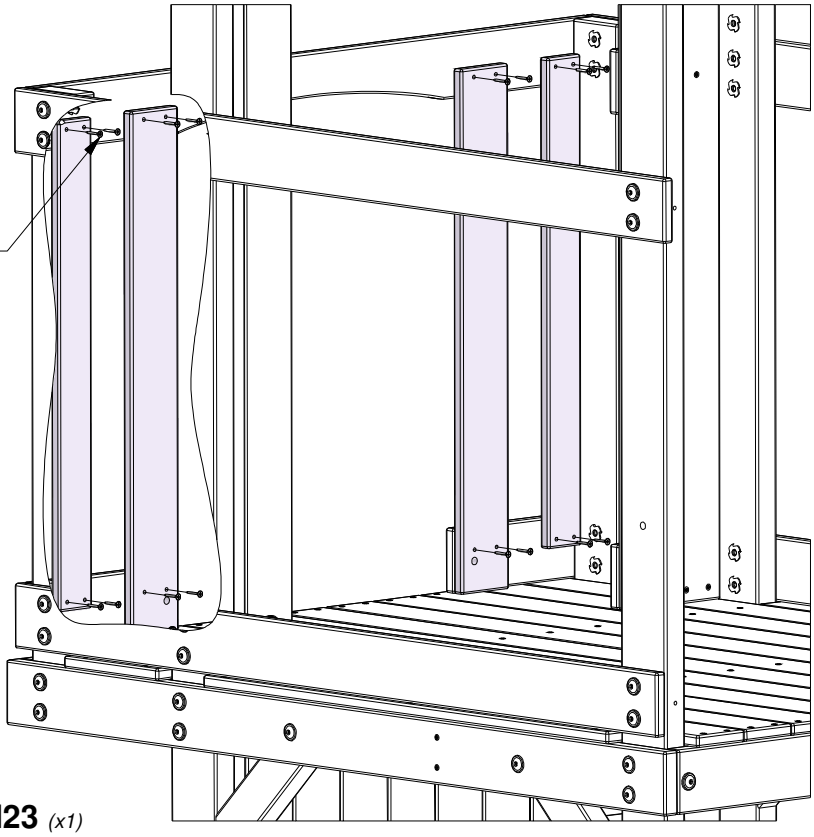

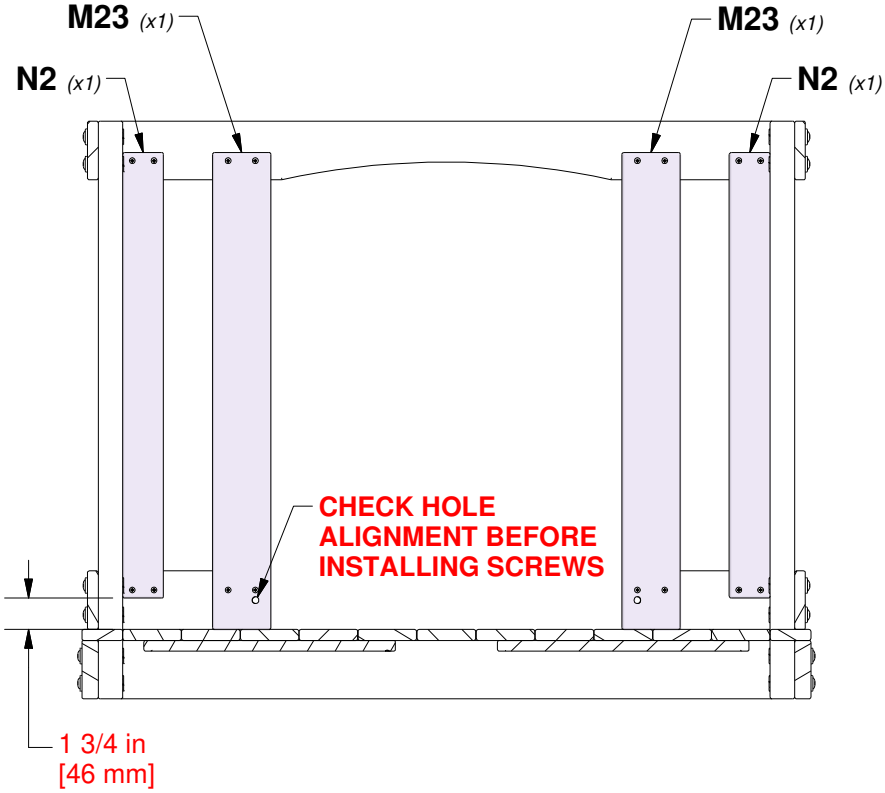

STEP 28 - FORT ASSEMBLY

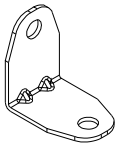

A4M01046 *(x2)* | **L BRACKET 2.5x38x55x55**

QTY	PART NUMBER	DESCRIPTION
2	H100005	NUT BARREL WH 5/16x7/8
2	H100008	BOLT WH 5/16x1
2	H100031	WASHER LOCK EXT 12x19
2	H100074	T-NUT 5/16
2	H100222	BOLT WH 5/16x3/4

TIP:
INSTALL T-NUTS IN WOOD FIRST

005 *(x2)*
NUT BARREL - 7/8"

031 *(x2)*
WASHER - 12x19

222 *(x2)*
BOLT - 3/4"

008 *(x2)*
BOLT - 5/16x1"

1046 *(x2)*
L BRACKET

074 *(x2)*
T-NUT - 5/16"

USING BRACKET AS A GUIDE, DRILL 3/8" (10mm) HOLE THROUGH DECK

STEP 29 - FORT ASSEMBLY

QTY	PART NUMBER	DESCRIPTION
20	H100088	SCREW PFH 8x1-1/8"

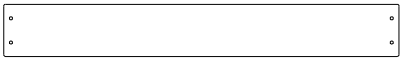

M7 *(x5)* | **WALL SLAT - W103997**
5/8"x3 3/8"x25 3/4" (16x86x654)

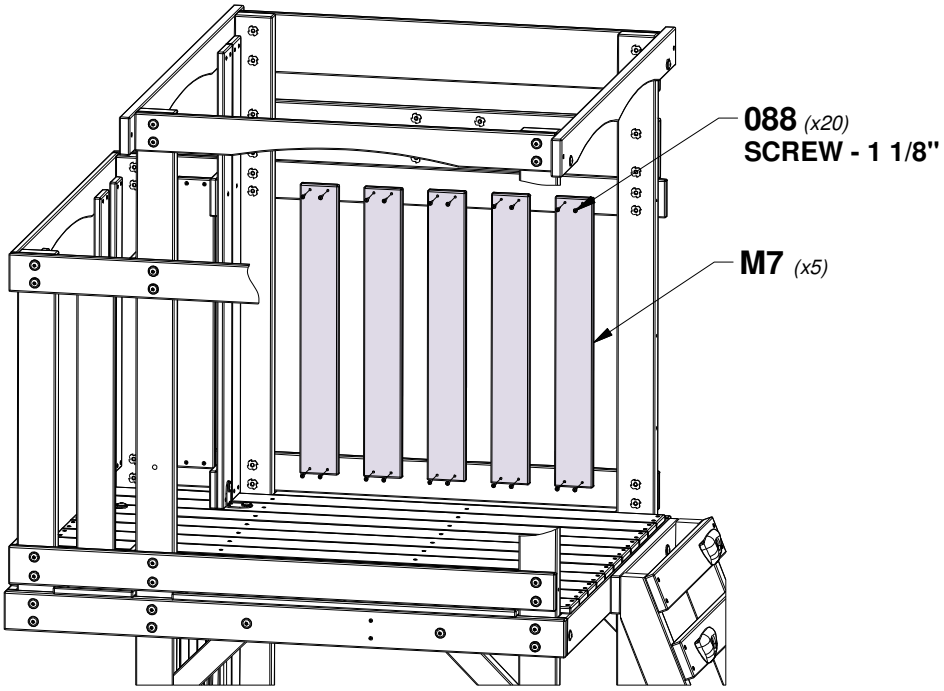

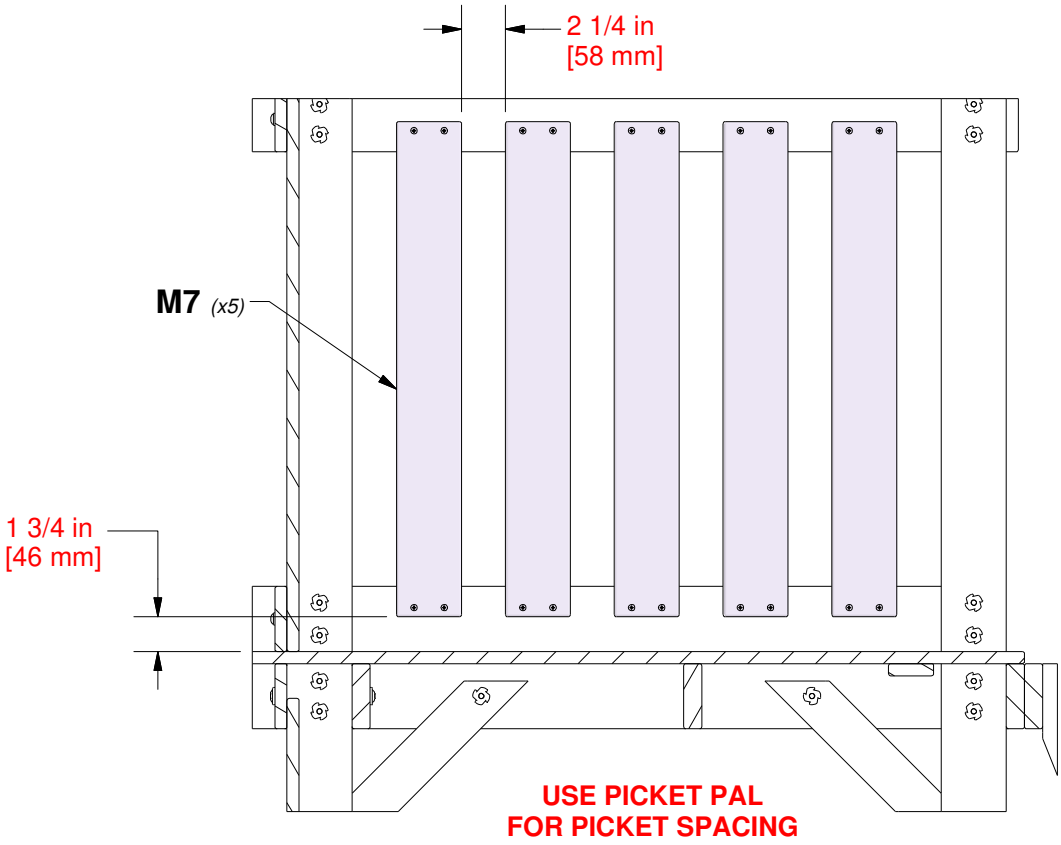

STEP 30 - FORT ASSEMBLY

QTY	PART NUMBER	DESCRIPTION
36	H100088	SCREW PFH 8x1-1/8"

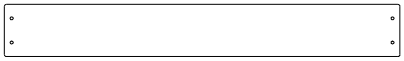

M7 *(x9)* | **WALL SLAT - W103997**
5/8"x3 3/8"x25 3/4" (16x86x654)

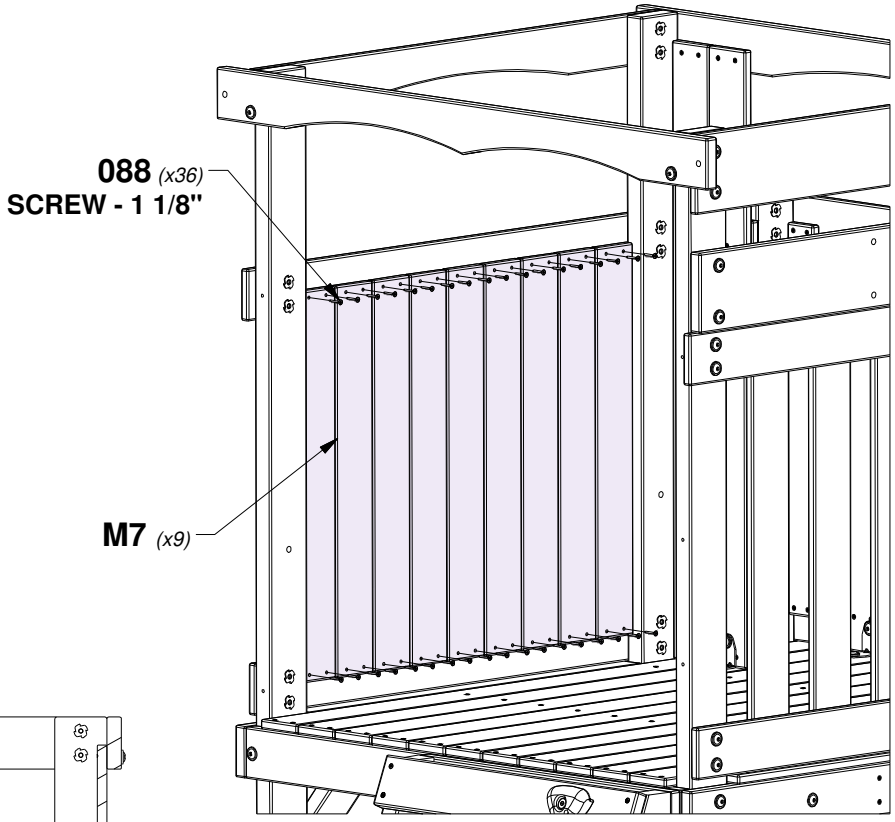

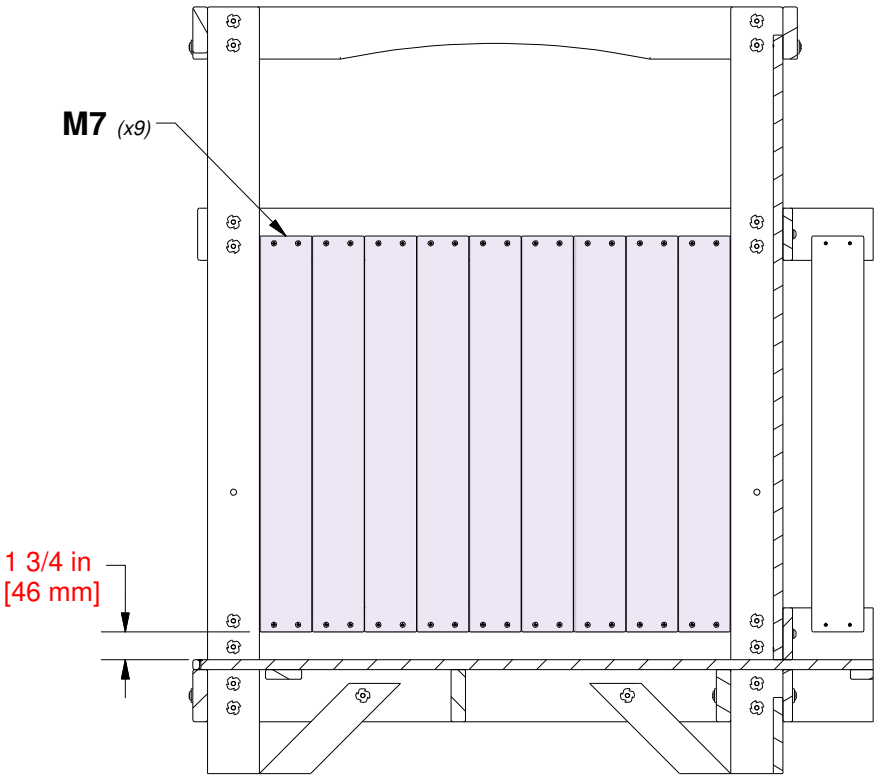

STEP 31 - FORT ASSEMBLY

QTY	PART NUMBER	DESCRIPTION
1	H100027	LAG SCREW WH 5/16x2
2	H100028	LAG SCREW WH 5/16x2 1/2
3	H100030	WASHER LOCK EXT 8x19

M15 *(x1)* **ARCH WALL RAIL - W103979**
5/8"x3 3/8"x40 3/8" (16x86x1024)

M5 *(x1)* **WALL RAIL - W103993**
5/8"x3 3/8"x18 3/8" (16x86x468)

030 *(x2)*
WASHER - 8x19

028 *(x2)*
LAG SCREW - 2 1/2"

M15 *(x1)*

030 *(x1)*
WASHER - 8x19

027 *(x1)*
LAG SCREW - 2"

M5 *(x1)*

STEP 32 - FORT ASSEMBLY

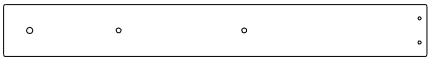

M9 (x1) | **WALL SLAT - W104028**
5/8"x3 3/8"x27 1/2" (16x86x700)

M7 (x2) | **WALL SLAT - W103997**
5/8"x3 3/8"x25 3/4" (16x86x654)

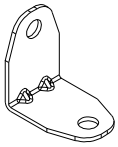

A4M01046 (x1) | **L BRACKET 2.5x38x55x55**

QTY	PART NUMBER	DESCRIPTION
1	H100005	NUT BARREL WH 5/16x7/8
1	H100008	BOLT WH 5/16x1
1	H100031	WASHER LOCK EXT 12x19
1	H100074	T-NUT 5/16
10	H100088	SCREW PFH 8x1-1/8"
1	H100222	BOLT WH 5/16x3/4

TIP:
INSTALL T-NUTS IN WOOD FIRST

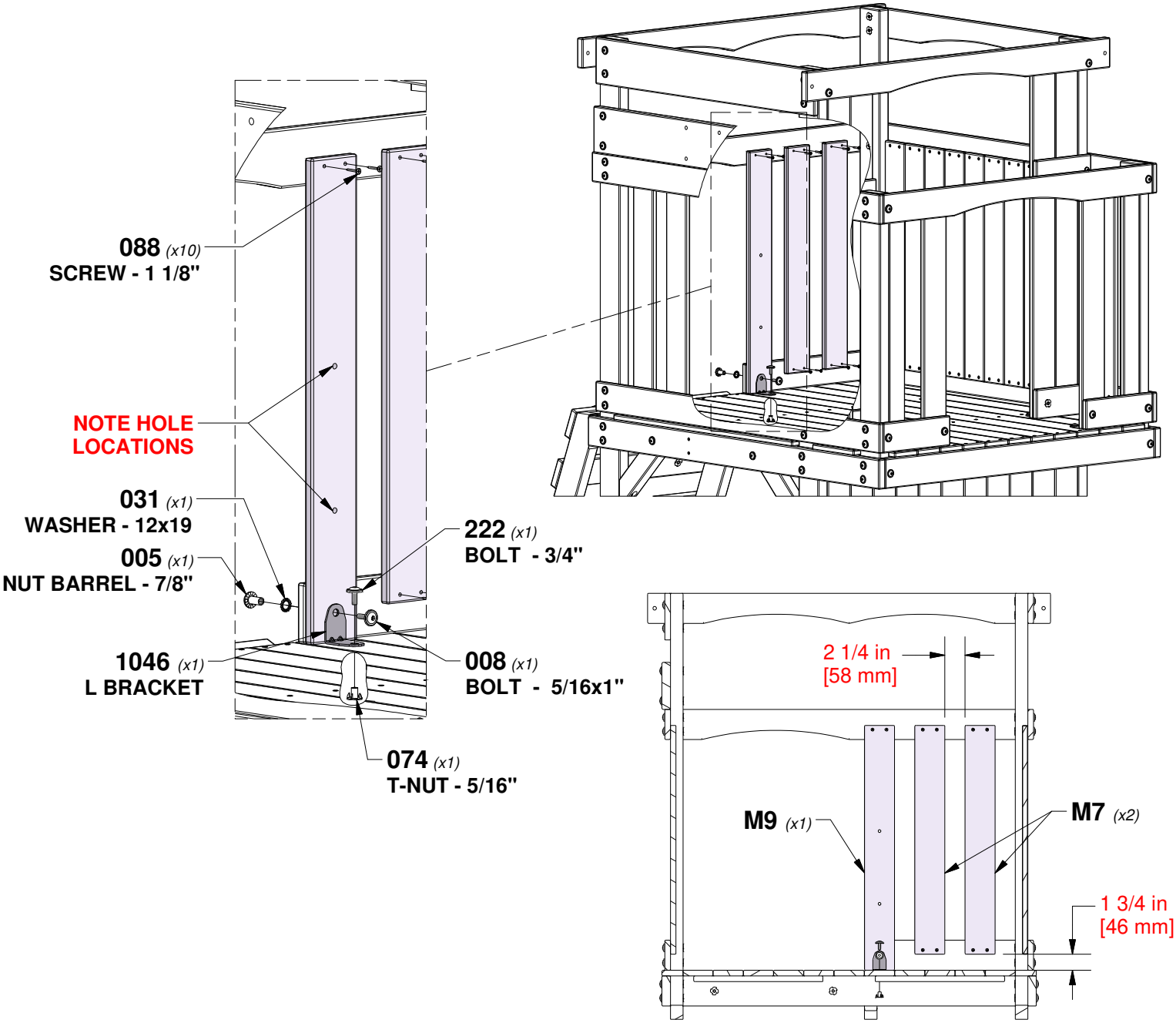

USE PICKET PAL
FOR PICKET SPACING

STEP 33 - FORT ASSEMBLY

QTY	PART NUMBER	DESCRIPTION
2	H100011	BOLT WH 5/16x1 3/4
2	H100030	WASHER LOCK EXT 8x19
2	H100074	T-NUT 5/16

H3 (x2) | **ROOF SUPPORT - W104017**
1"x3 3/8"x29 5/8" (24x86x752)

TIP:
INSTALL T-NUTS IN WOOD FIRST

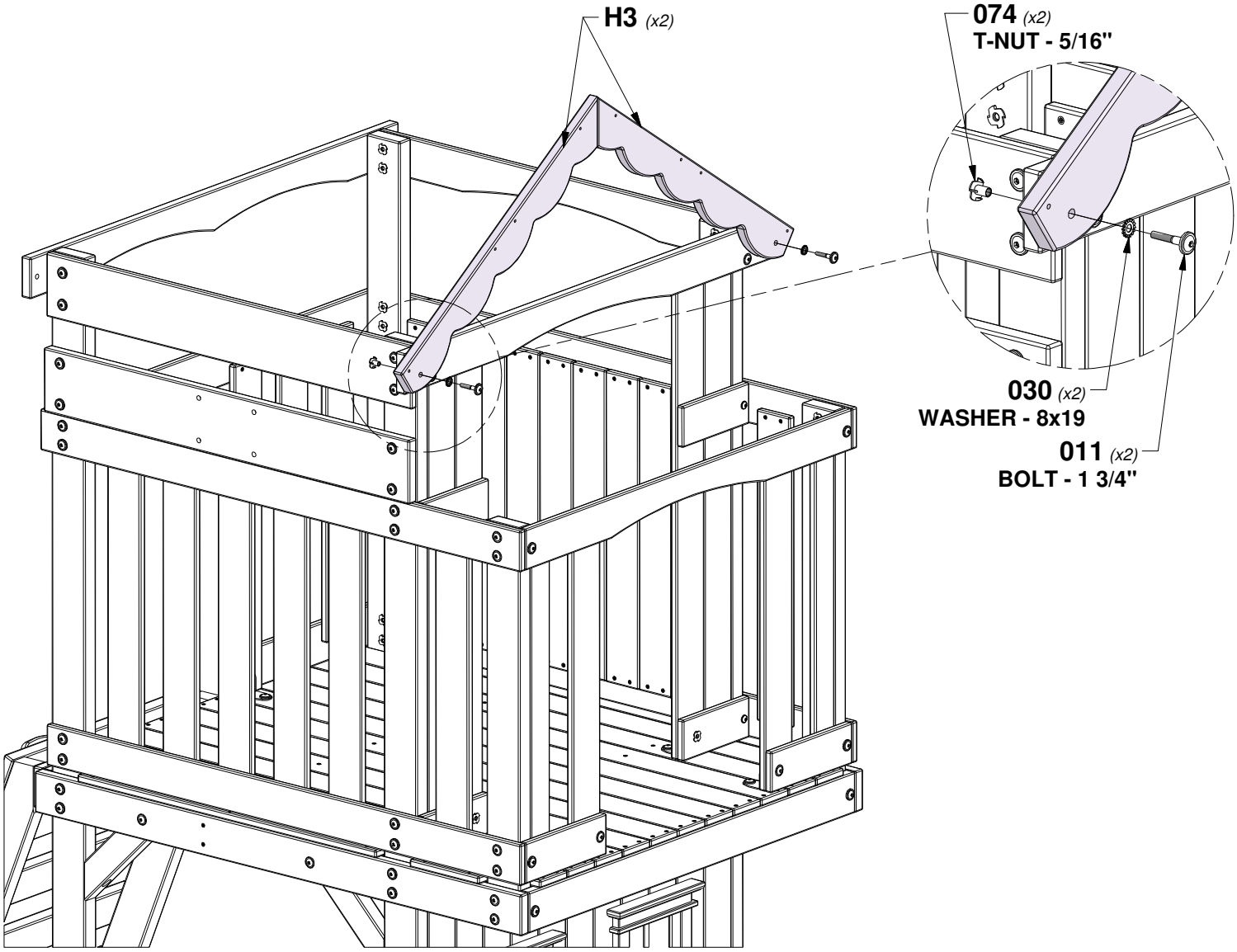

STEP 34 - FORT ASSEMBLY

QTY	PART NUMBER	DESCRIPTION
18	H100088	SCREW PFH 8x1-1/8"

N91 (x6) | **SUNBURST SPOKE - W104026**
5/8"x2 3/8"x7 3/4" (16x60x198)

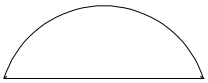

K80 (x3) | **SUNBURST HALF MOON - W103694**
5/8"x3 3/4"x10 3/8" (16x96x264)

N92 (x3) | **VERTICAL SUNBURST SPOKE - W104027**
5/8"x2 3/8"x11 5/8" (16x60x296)

N4 (x3) | **HORIZONTAL SUNBURST BOARD - W104025**
5/8"x2 3/8"x38" (16x60x966)

REPEAT THREE TIMES

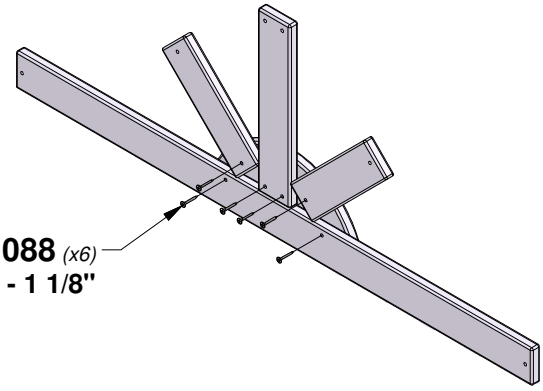

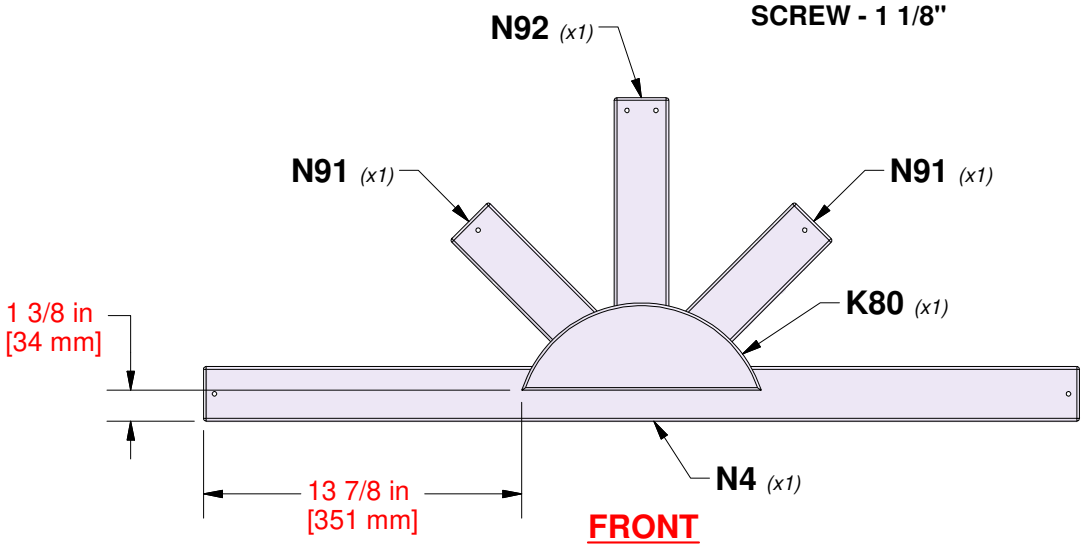

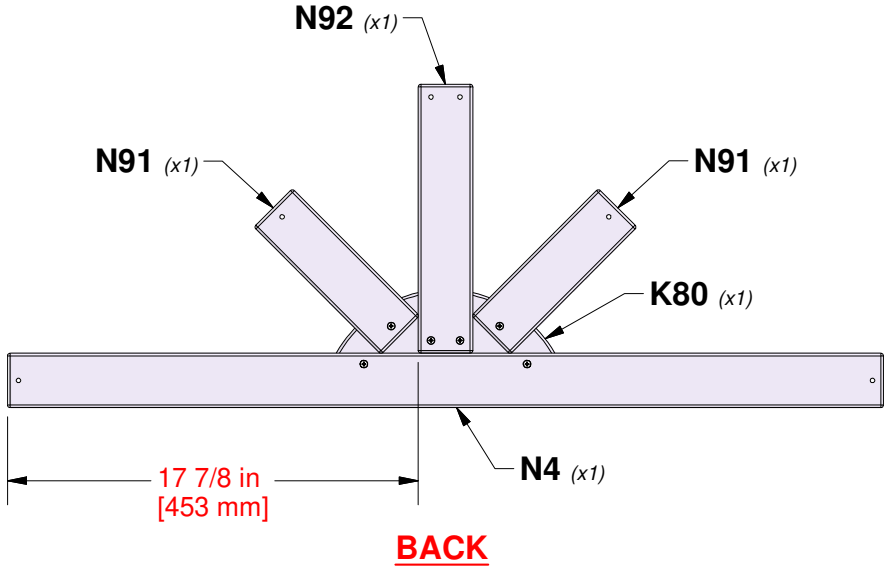

STEP 35 - FORT ASSEMBLY

QTY	PART NUMBER	DESCRIPTION
6	H100088	SCREW PFH 8x1-1/8"

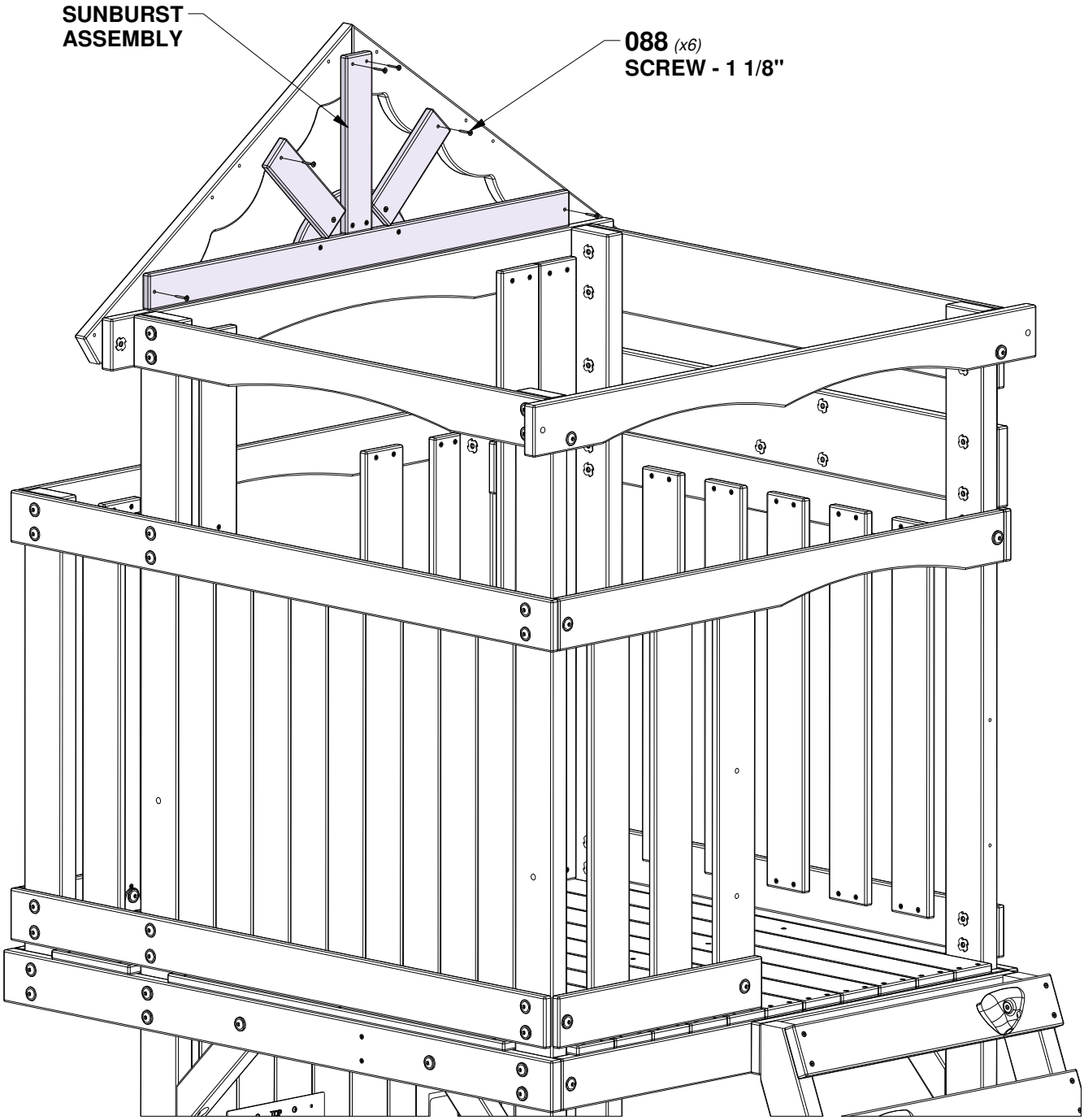

STEP 36 - FORT ASSEMBLY

QTY	PART NUMBER	DESCRIPTION
2	H100011	BOLT WH 5/16x1 3/4
2	H100030	WASHER LOCK EXT 8x19
2	H100074	T-NUT 5/16

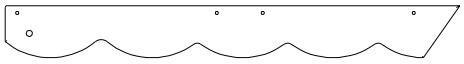

H3 *(x2)* | **ROOF SUPPORT - W104017**
1"x3 3/8"x29 5/8" (24x86x752)

TIP:
INSTALL T-NUTS IN WOOD FIRST

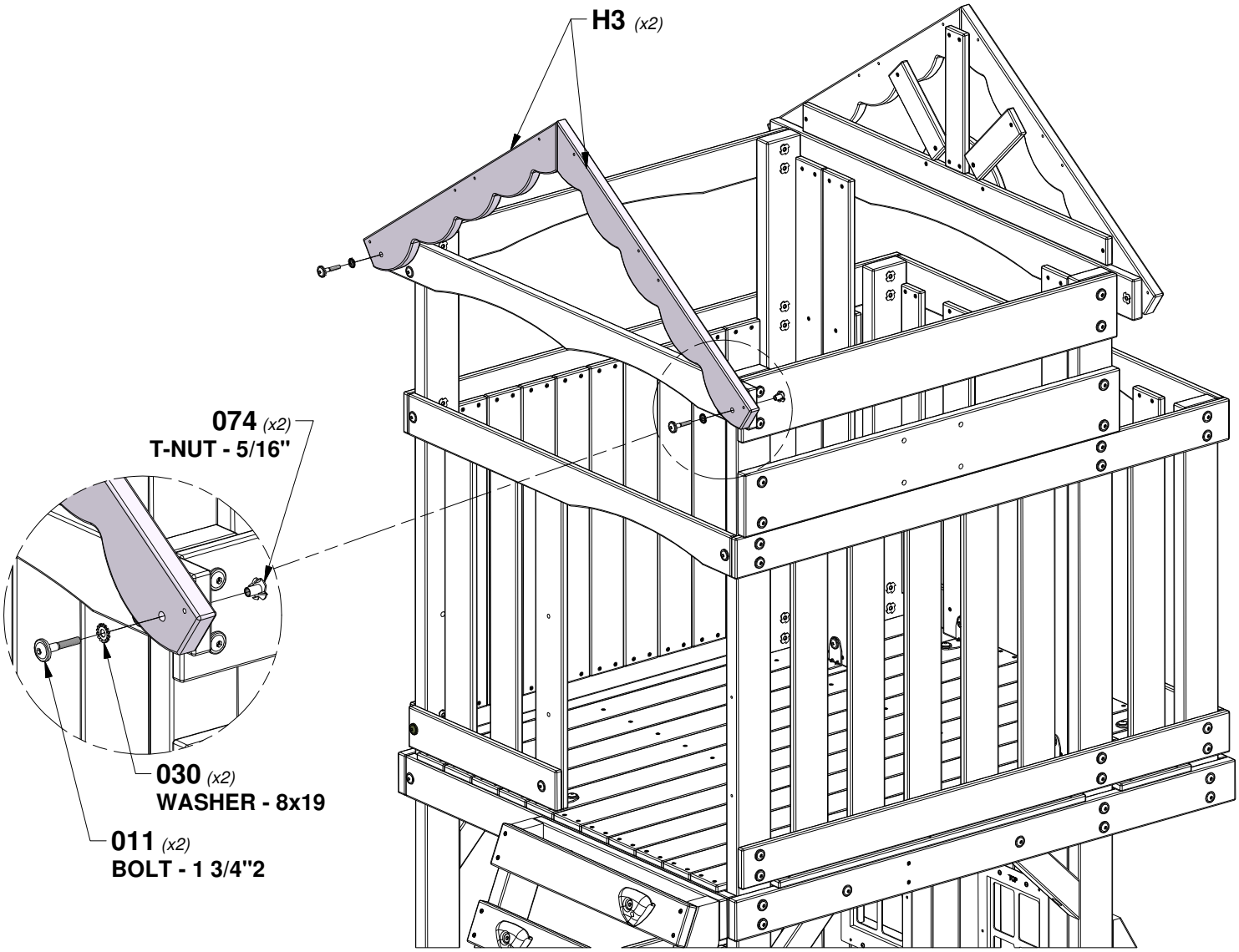

STEP 37 - FORT ASSEMBLY

QTY	PART NUMBER	DESCRIPTION
6	H100088	SCREW PFH 8x1-1/8"

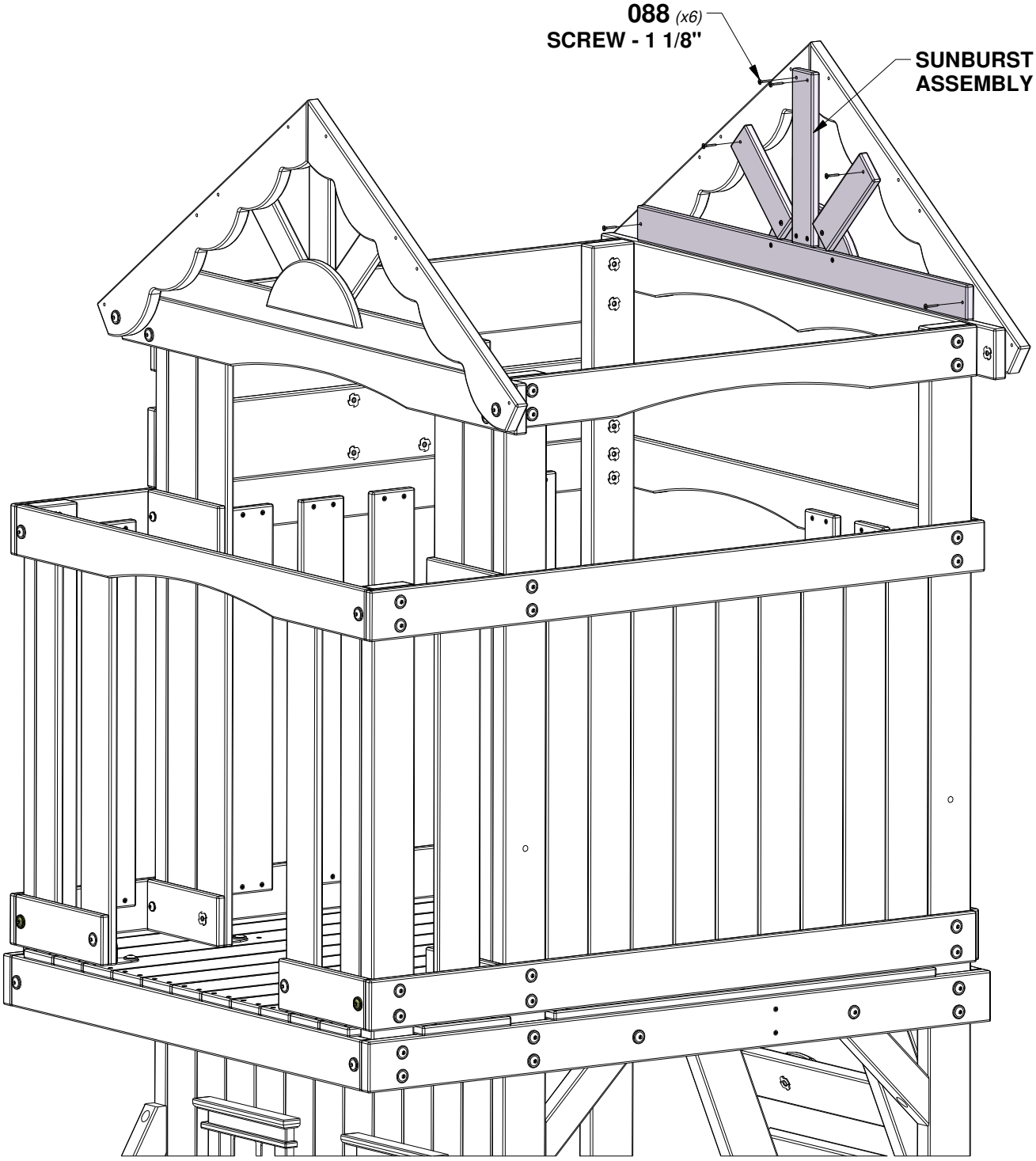

STEP 38 - FORT ASSEMBLY

QTY	PART NUMBER	DESCRIPTION
4	H100111	SCREW PFH 8x2

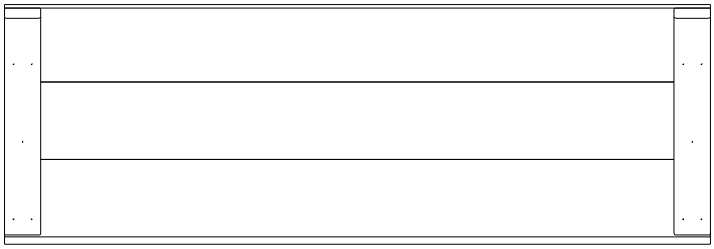

RP2 *(x1)* **ROOF PANEL - W104016**
1 5/8"x15 5/8"x46" (42x396x1168)

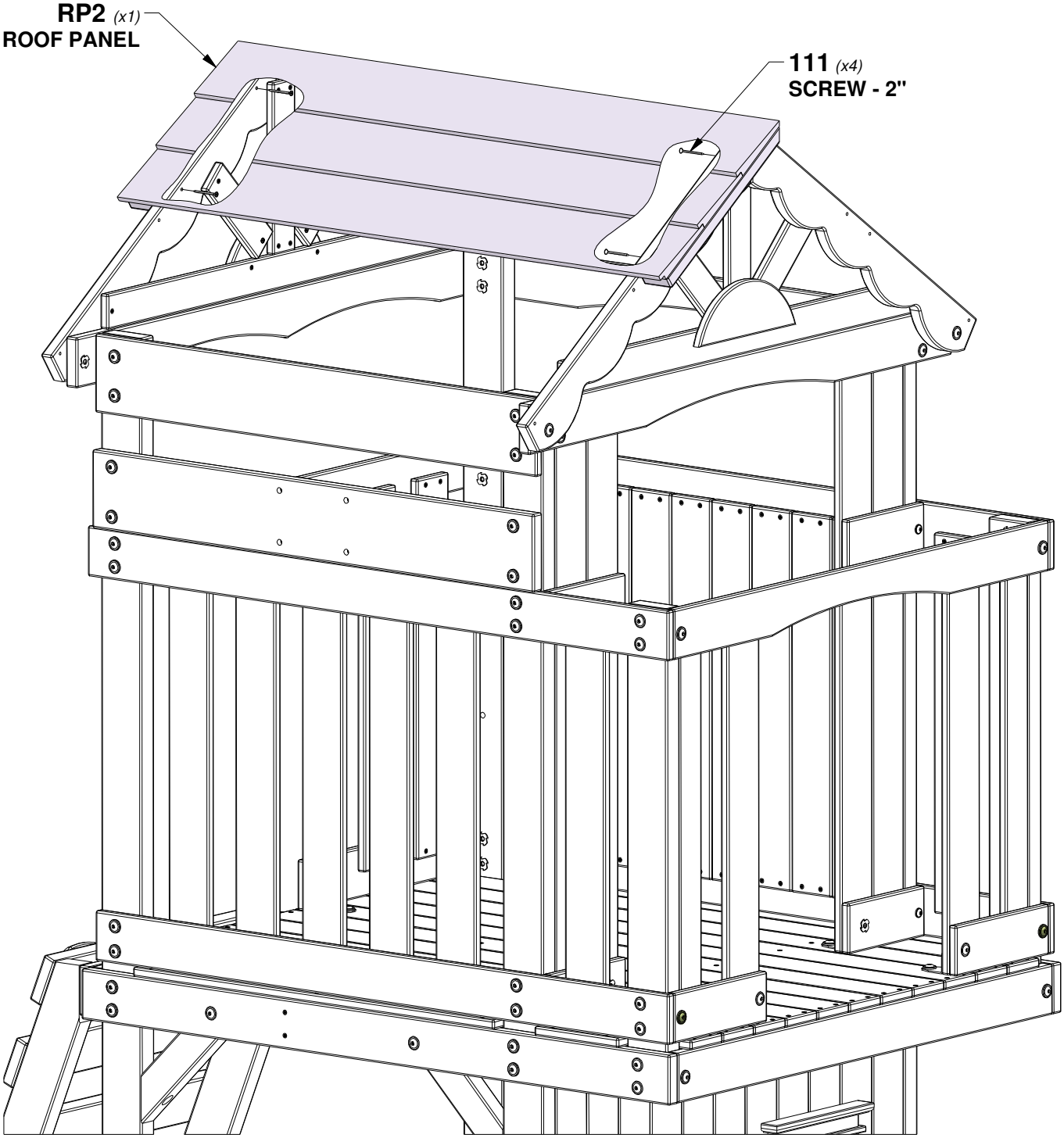

STEP 39 - FORT ASSEMBLY

QTY	PART NUMBER	DESCRIPTION
4	H100111	SCREW PFH 8x2

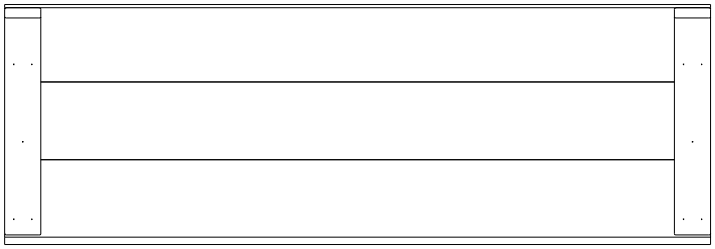

RP2 *(x1)* **ROOF PANEL - W104016**
1 5/8"x15 5/8"x46" (42x396x1168)

111 *(x4)*
SCREW - 2"

RP2 *(x1)*
ROOF PANEL

STEP 40 - FORT ASSEMBLY

QTY	PART NUMBER	DESCRIPTION
4	H100111	SCREW PFH 8x2

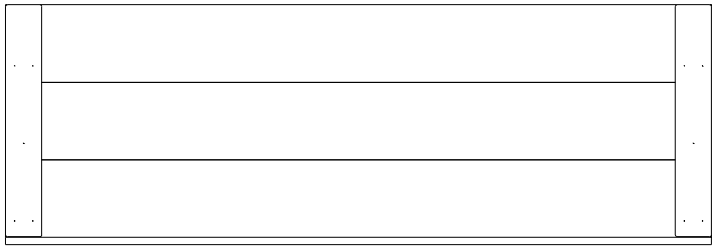

RP1 *(x1)* **ROOF PANEL - W104015**
1 5/8"x15 5/8"x46" (42x396x1168)

111 *(x4)*
SCREW - 2"

RP1 *(x1)*
ROOF PANEL

STEP 41 - FORT ASSEMBLY

QTY	PART NUMBER	DESCRIPTION
4	H100111	SCREW PFH 8x2

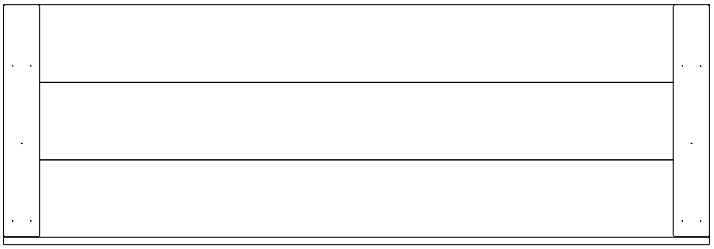

RP1 *(x1)* | **ROOF PANEL - W104015**
1 5/8"x15 5/8"x46" (42x396x1168)

111 *(x4)*
SCREW - 2"

RP1 *(x1)*
ROOF PANEL

STEP 42 - FORT ASSEMBLY

QTY	PART NUMBER	DESCRIPTION
4	H100028	LAG SCREW WH 5/16x2 1/2
4	H100030	WASHER LOCK EXT 8x19

E2 (x1) | **PICNIC UPRIGHT - W4L16842**
1 3/8"x3 3/8"x56 1/8" (36x86x1426)

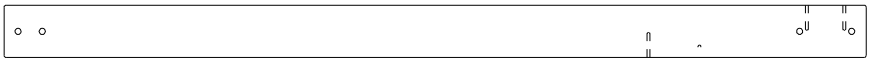

E7 (x1) | **PICNIC UPRIGHT - W4L16843**
1 3/8"x3 3/8"x56 1/8" (36x86x1426)

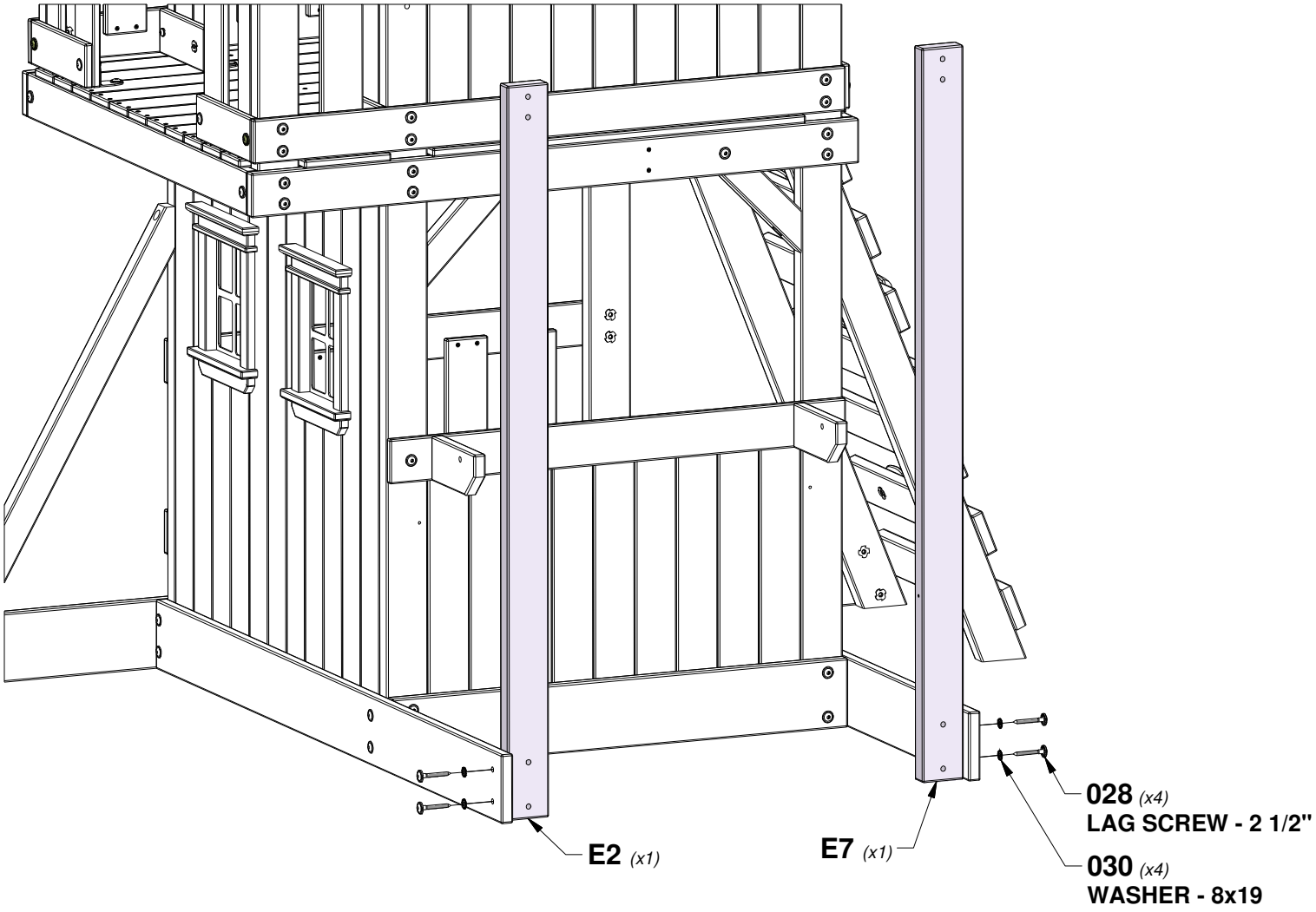

STEP 43 - FORT ASSEMBLY

QTY	PART NUMBER	DESCRIPTION
4	H100013	BOLT WH 5/16x2 1/4
4	H100030	WASHER LOCK EXT 8x19
4	H100074	T-NUT 5/16

G1 (x1) | **GROUND BOARD - W103967**
1"x5 1/4"x37 1/2" (24x134x952)

TIP:
INSTALL T-NUTS IN WOOD FIRST

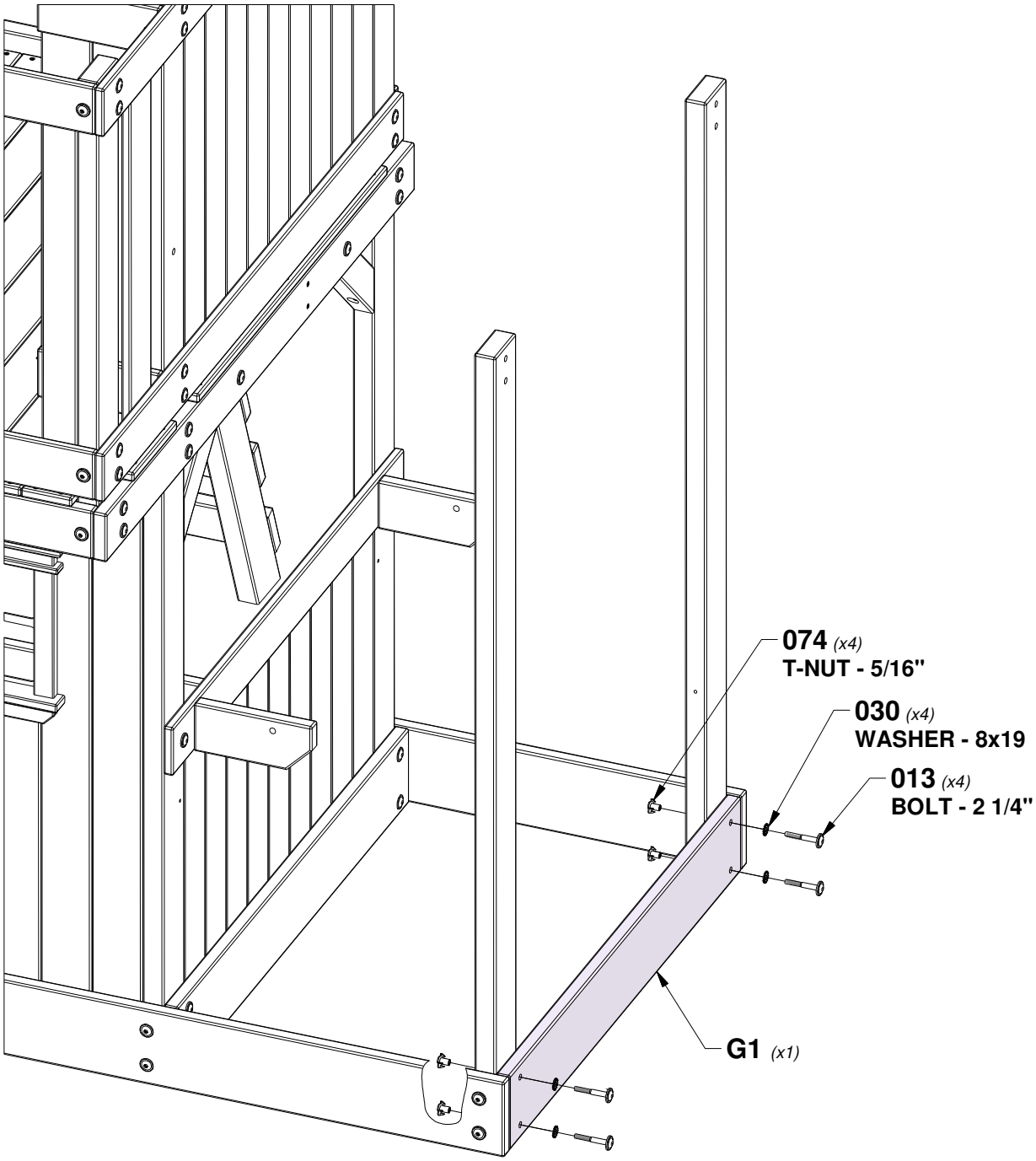

STEP 44 - FORT ASSEMBLY

H4 (x2) | **ROOF SUPPORT - W104024**
1"x3 3/8"x29 5/8" (24x86x752)

QTY	PART NUMBER	DESCRIPTION
2	H100013	BOLT WH 5/16x2 1/4
2	H100030	WASHER LOCK EXT 8x19
2	H100074	T-NUT 5/16
2	H100086	SCREW PFH 8x1-1/2"

TIP:
INSTALL T-NUTS IN WOOD FIRST

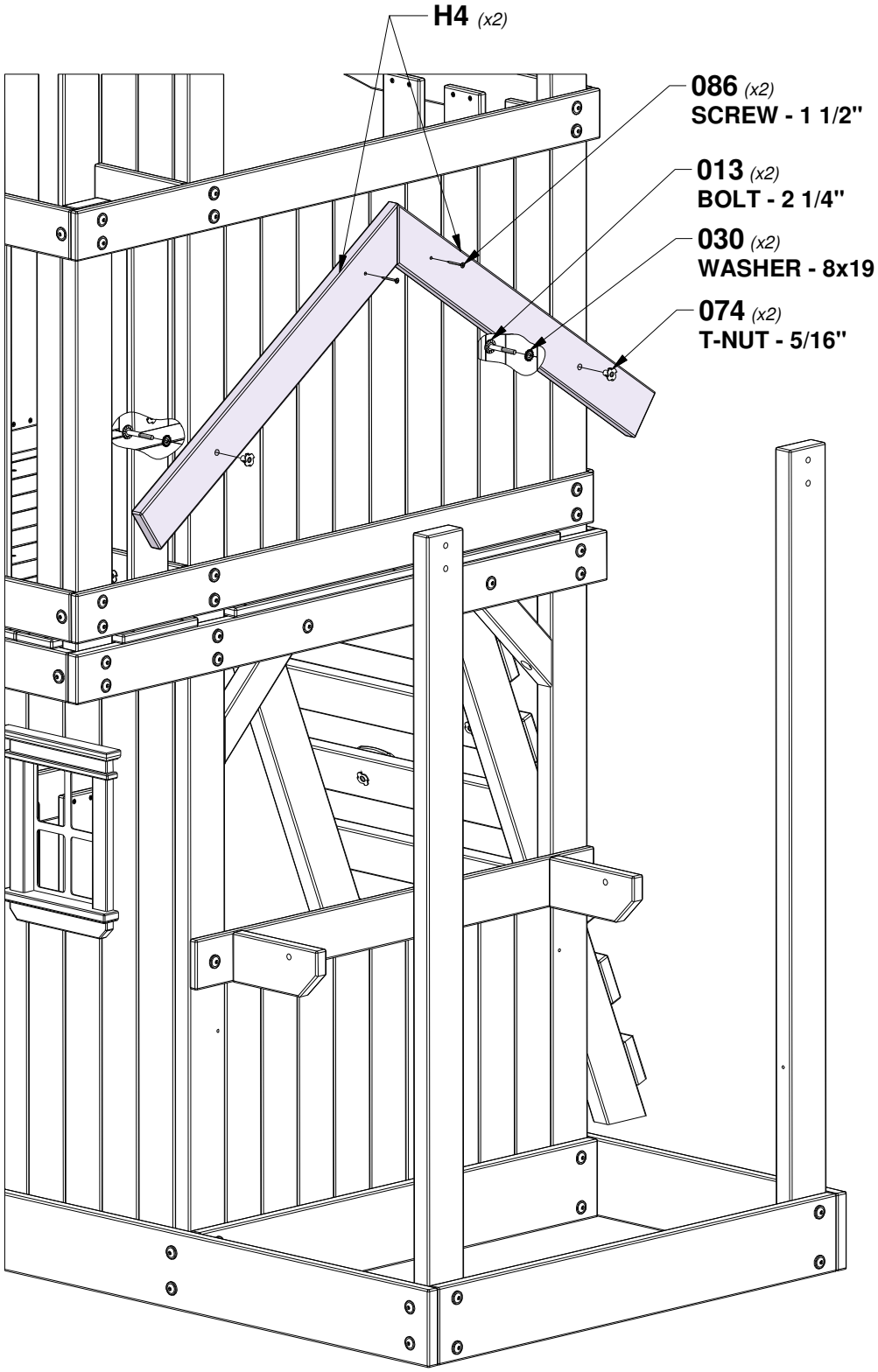

STEP 45 - FORT ASSEMBLY

QTY	PART NUMBER	DESCRIPTION
4	H100013	BOLT WH 5/16x2 1/4
4	H100030	WASHER LOCK EXT 8x19
4	H100074	T-NUT 5/16

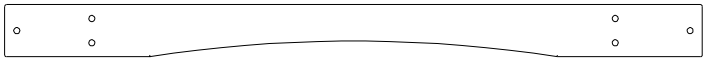

H14 *(x1)* | **LEMONADE ROOF SUPPORT - W104019**
1"x3 3/8"x45 3/8" (24x86x1154)

TIP:
INSTALL T-NUTS IN WOOD FIRST

074 *(x4)*
T-NUT - 5/16"

030 *(x4)*
WASHER - 8x19

013 *(x4)*
BOLT - 2 1/4"

H14 *(x1)*

STEP 46 - FORT ASSEMBLY

QTY	PART NUMBER	DESCRIPTION
2	H100011	BOLT WH 5/16x1 3/4
2	H100030	WASHER LOCK EXT 8x19
2	H100074	T-NUT 5/16

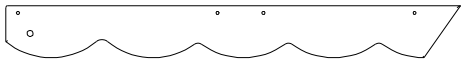

H3 *(x2)* | **ROOF SUPPORT - W104017**
1"x3 3/8"x29 5/8" (24x86x752)

TIP:
INSTALL T-NUTS IN WOOD FIRST

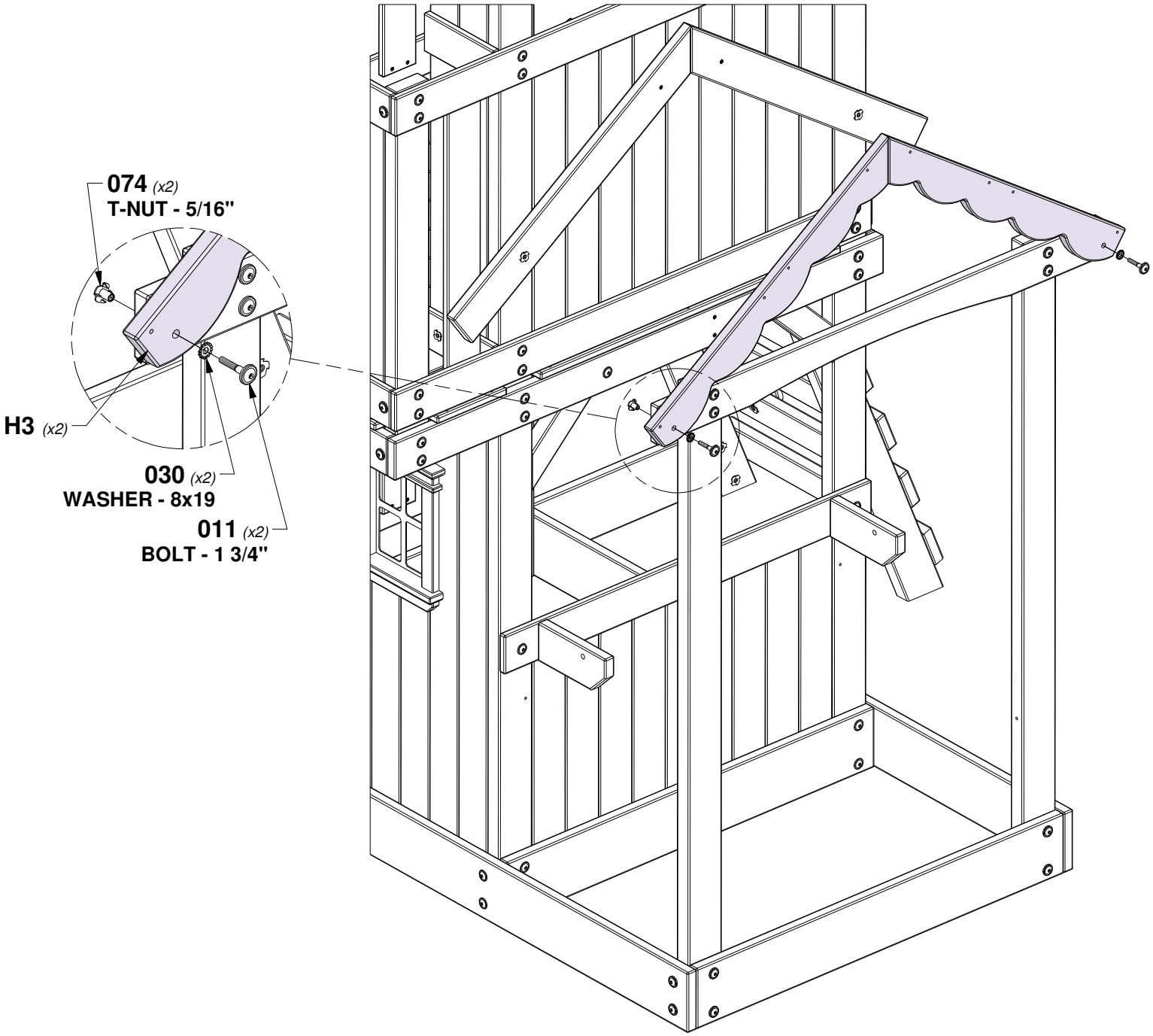

STEP 47 - FORT ASSEMBLY

QTY	PART NUMBER	DESCRIPTION
6	H100088	SCREW PFH 8x1-1/8"

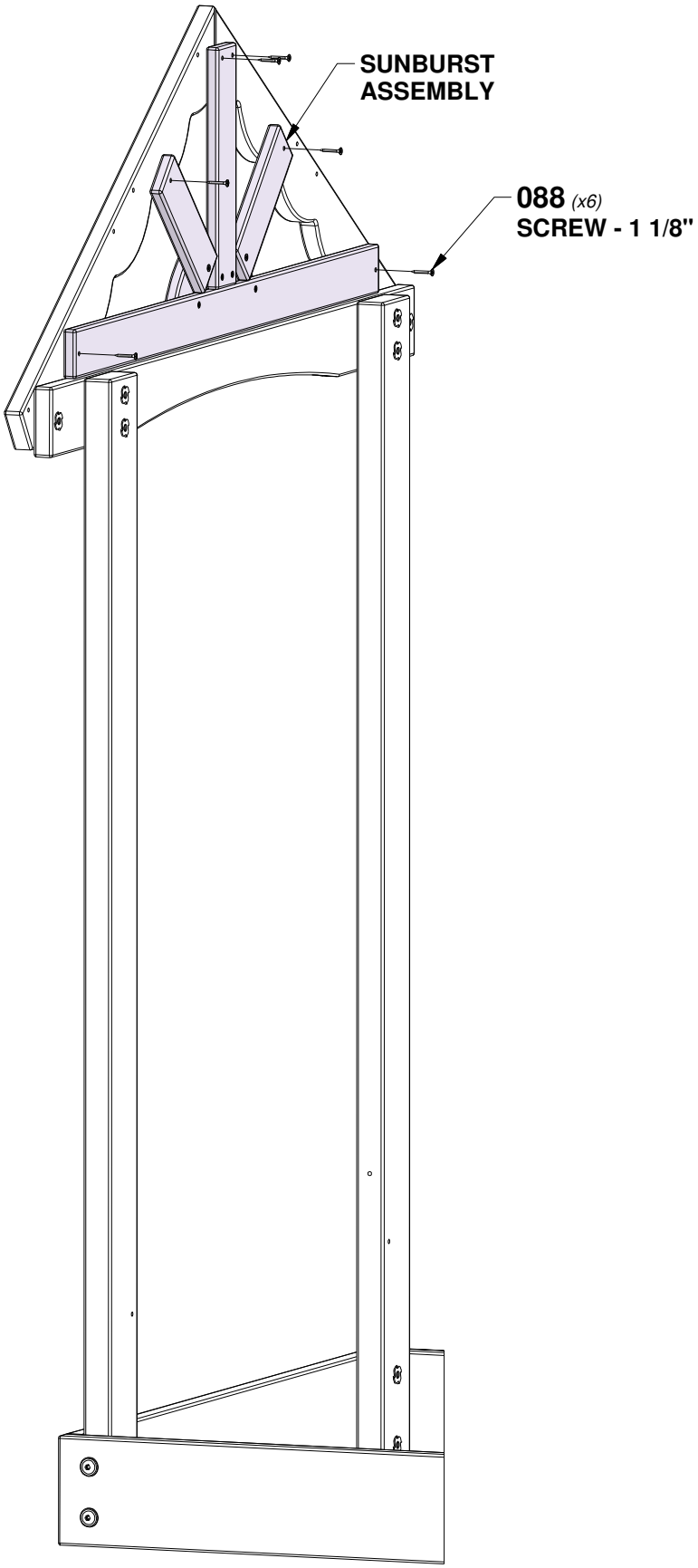

STEP 48 - FORT ASSEMBLY

QTY	PART NUMBER	DESCRIPTION
8	H100086	SCREW PFH 8x1-1/2"

M22 *(x1)* **UPRIGHT - W104014**
5/8"x3 3/8"x50 7/8" (16x86x1292)

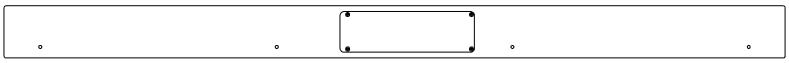

M25 *(x1)* **UPRIGHT W/TAG - W2A03451**
5/8"x3 3/8"x50 7/8" (16x86x1292)

M25 *(x1)*
UPRIGHT W/TAG

M22 *(x1)*

086 *(x8)*
SCREW - 1 1/2"

STEP 49 - FORT ASSEMBLY

QTY	PART NUMBER	DESCRIPTION
6	H100087	SCREW PFH 8x1-1/4"
2	H100111	SCREW PFH 8x2

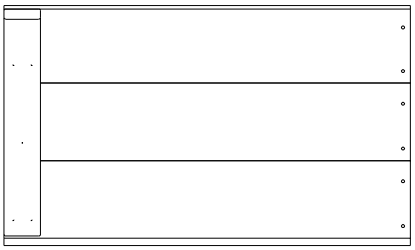

RP4 *(x1)* **ROOF PANEL - W104021**
1 5/8"x15 5/8"x46" (42x396x672)

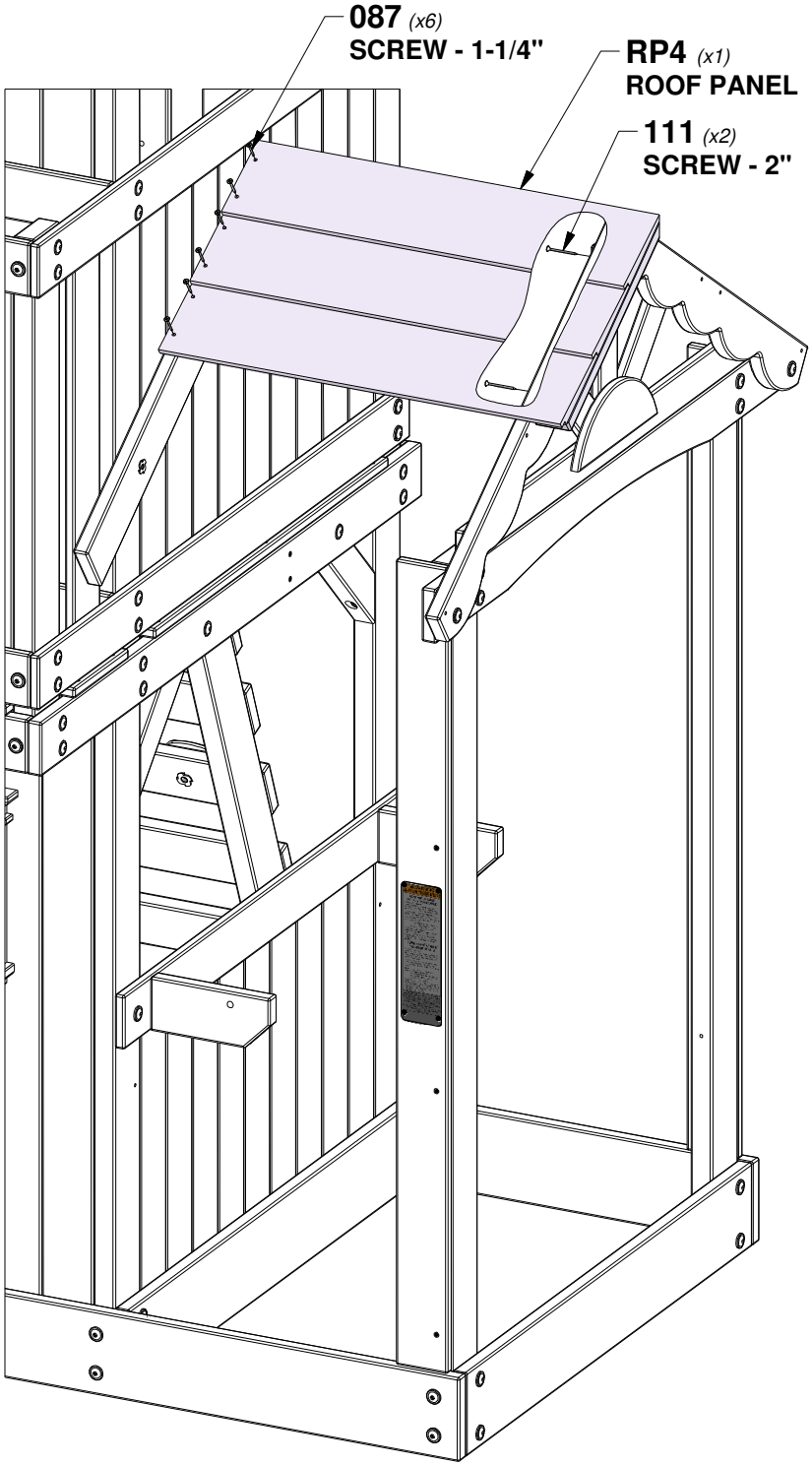

STEP 50 - FORT ASSEMBLY

QTY	PART NUMBER	DESCRIPTION
6	H100087	SCREW PFH 8x1-1/4"
2	H100111	SCREW PFH 8x2

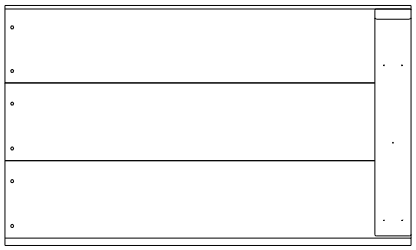

RP6 *(x1)* **ROOF PANEL - W104023**
1 5/8"x15 5/8"x46" (42x396x672)

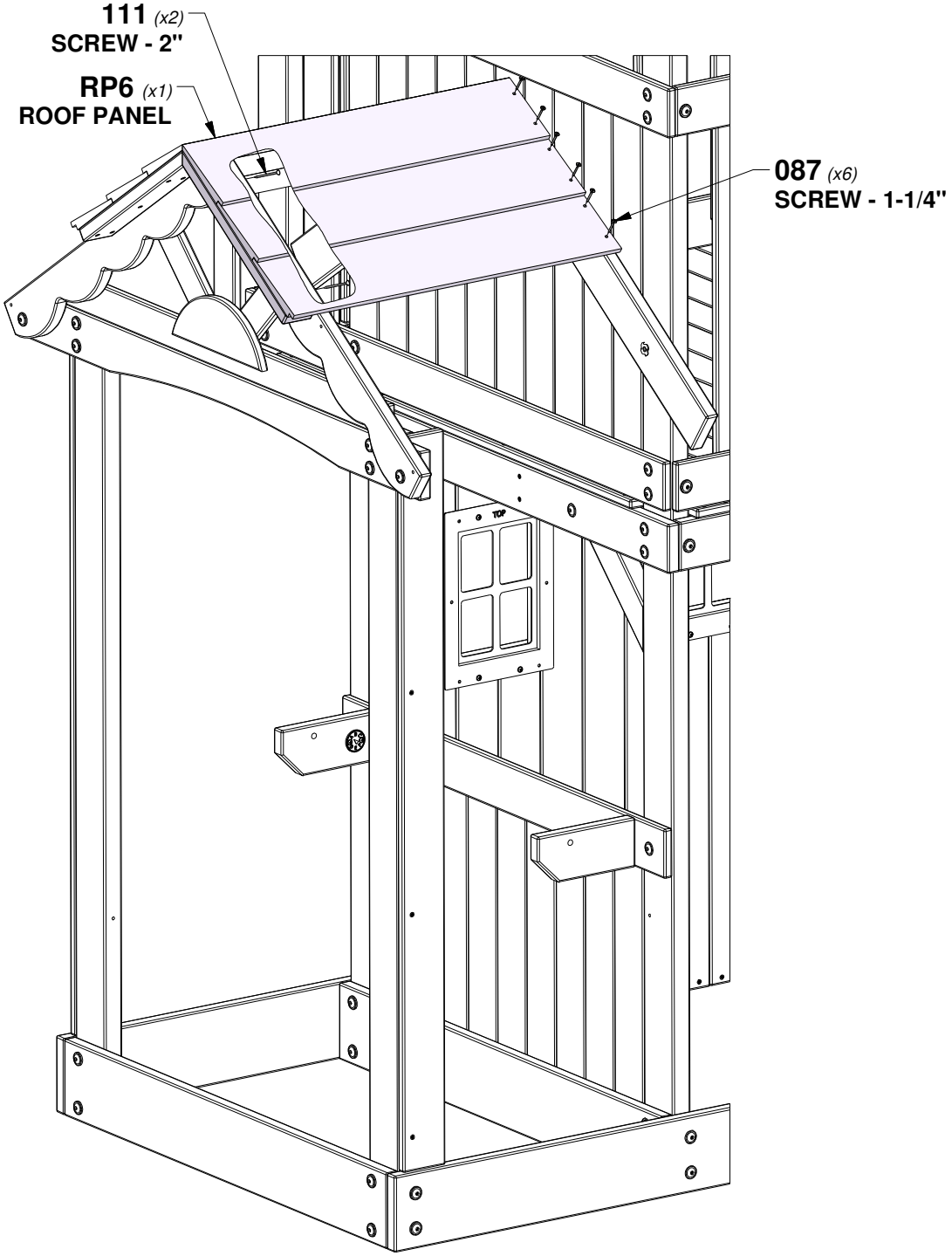

STEP 51 - FORT ASSEMBLY

QTY	PART NUMBER	DESCRIPTION
6	H100087	SCREW PFH 8x1-1/4"
2	H100111	SCREW PFH 8x2

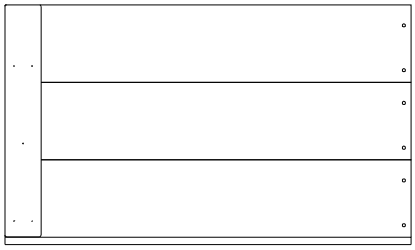

RP3 *(x1)* | **ROOF PANEL - W104020**
1 5/8"x15 5/8"x26 1/2" (42x396x672)

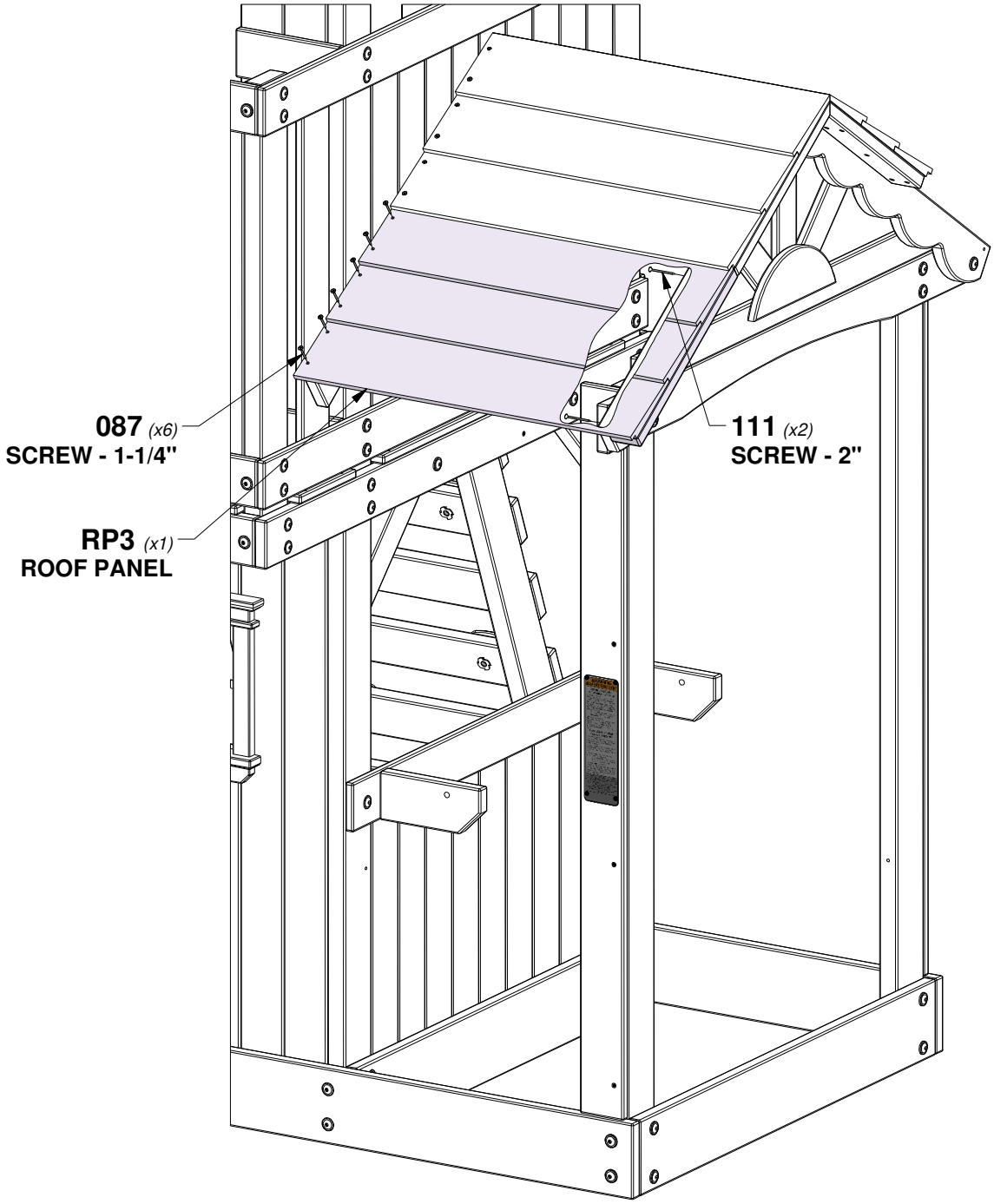

STEP 52 - FORT ASSEMBLY

QTY	PART NUMBER	DESCRIPTION
6	H100087	SCREW PFH 8x1-1/4"
2	H100111	SCREW PFH 8x2

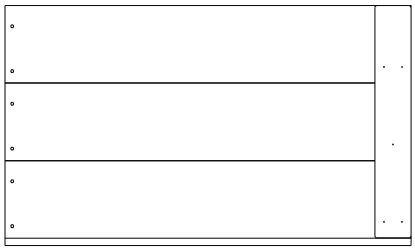

RP5 *(x1)* | **ROOF PANEL - W104022**
1 5/8"x15 5/8"x46" (42x396x672)

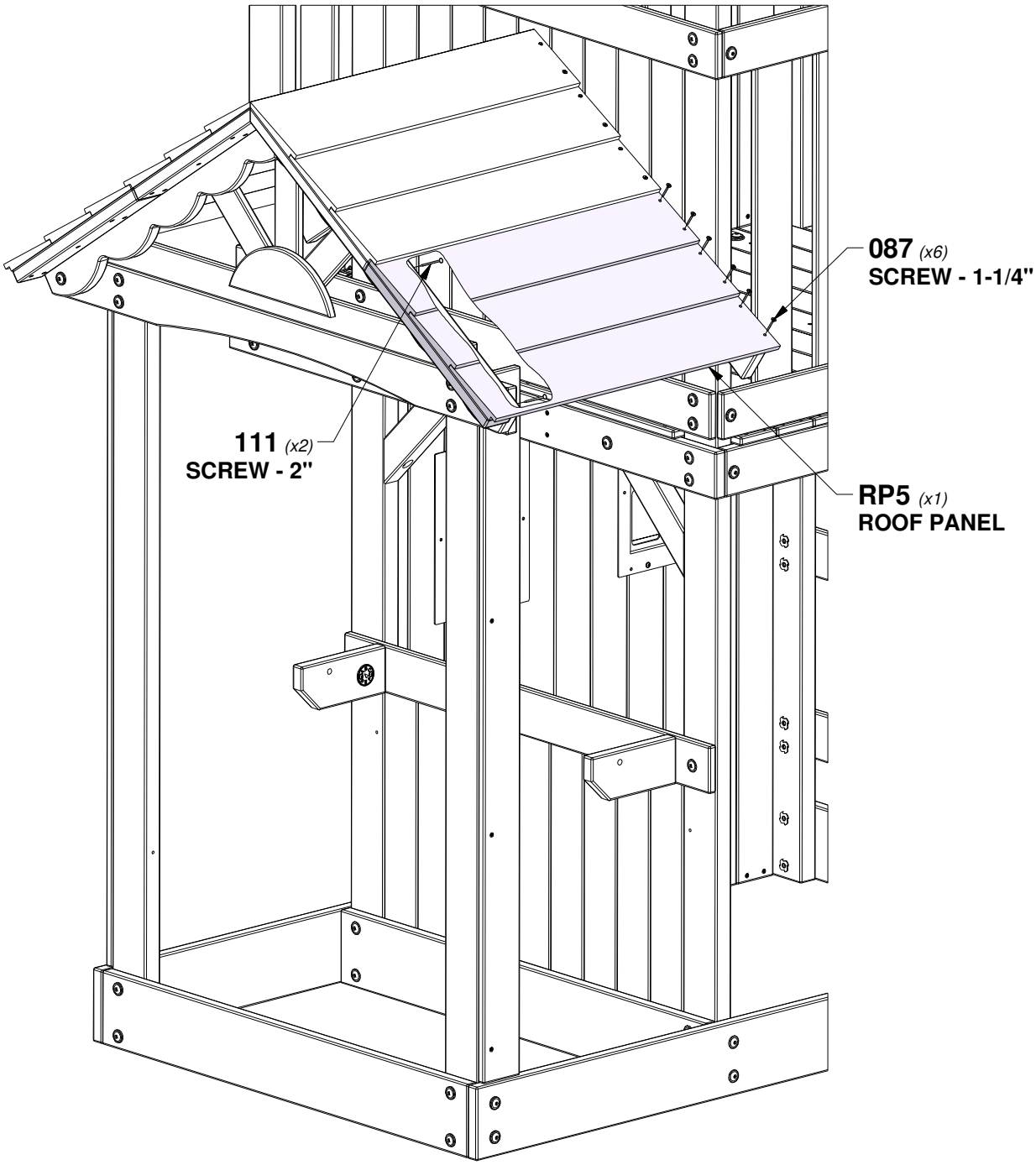

STEP 53 - FORT ASSEMBLY

F2 (x2) | **SHELF BRACE - W4L16357**
1 3/8"x2 3/8"x11 3/4" (36x60x300)

QTY	PART NUMBER	DESCRIPTION
2	H100013	BOLT WH 5/16x2 1/4
2	H100030	WASHER LOCK EXT 8x19
2	H100074	T-NUT 5/16
2	H100138	WASHER LOCK EXT 6x15
2	H100146	LAG SCREW WH 1/4x2

TIP:
INSTALL T-NUTS IN WOOD FIRST

074 *(x2)*
T-NUT - 5/16"

030 *(x2)*
WASHER - 8x19

013 *(x2)*
BOLT - 2 1/4"

F2 *(x2)*

138 *(x2)*
WASHER - 6x15

146 *(x2)*
LAG SCREW - 2"

STEP 54 - FORT ASSEMBLY

QTY	PART NUMBER	DESCRIPTION
12	H100089	SCREW PFH 8x1-3/4"

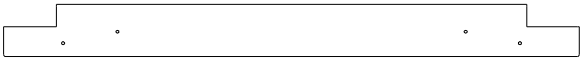

H5 *(x1)* | **SHELF BOARD - W104006**
1"x3 3/8"x37 1/2" (24x86x952)

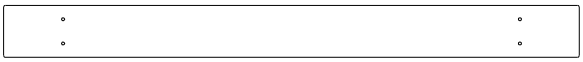

H6 *(x1)* | **SHELF BOARD - W104007**
1"x3 3/8"x37 1/2" (24x86x952)

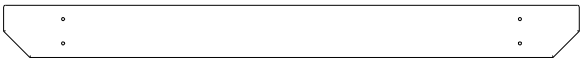

H7 *(x1)* | **SHELF BOARD - W104008**
1"x3 3/8"x37 1/2" (24x86x952)

089 *(x12)*
SCREW - 1 3/4"

USING H5, H6, & H7 AS A GUIDE, DRILL 1/8" (3mm) HOLE

H5 *(x1)*

H6 *(x1)*

H7 *(x1)*

STEP 55 - FORT ASSEMBLY

QTY	PART NUMBER	DESCRIPTION
2	H100028	LAG SCREW WH 5/16x2 1/2
2	H100030	WASHER LOCK EXT 8x19

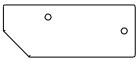

H2 *(x2)* | **SEAT SUPPORT - W104010**
1"x3 3/8"x8 5/8" (24x86x218)

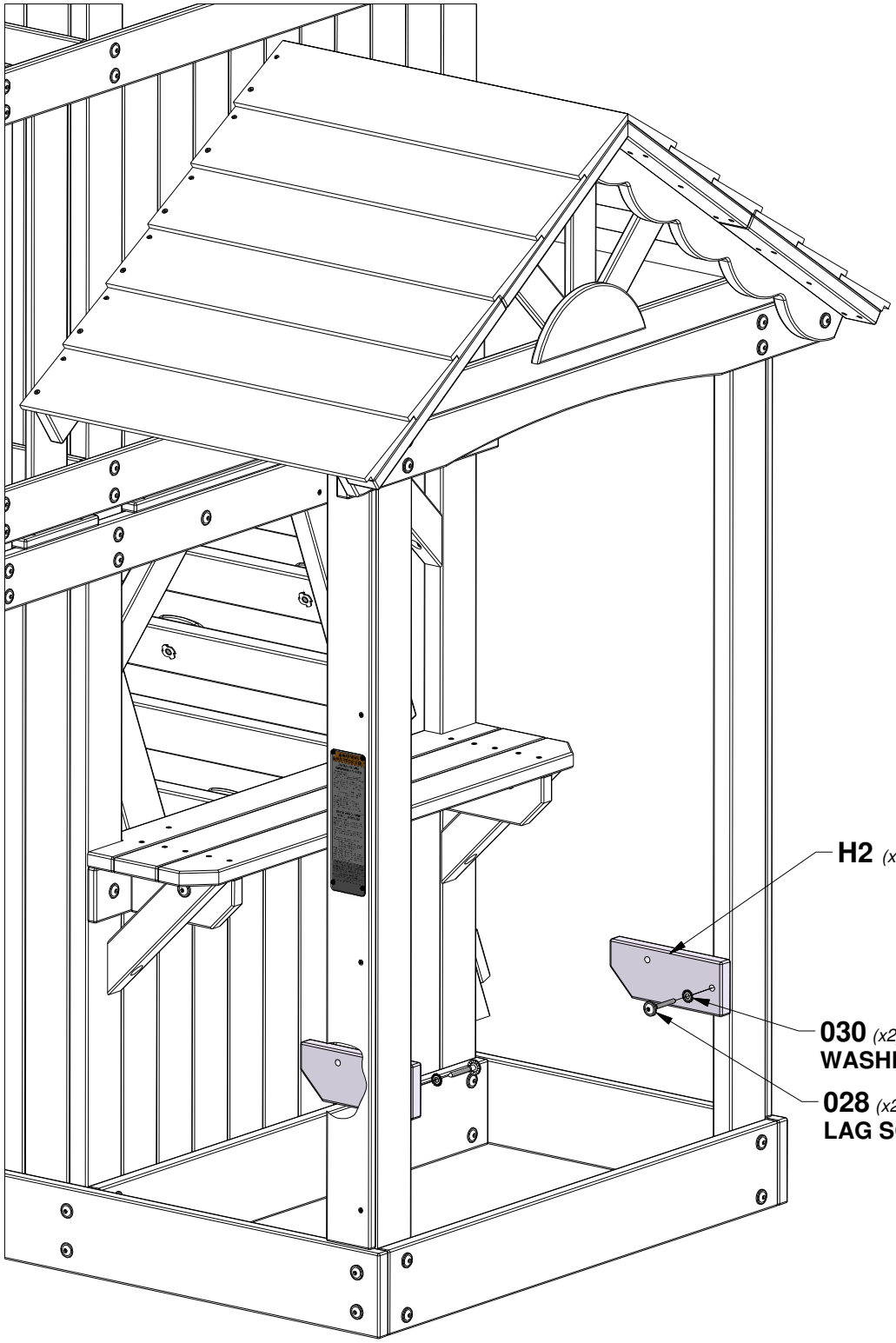

STEP 56 - FORT ASSEMBLY

F1 (x2) | **SEAT BRACE - W104012**
1 3/8"x2 3/8"x9 1/2" (36x60x240)

QTY	PART NUMBER	DESCRIPTION
2	H100013	BOLT WH 5/16x2 1/4
2	H100030	WASHER LOCK EXT 8x19
2	H100074	T-NUT 5/16
2	H100138	WASHER LOCK EXT 6x15
2	H100146	LAG SCREW WH 1/4x2

TIP:
INSTALL T-NUTS IN WOOD FIRST

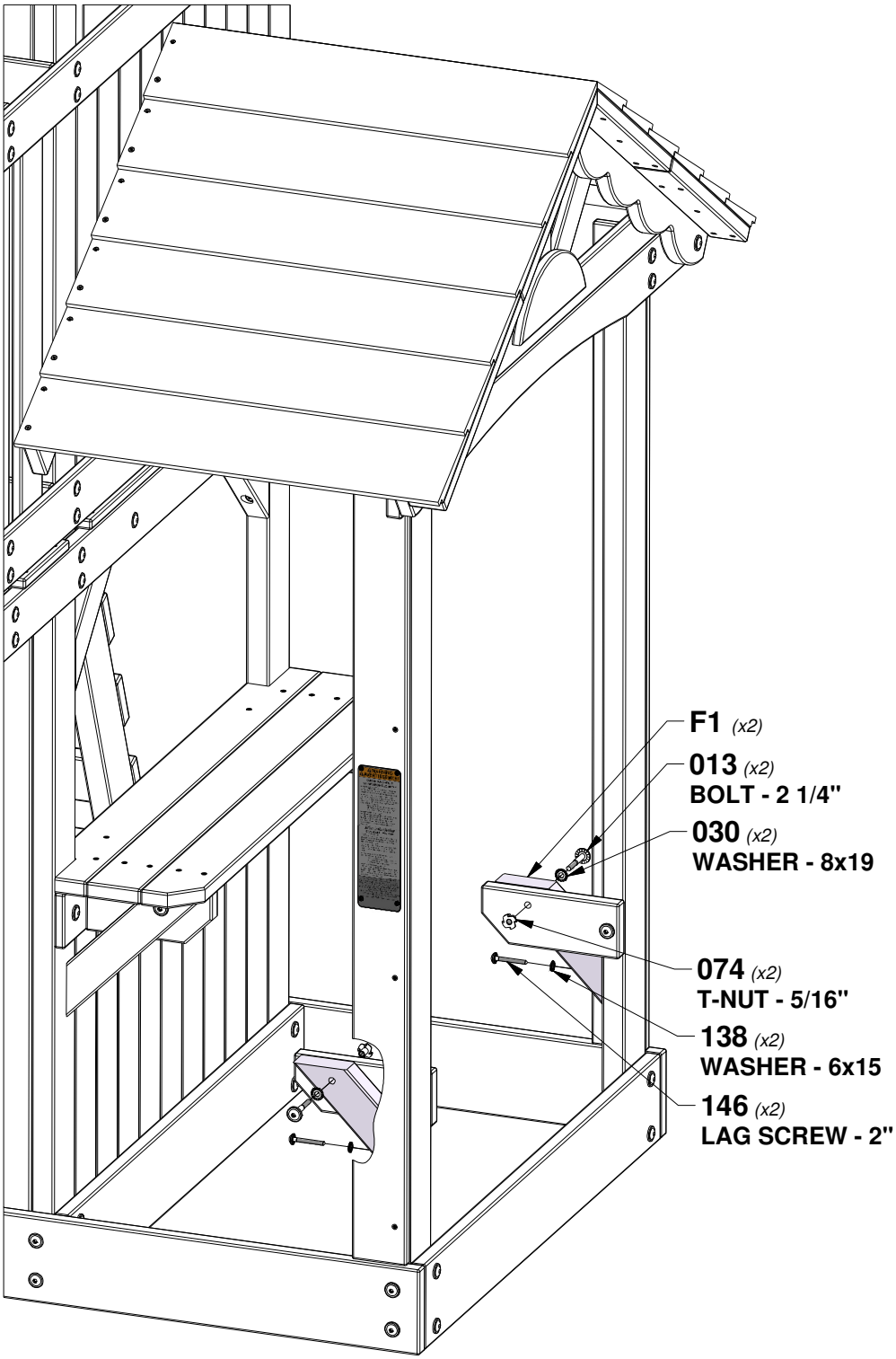

STEP 57 - FORT ASSEMBLY

QTY	PART NUMBER	DESCRIPTION
8	H100111	SCREW PFH 8x2

Q2 *(x1)* | **SEAT BOARD - W104013**
1"x4 3/8"x37 1/2" (24x112x952)

Q1 *(x1)* | **SEAT BOARD - W104011**
1"x4 3/8"x37 1/2" (24x112x952)

111 *(x8)*
SCREW - 2"

Q2 *(x1)*

Q1 *(x1)*

STEP 58 - FORT ASSEMBLY

QTY	PART NUMBER	DESCRIPTION
2	H100072	T-NUT 1/4
2	H100137	BOLT WH 1/4x1
4	H100138	WASHER LOCK EXT 6x15
2	H100145	LAG SCREW WH 1/4x1-1/2

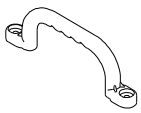

A100028 *(x2)* | **HAND GRIP GREEN PLASTIC**

TIP:
INSTALL T-NUTS IN WOOD FIRST

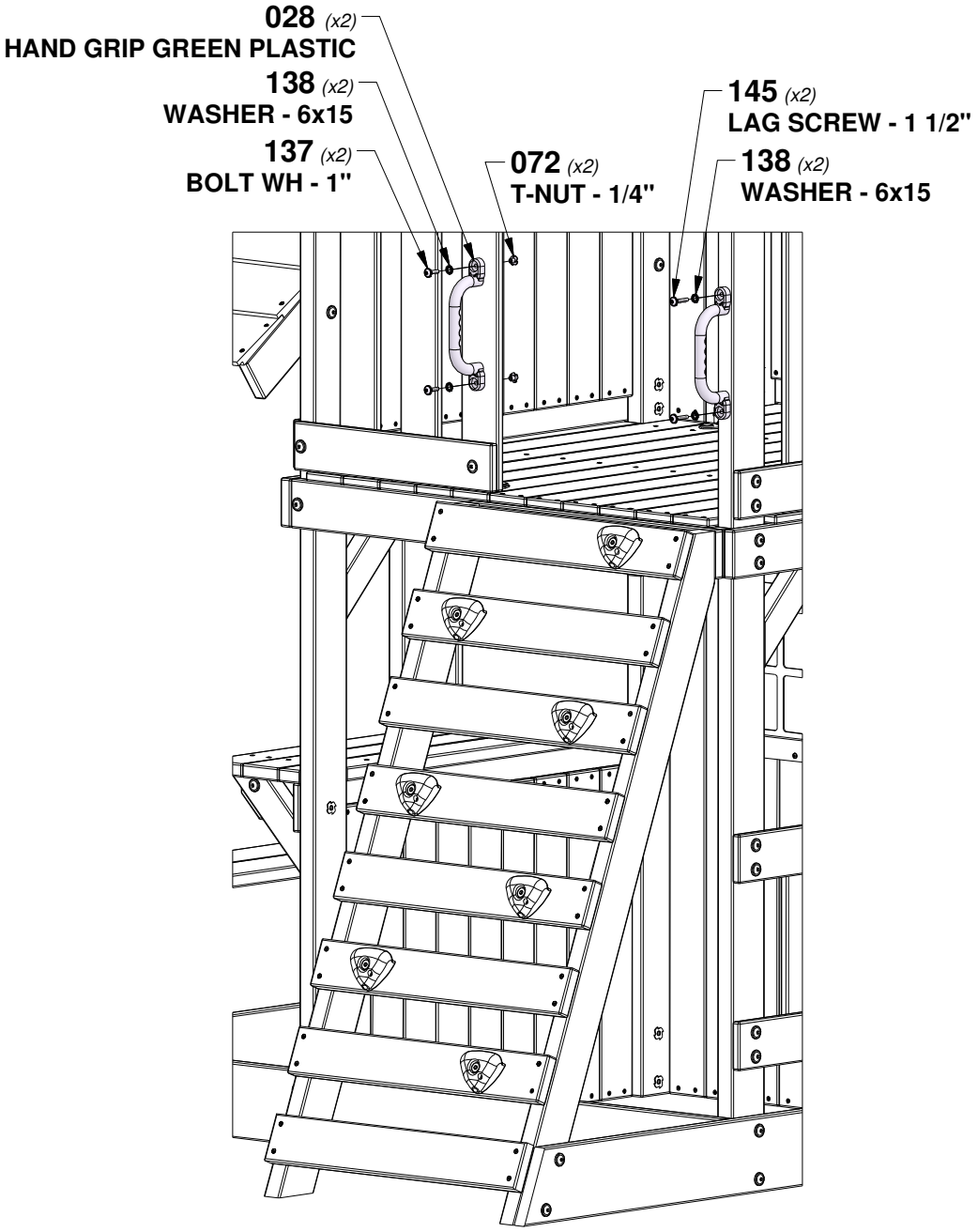

STEP 1 - FINAL ASSEMBLY

QTY	PART NUMBER	DESCRIPTION
3	H100074	T-NUT 5/16
3	H100115	BOLT WH 5/16x1/2

TIP:
INSTALL T-NUTS IN WOOD FIRST

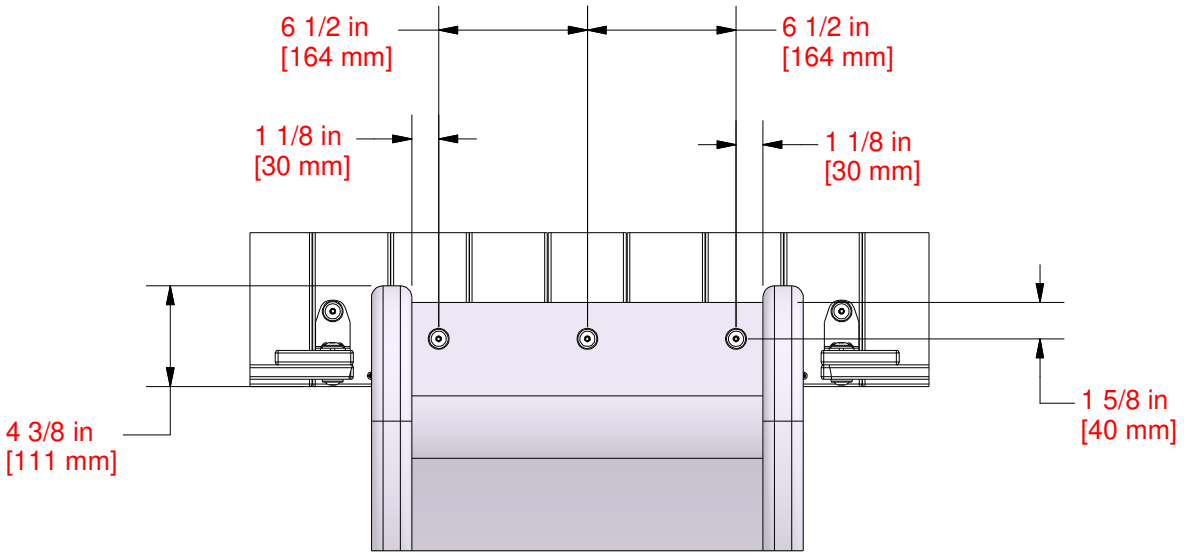

NOTE:
CENTER SLIDE IN OPENING. USING DIMENSIONS ABOVE AS A TEMPLATE, DRILL (3) 3/8" [10mm] HOLES THROUGH DECK FOR HARDWARE.

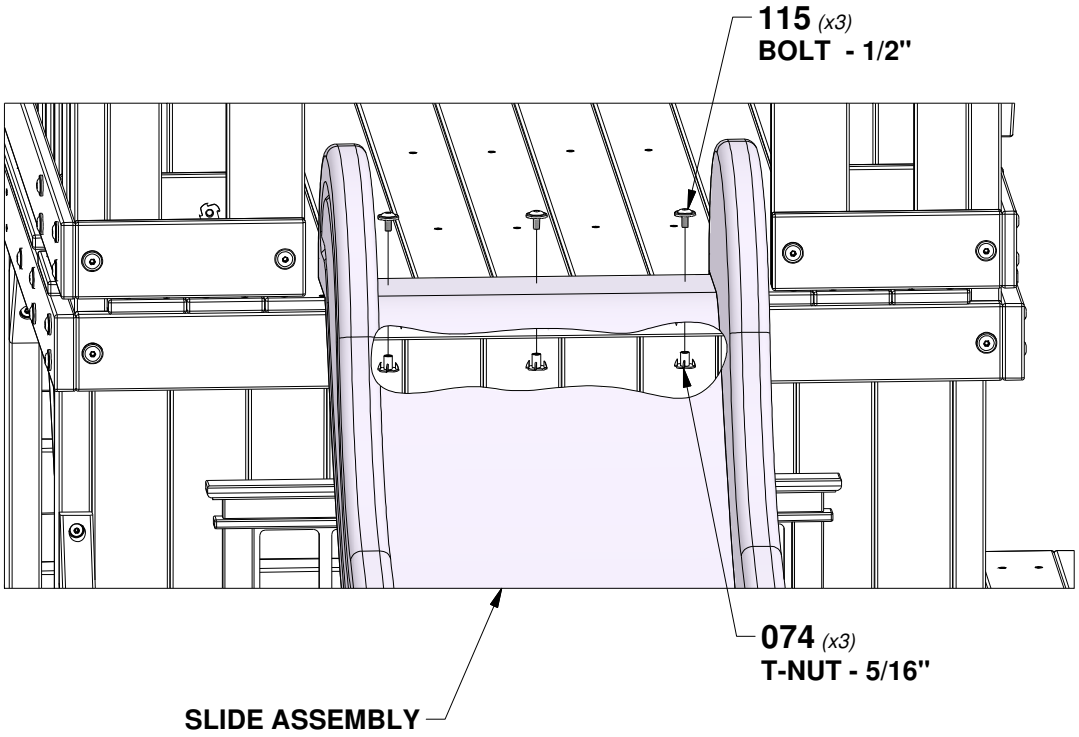

STEP 2 - FINAL ASSEMBLY

QTY	PART NUMBER	DESCRIPTION
4	H100042	BOLT HEX 5/16x1 1/4
4	H100095	WASHER SPLIT 5/16
4	H100105	WASHER FLAT 8x27

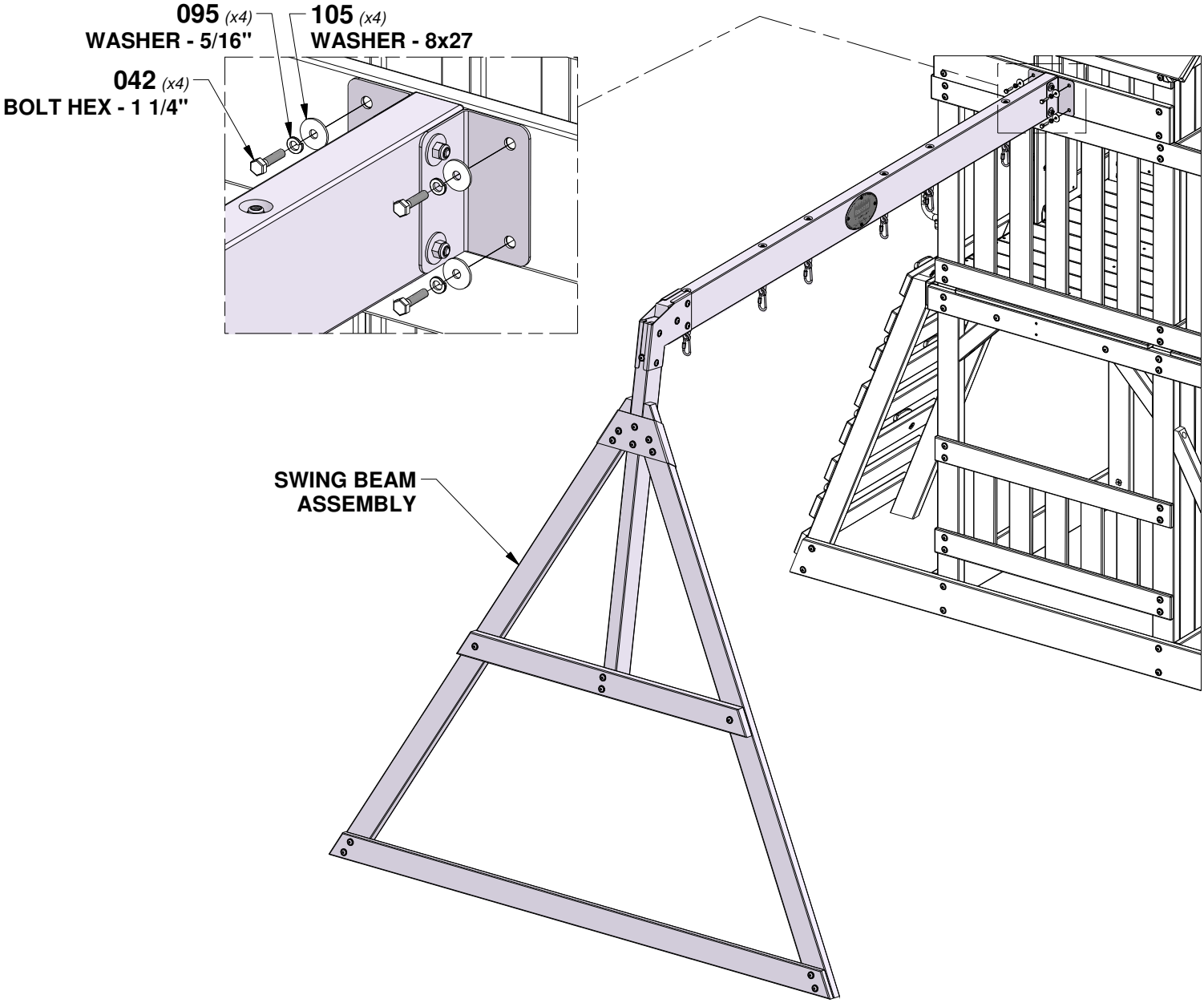

STEP 3 - FINAL ASSEMBLY

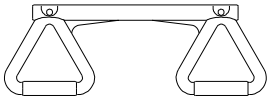

A6P00034 *(x1)* | TRAPEZE YELLOW

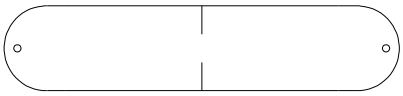

A100027 *(x2)* | SWING SEAT GREEN 26"

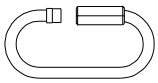

A100069 *(x6)* | QUICK LINK

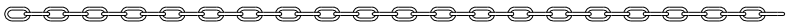

A100068 *(x4)* | CHAIN GREEN 51.25"

A100177 *(x2)* | CHAIN GREEN 31"

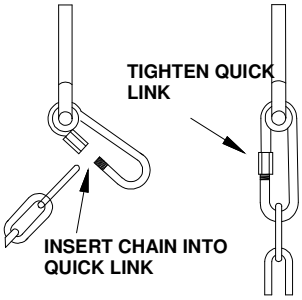

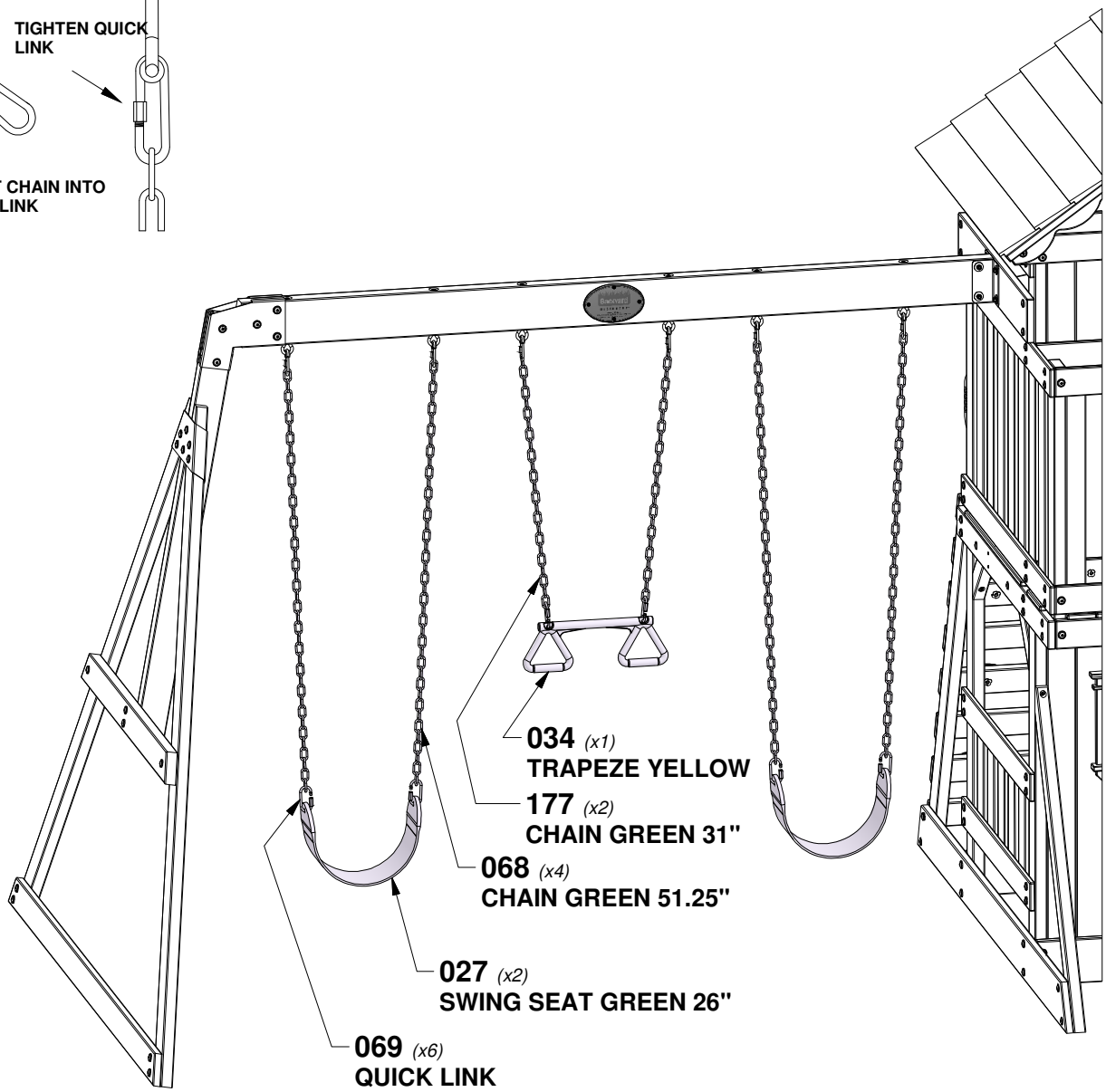

STEP 4 - FINAL ASSEMBLY

QTY	PART NUMBER	DESCRIPTION
6	H100009	BOLT WH 5/16x1 1/4
6	H100074	T-NUT 5/16

A100178 *(x6)* | AUGER GROUND STAKE

TIP:
INSTALL T-NUTS IN WOOD FIRST

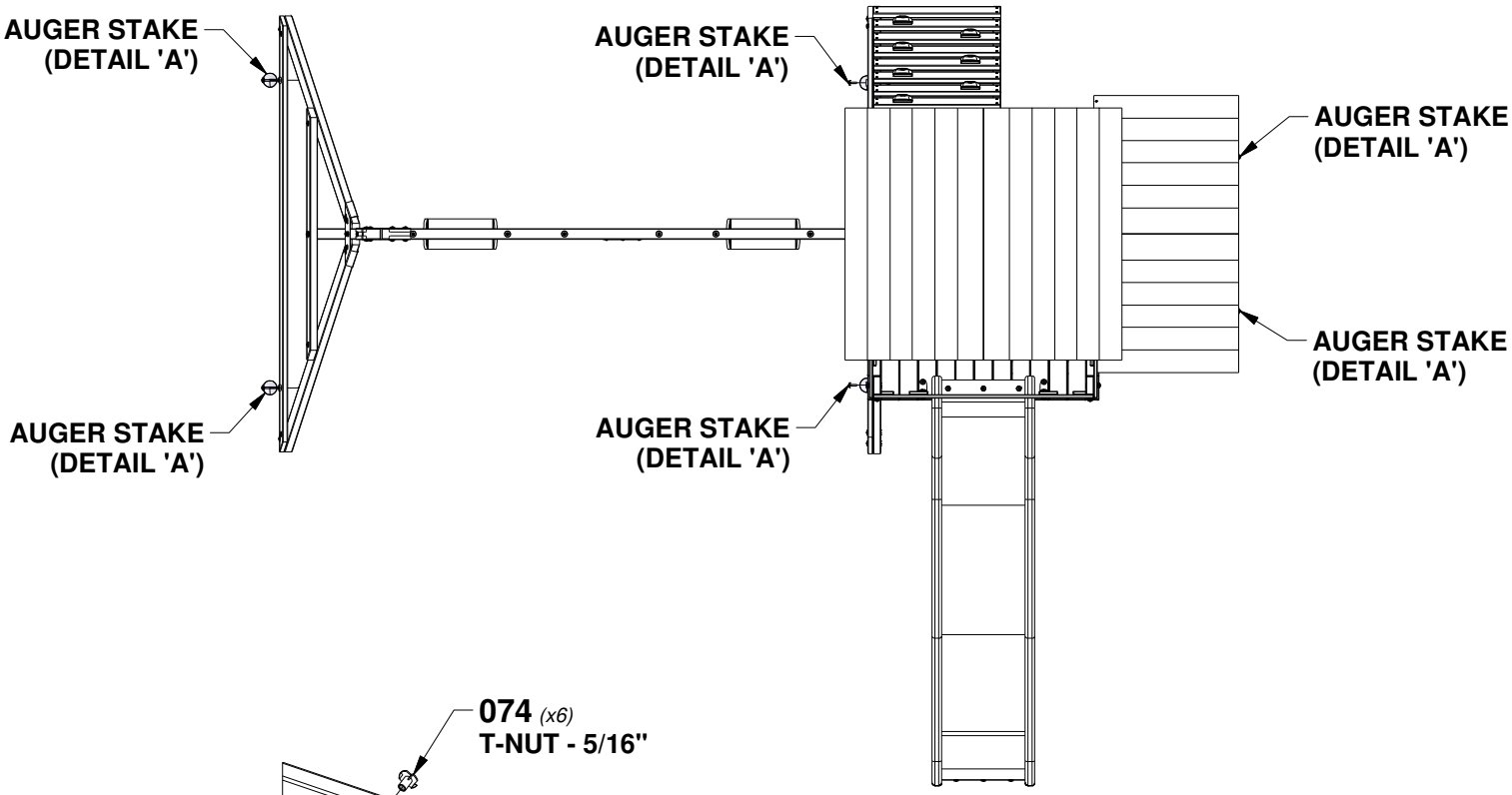

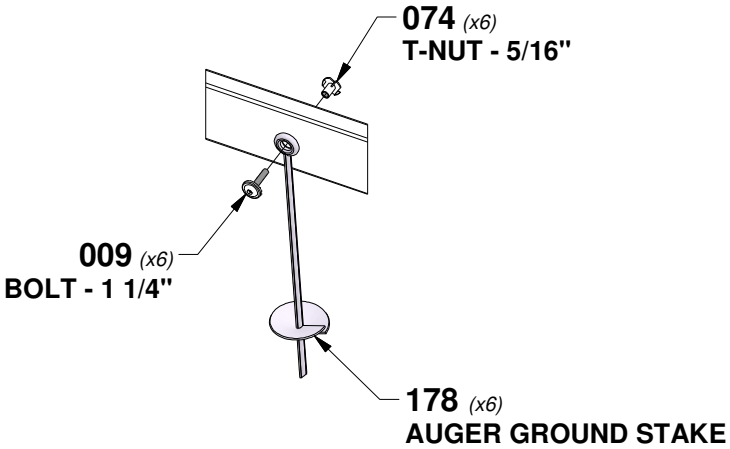

DETAIL 'A'

TWIST GROUND STAKE INTO GROUND AT LOCATIONS SHOWN. USING AUGER STAKE AS A GUIDE, DRILL A 7/16" [10mm] HOLE FOR HARDWARE.