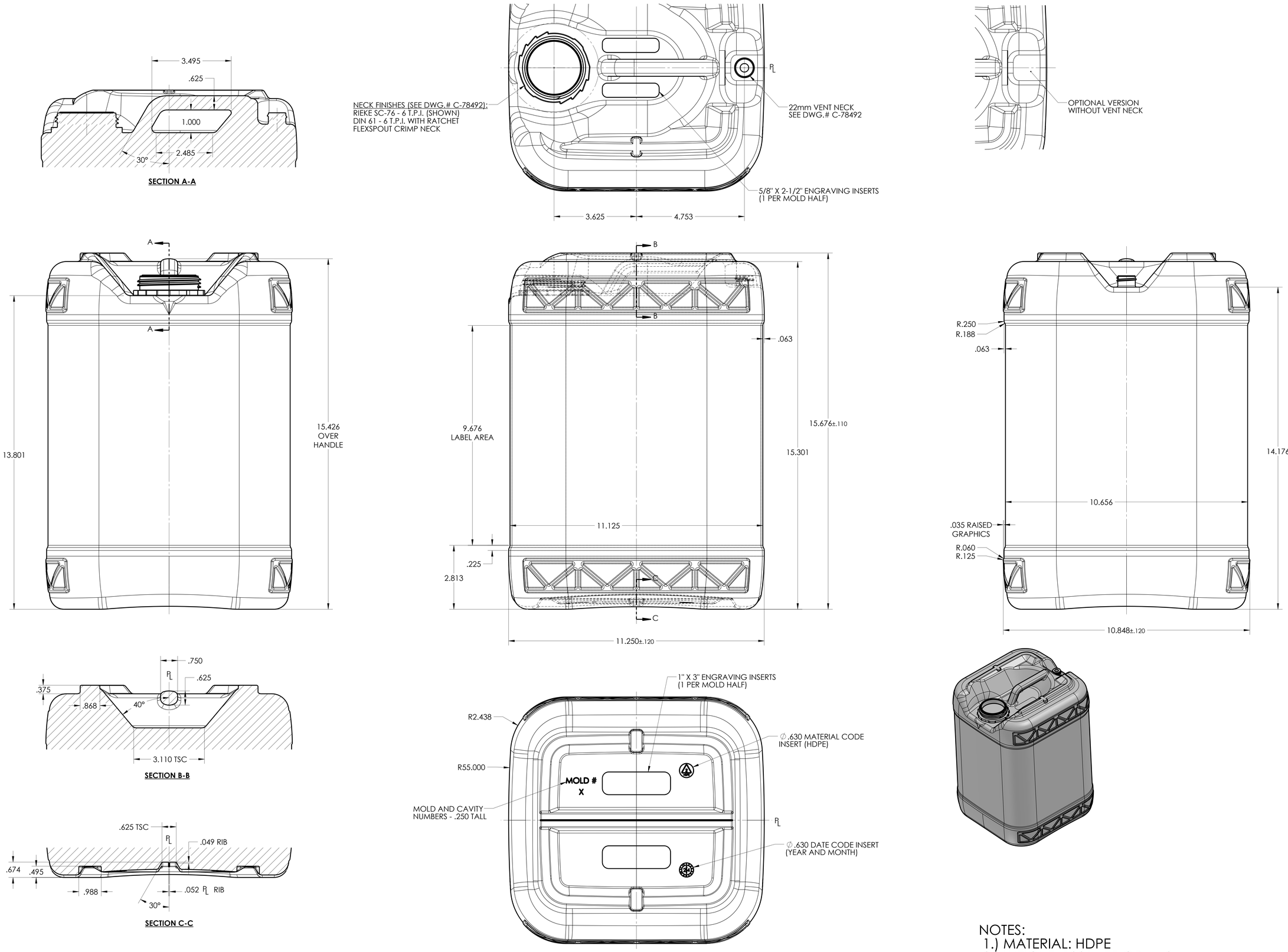

NOTES:
1.) MATERIAL: HDPE
2.) WEIGHT: 1081 ±55 GRAMS
3.) OVERFLOW CAPACITY: 6.39 ±0 .064 GALLONS [24,192 ±242cc] (WITHOUT VENT NECK). HEAD SPACE: 6.5%.
4.) OVERFLOW CAPACITY DOES NOT INCLUDE ANY ADDITIONAL VOLUME DUE TO PANEL BULGE

DISCLAIMER

THIS INFORMATION IS PROVIDED AS A GENERAL GUIDE, INCLUDING DIMENSIONS. IT IS THE CUSTOMER'S RESPONSIBILITIES TO SELECT THE PROPER CONTAINER FOR PRODUCT AND APPLICATION COMPATIBILITY.

DISTRIBUTED BY: Pipeline Packaging

REF NO.: DWG40005

DESCRIPTION:

6 Gallon HDPE Tighthead, 1081 grams

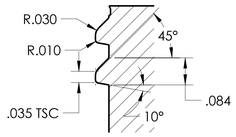

SECTION D-D
SCALE 4 : 1

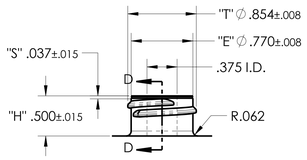

22mm VENT NECK
8 THREADS PER INCH
1-1/8 FULL TURNS OF THREAD

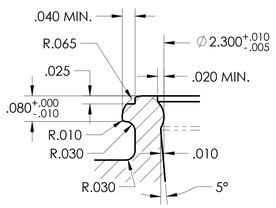

SECTION C-C
SCALE 4 : 1

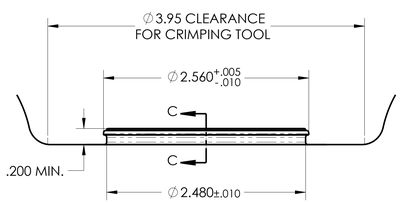

FLEXSPOUT NECK FINISH
(REF. DWG.# 18000338 REV.C)

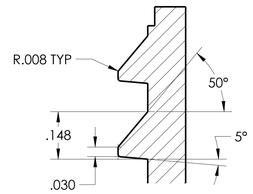

SECTION B-B
SCALE 4 : 1

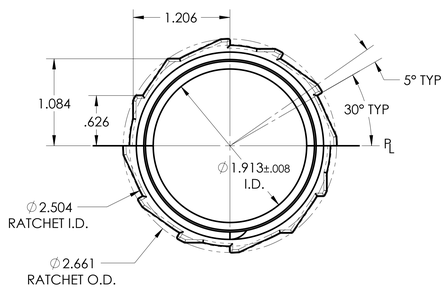

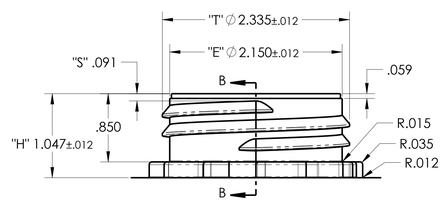

DIN 61 NECK FINISH
(REF. DWG.# 1P161-COLLO)
6mm THREAD PITCH
2 FULL TURNS OF THREAD

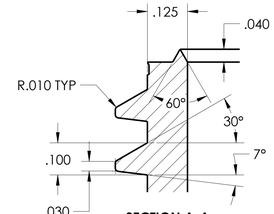

SECTION A-A
SCALE 4 : 1

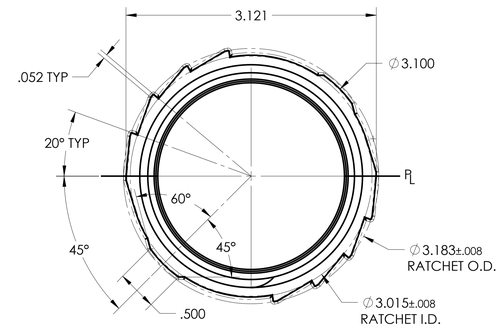

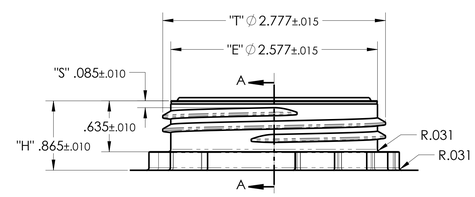

RIEKE SC-76 NECK FINISH
(REF. DWG.# 18005352 REV.D)
6 THREADS PER INCH
2 FULL TURNS OF THREAD

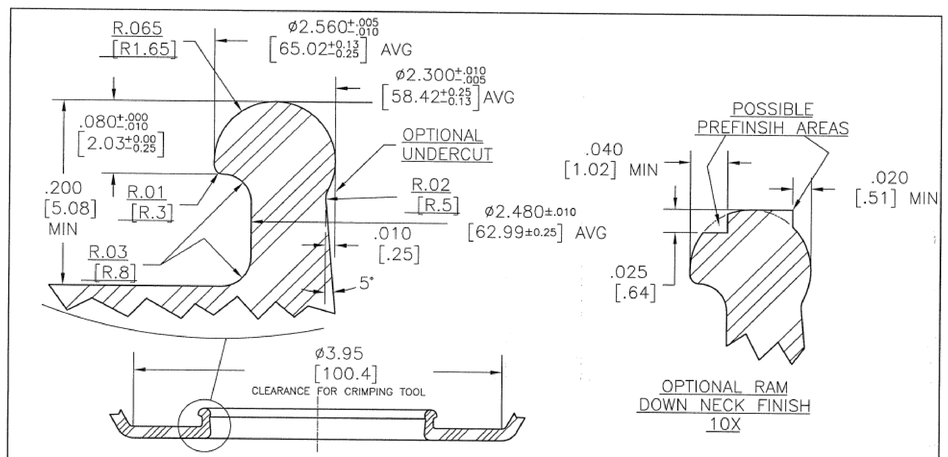

NOTES:
1) EITHER I.D.(2.300 [58.42]) OR O.D.(2.560 [65.02]) MUST BE FREE OF IMPERFECTIONS, PART LINES, FLASH AND SINKS FOR COMPLETE 360° GIVING AN UNINTERUPTED SEALING SURFACE.
2) MAXIMUM OVALITY ~ .040 [1.02]

BREAK ALL SHARP EDGES WITH 1/64" RADIUS, UNLESS OTHERWISE SPECIFIED		DATE 7-22-91	DRAWN BY BJM				
THE FOLLOWING TOLERANCES APPLY UNLESS OTHERWISE SPECIFIED:			CHECKED J.HESS				
ANGLES	±1/4°	SCALE NTS	APPROVED	C	1) ADD METRIC DIMENSIONS	06-04-13	JLH
HUNDRETH	±.015			B	REDRAWN IN CAD	7-22-91	BJM
THOUSANDTH	±.002			CHANGE NUMBER	CHANGE	DATE	BY

Rieke® Corporation — Auburn, Indiana

DETAIL NAME	FLEXSPOUT NECK FINISH		
TOOL ASSY. NAME	FOR PLASTIC CONTAINER		
PRODUCT		TOOL ASS'Y NUMBER	
DRAWING NUMBER	18000338		
FOR		DETAIL NUMBER	
MATERIAL	TEMPER	M0531-02	

DISCLAIMER

THIS INFORMATION IS PROVIDED AS A GENERAL GUIDE, INCLUDING DIMENSIONS. IT IS THE CUSTOMER'S RESPONSIBILITIES TO SELECT THE PROPER CONTAINER FOR PRODUCT AND APPLICATION COMPATIBILITY.

DISTRIBUTED BY: Pipeline Packaging

REF NO.: DWG40002

DESCRIPTION:

20 Liter HDPE Tighthead, 1000 grams