INSTALL & CARE GUIDE

APPLICABLE FOR ALL ANZZI
FREESTANDING SOAKER BATHTUB
V1.2

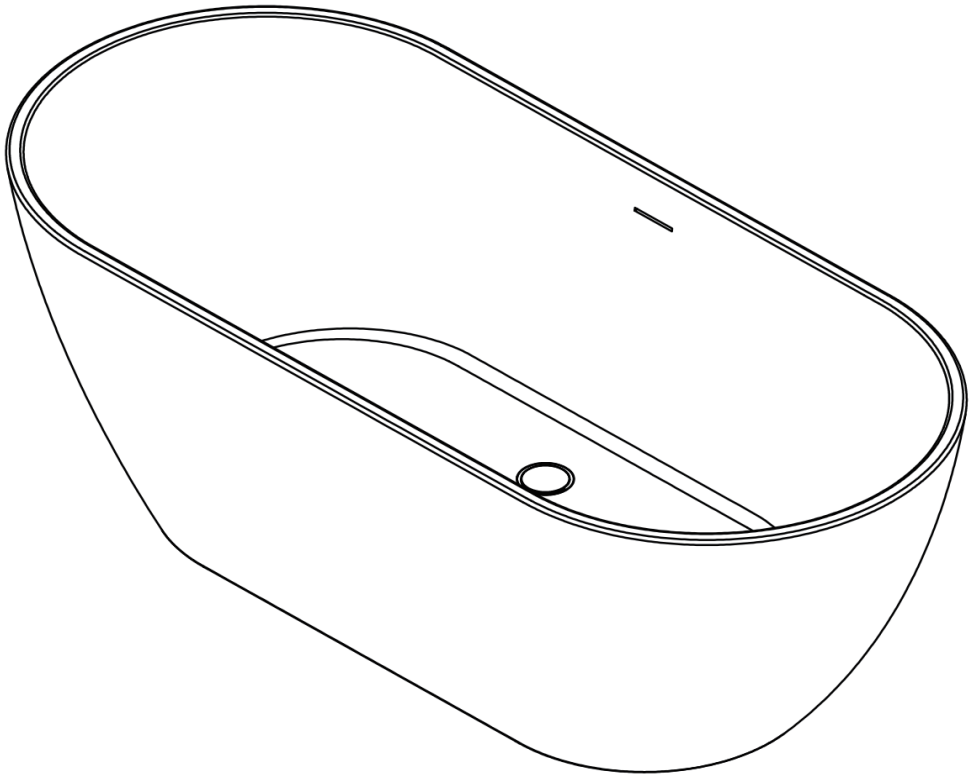

DON'T WAIT!
REGISTER NOW!

Register your product within 90 days to ensure it is recognized as a purchase and covered under warranty.
Register online at https://anzzi.com/pages/register or scan the QR code on PG.2.

V 1.2-This version supersedes all previous versions as of 08/14/2026

PRODUCT REGISTRATION*

IMPORTANT: Warranty will not be recognized unless product is registered.

Register online at https://anzzi.com/pages/register or Scan the QR code below.
Registering your product maximizes your warranty benefits and ensures prompt service and support.

1 USE YOUR PHONE CAMERA TO SCAN THE QR CODE

2 FILL IN A QUICK REGISTRATION FORM

3 CLICK SUBMIT AND ENJOY PEACE OF MIND

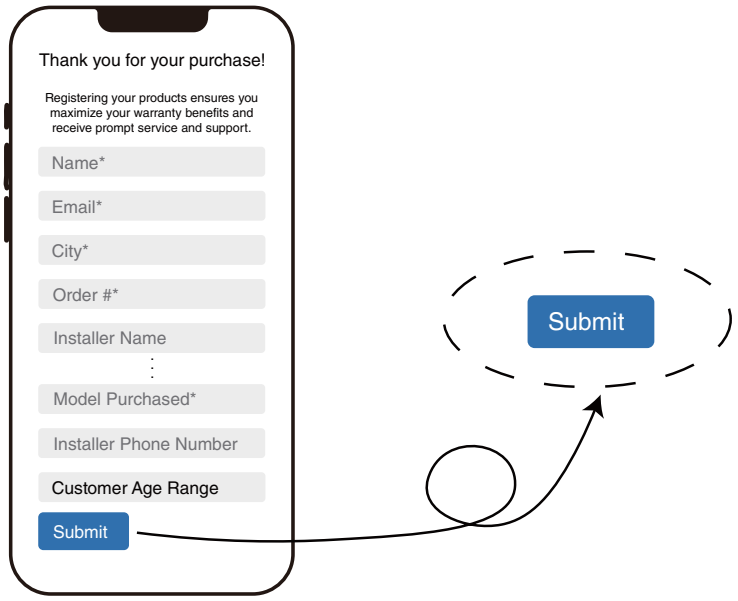

Need help? For technical support call 305-363-4679 or visit us at www.ANZZI.com

ANZZI®

Item: FT-AZ903-67

FREESTANDING BATHTUB

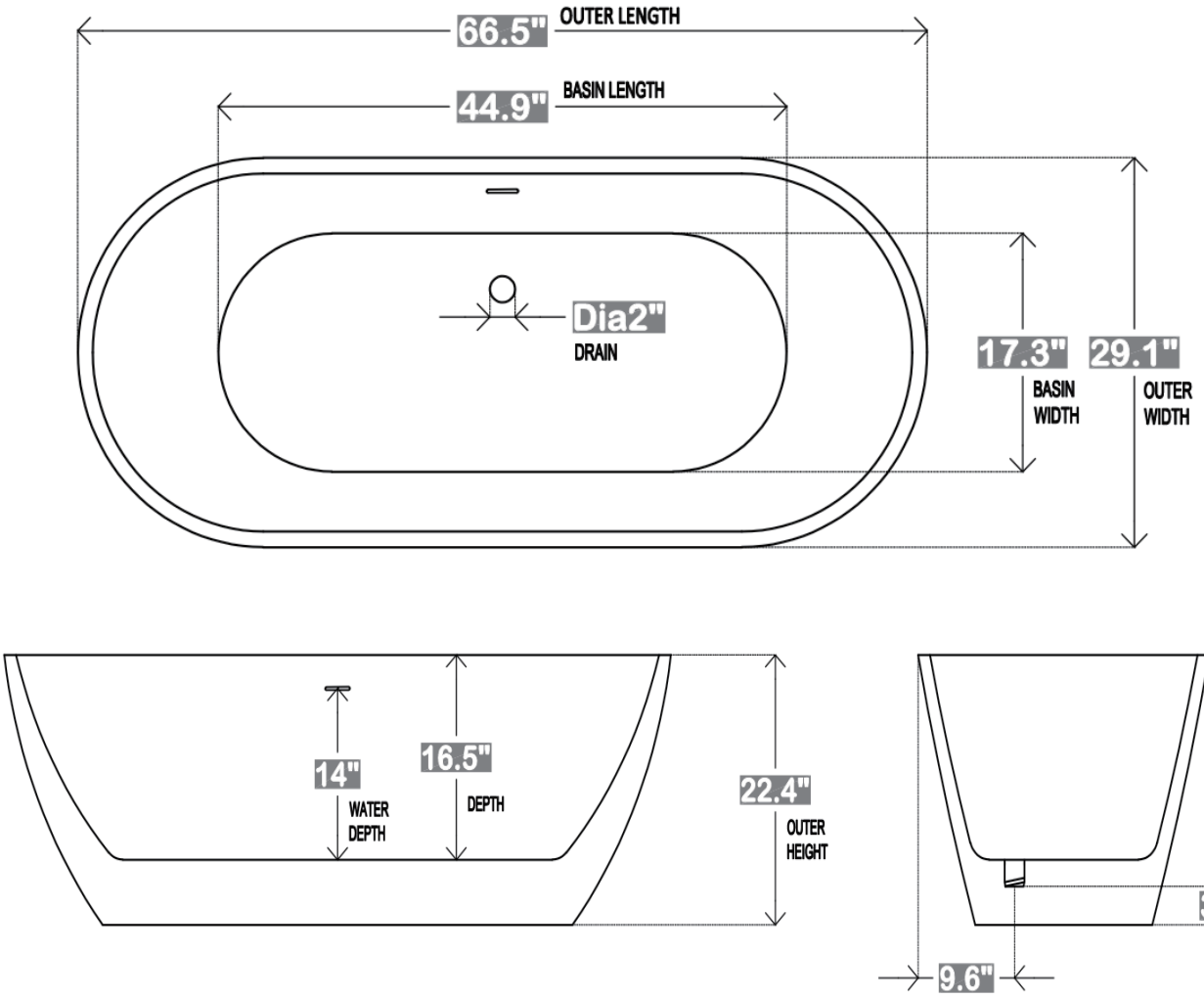

ANZZI®

SAFETY INSTRUCTIONS

IMPORTANT SAFETY INSTRUCTIONS. INSTRUCTIONS IMPORTANTES RELATIVES A LA SECURITE.

READ AND FOLLOW ALL INSTRUCTIONS. LIRE ET SUIVRE TOUTES LES INSTRUCTIONS.

SAVE THESE INSTRUCTIONS. CONSERVER CES INSTRUCTIONS.

SAVE THIS MANUAL!

READ THESE INSTRUCTIONS COMPLETELY BEFORE INSTALLING THE PRODUCT. FAILURE TO DO SO COULD RESULT IN AN IMPROPER INSTALLATION AND COULD VOID THE WARRANTY.

RESPONSIBILITY OF THE INSTALLER!
THE INSTALLER MUST INSPECT AND WATER TEST THE PRODUCT PRIOR TO INSTALLATION TO ENSURE THE UNIT IS FREE OF DEFECT OR DAMAGE. IN THE EVENT OF A PROBLEM, THE UNIT MUST NOT BE INSTALLED. IF THE CRATE OR THE PRODUCT HAS BEEN DAMAGED DURING SHIPPING, PLEASE CALL US IMMEDIATELY.

THIS PRODUCT MUST BE INSTALLED BY A LICENSED/CERTIFIED CONTRACTOR!
LICENSED PLUMBERS SHOULD BE EMPLOYED TO INSURE PROPER INSTALLATION. INSTALLERS ASSUME ALL LIABILITY FOR THE CORRECT INSTALLATION PROCEDURES. ONLY ACCESSORIES AUTHORIZED BY THE MANUFACTURER SHOULD BE USED WITH THIS PRODUCT.

REPORT DAMAGES RIGHT AWAY! REPORT ANY DAMAGE TO THE BATHTUB WITHIN 5 BUSINESS DAYS. ANY DAMAGE DONE BEYOND THAT WILL BE ASSUMED TO HAVE HAPPENED DURING OR AFTER THE INSTALLATION.

TEST THE TUB BEFORE INSTALLATION! BEFORE PERMANENTLY INSTALLING THE BATHTUB, YOUR INSTALLER MUST TEST THE TUB. USE THE PROVIDED FLEX DRAIN. FILL TUB AND INSPECT FOR ANY LEAKING.
ONLY IF THERE ARE NO SIGNS OF LEAKAGE , YOU SHOULD PROCEED TO PERMANENTLY INSTALL THE UNIT.

LEVEL THE TUB AND AVOID LEAKAGE! CHECK THE AREA PRIOR TO INSTALLATION. USE THE TUB'S ADJUSTABLE FEET TO ENSURE THE BATHTUB IS PERFECTLY LEVEL. IT IS ESSENTIAL THAT ALL THE FEET ARE TOUCHING THE FLOOR/SURFACE. AN UNLEVELED TUB WILL RESULT IN LEAKAGE.

UNPACK THE BATHTUB

REMOVE THE BATHTUB FROM THE BOX AND PREPARE THE FOLLOWING TOOLS.

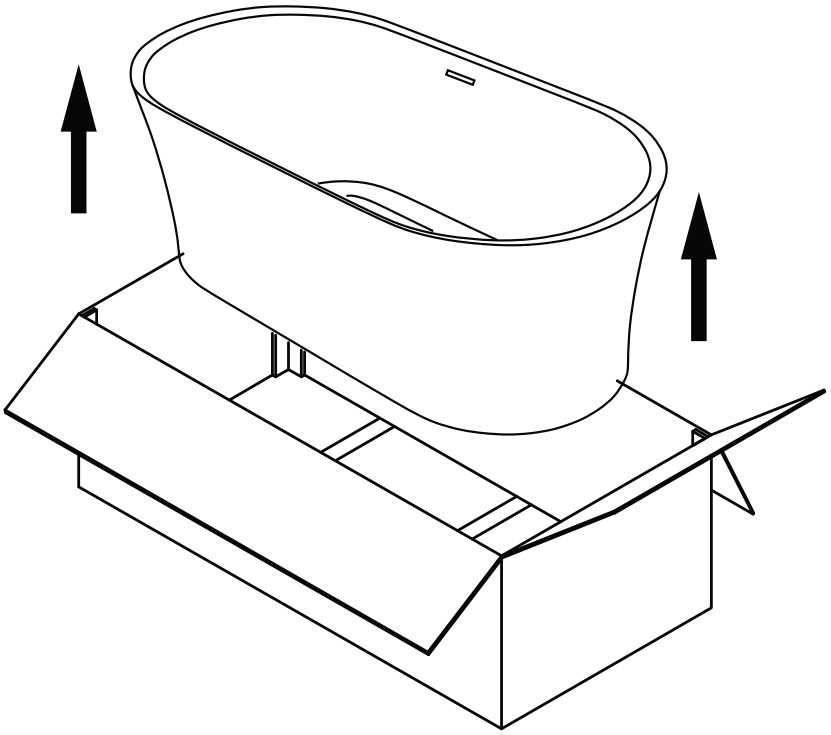

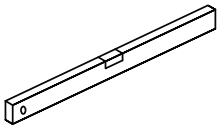

LEVEL

needed



ADJUSTABLE WRENCH
needed

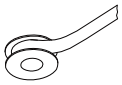

TEFLON TAPE
needed



FLEXIBLE DRAIN
included,
for testing only

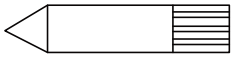

MARKING PENCIL
needed

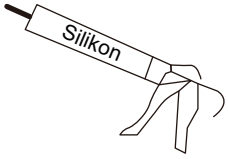

SICILONE GUN
needed

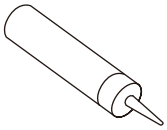

CAULK

needed

NOTE: THE INCLUDED FLEXIBLE DRAIN IS TO BE USED ONLY TO TEST THE BATHTUB BEFORE PERMANENT INSTALLATION. IT IS THE RESPONSIBILITY OF THE INSTALLER TO PROVIDE THE PERMANENT DRAIN ASSEMBLY.

ANZZI®

** All bathtubs are 100% water tested at the factory and certified to be free of leaks Transportation and mishandling may cause leaks.It is necessary to test the bathtub while there is access to all sides of the bathtub.*

TEST THE BATHTUB WHILE YOU HAVE ACCESS TO THE BOTTOM AND BEFORE PERMANENTLY INSTALLED.

READ AND FOLLOW ALL INSTRUCTIONS

- Place the tub on a completely flat surface in an area where it may be drained after testing.
- Close the drain and fill the tub about half way.
- Allow the water to stand in tub for 30 minutes and then inspect all plumbing and seals for leaks.

INSTALLING THE BATHTUB

MOVE THE BATHTUB TO THE SELECTED INSTALLATION POSITION, (MAKE SURE THAT THE FLOOR SURFACE CAN SUPPORT THE LOAD CAPACITY), AND PLACE IT IN THE PROPER (OR DESIRED) ORIENTATION. THEN USE A LEVEL TO ENSURE THE TUB SURFACE IS LEVEL. IF NOT, LIFT ONE END OF THE BATHTUB, AND LOOSEN THE ADJUSTING NUT ON THE TUB FOOT AS SHOWN IN THE FIGURE. AFTER ADJUSTING THE LEVELING FOOT TO A SUITABLE POSITION, THEN TIGHTEN SECURING NUT.

WARNING: MAKE SURE THE TUB IS PERFECTLY LEVEL TO PREVENT LEAKAGE. USE THE ADJUSTABLE LEVELING FEET TO ENSURE A LEVEL TUB. ALL LEVELING FEET MUST MAKE CONTACT WITH THE FLOOR / SURFACE.

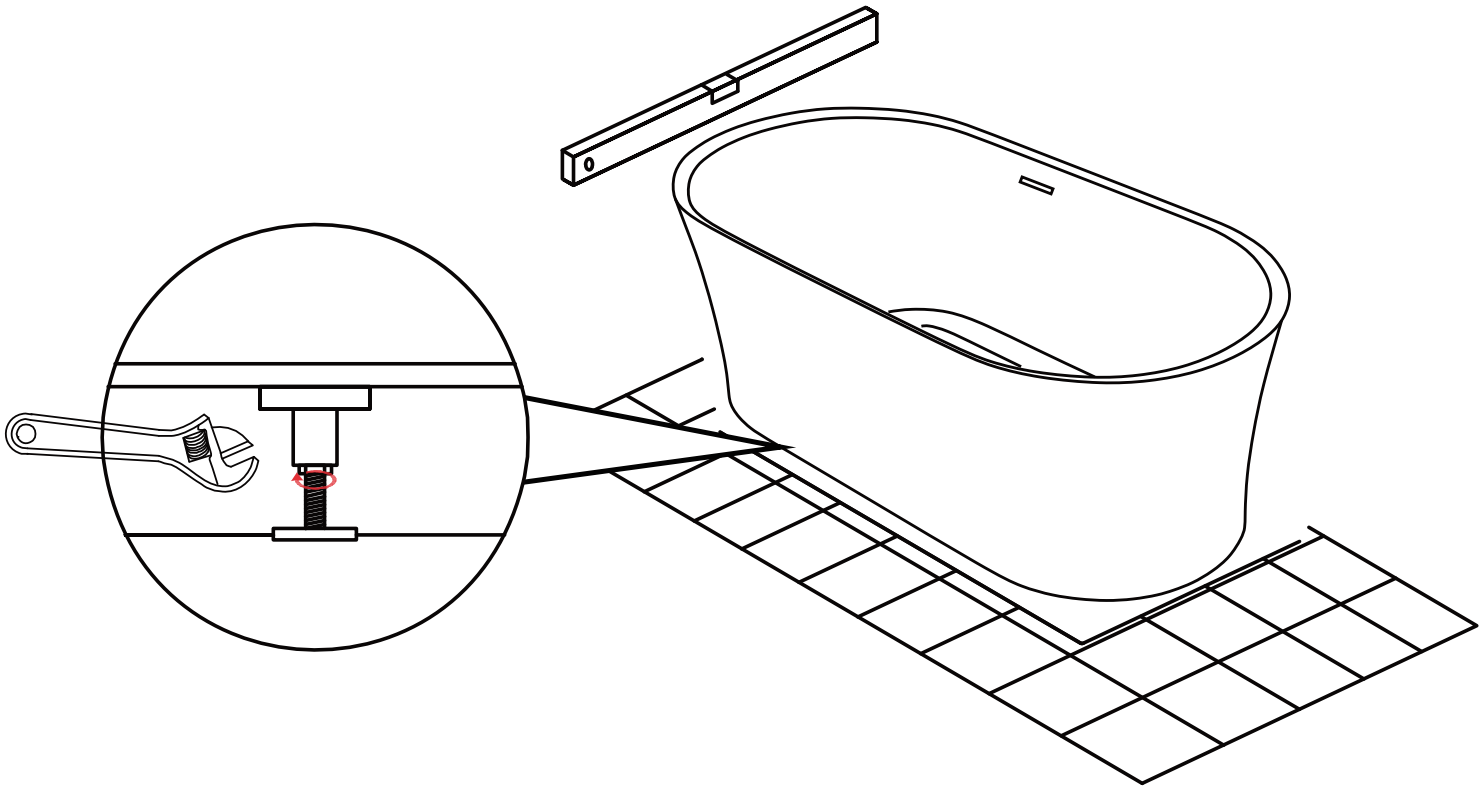

Have questions? Call us at 305-363-4679 or visit us at www.ANZZI.com

ANZZI®

SEAL TUB

ADD A BEAD OF SILICONE AROUND THE BASE OF THE BATHTUB AND ALLOW 24 HOURS TO PASS BEFORE USE TO ENSURE THE SILICONE HAS SET.

FILL THE BATHTUB

FINALLY FILL THE BATHTUB WITH WATER.

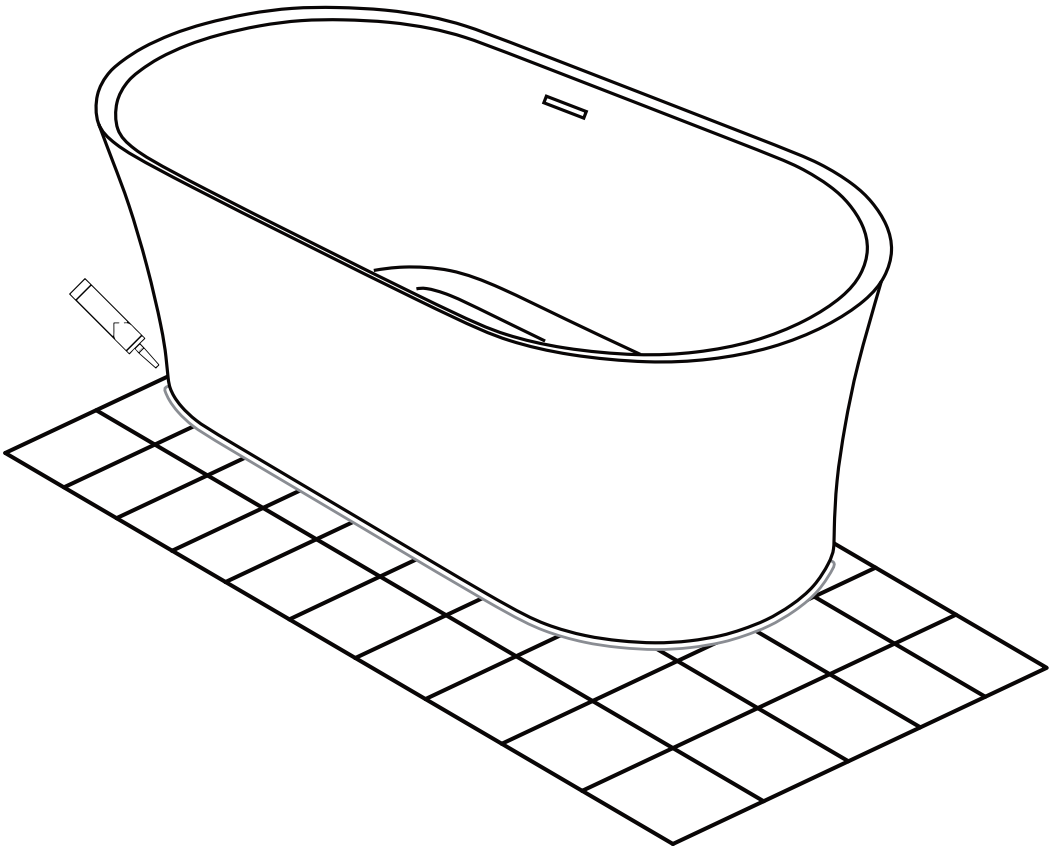

Have questions? Call us at 305-363-4679 or visit us at www.ANZZI.com

CLEANING AND MAINTENANCE

1. To preserve the polished surface, after using your tub, clean with soft cloth and warm soapy water to wash away any body oils or soap residue that forms a ring tide mark.

2. Do not use powders, pastes, crème cleaners, thinners, window cleaning sprays or dry cleaning liquid, etc to clean the tub.

3. For overflow plate and pop up drain, we do NOT recommend you use any household cleaners to clean the product. Aggressive chemicals can damage the finish and function of this product. The product should only be cleaned with soapy water and rinsed with clean water and dried with a soft cloth.

4. When coloured essentials oils are used, first test that the colour won't stain your tub. Always add oils into a tub full of water. Never pour them into an empty tub.