KINGSTON

Tub Spout
Installation Instructions

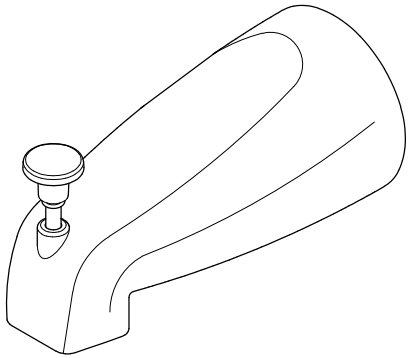

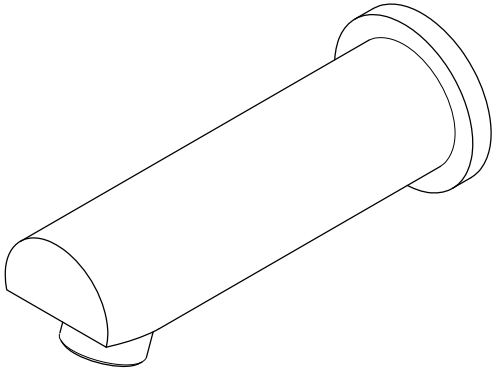

NOTICE

Failure to follow all directions may cause leaks which may result in water damage

www.kingstonbrass.com

TOLL-FREE CUSTOMER SERVICE: 1-877-2-KBRASS
TECHNICAL SUPPORT E-mail: service@kingstonbrass.com
12775 Reservoir Street, Chino, CA 91710

TOOLS REQUIRED

 Teflon Tape

 Silicone Sealant

Installation Instruction:

Remover bushing (part A) from spout.

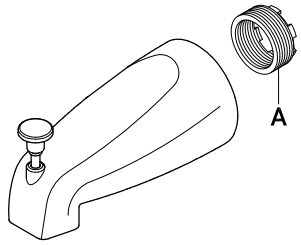

For 1/2 IPS pipe:

Step 1. Wrap Teflon tape on pipe.
(Considering the different Teflon tapes are with different thickness, please wrap Teflon tape at least 6 cycles. It would be better to wrap more than 6 cycles.)

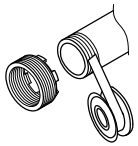

Step 2. Thread bushing onto pipe.
Step 3. Wrap Teflon tape on bushing and thread spout onto bushing.
Adjusting to make sure the spout is facing down.

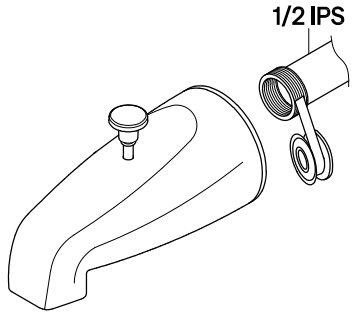

For 3/4 IPS pipe:

Step 1. Wrap Teflon tape on pipe.
(Considering the different Teflon tapes are with different thickness, please wrap Teflon tape at least 6 cycles. It would be better to wrap more than 6 cycles.)

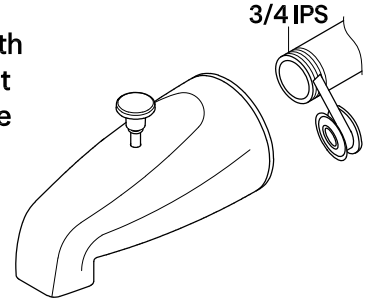

Step 2. Thread spout onto pipe.
Adjusting to make sure the spout is facing down.

©2025 LVC Kingston LLC. All Rights Reserved.

2025-05-D