Experts in water.

DAVEY

APPLICATIONS

Ideal for pumping clean, clear water in such applications as:-

- Homes where the incoming municipal water supply pressure is inadequate
- From underground or surface water supplies
- Automatic water transfer
- Applications where the pump may have an interrupted water supply
- Domestic and light industrial irrigation

Davey® BT with Torrium®2

Home Pressure System

Model Numbers:

BT14-30, BT20-30, BT14-45, BT20-40 & BT30-30

The Davey mains water BT Series pressure boosting system comprises of a robust, compact, centrifugal pump with an intelligent Torrium®2 water pressure controller to supply pressure boosted water with constant flow and even pressure to domestic households. The Torrium®2 incorporates multiple levels of pump and motor protection.

WHY CHOOSE THE DAVEY BT Home Pressure System?

WATER PRESSURE SYSTEM

The Davey BT booster pressure system consists of a robust centrifugal pump fitted with the intelligent Davey Torrium®2 water pressure controller to deliver boosted water pressure to your home or other application. Consumers can enjoy strong and seemingly constant water pressure due to Torrium®2's constant flow operation.

Due to large water pathways, Torrium®2 operates with a lower head loss than comparable water pressure controllers to provide superior hydraulic performance with less wasted energy.

TORRIUM®2 CONTROLLER

Pressure Boosting

Torrium®2 boosts low or fluctuating mains water pressure to give you strong, even water pressure for your comfort and convenience. Torrium®2 can also pressure boost water from rainwater tanks.

Constant Flow and Even Water Pressure

To prevent annoying fluctuations in water temperature during showers, Torrium®2 uses its intelligence to provide households with constant flow to provide even water pressure. It does this with its innovative pressure and flow sensors to start the pump on a pressure drop and to stop it on low flow (~0.26 gpm). This avoids pump cycling when there is continuing household demand for water.

Quick Cut-in for Even Pressure

To give you strong pressure right from the start, Torrium®2 is designed to cut in quickly when it senses demand for water. It cuts in when the pressure has dropped to 80% of the previous top (shut-off) pressure. Torrium®2 automatically sets this cut-in pressure each time the pump stops. In doing so, Torrium®2 automatically adapts to variations in pump performance or site conditions.

cont. overleaf

australian owned

Adaptive Starting
Torrium®2 is smart enough to detect the difference between normal water demand and a small leak in the system, such as a dripping faucet or a leaking cistern. For very low flows, Torrium®2 automatically adapts to reduce the cut-in pressure, which can be as low as 50% of its last shut-off pressure. This significantly reduces pump cycling to improve consumer satisfaction with the system. If normal flow is required in the house (>0.13gpm), Torrium®2 will sense this and revert to normal mode and initiate an immediate pump start.

Easy Status Check
To easily check the system status, Torrium®2 has three simple LED indicators.
- Red LED - the system is in standby
- Green LED - the pump is running
- Yellow LED – fault condition

Pressure Indicator Window
To give a quick guide to the system pressure, Torrium®2 has a pressure indicator window on the side of the built-in pressure vessel. If the color band (green-amber-red) is mainly green it indicates maximum pressure, whereas mainly red indicates low pressure. This indicator can help to analyze the occurrence of unwanted system leaks. If the color band indicator is moving slowly towards red this signifies a slow drop in pressure and may indicate a small leak.

Greater Hydraulic Performance
To provide more pressure while using less energy, Torrium®2 has been designed with larger water pathways to provide low head loss, offering superior hydraulic performance than comparable water pressure controllers.

Greater Reliability
To diminish the likelihood of blockages, Torrium®2 is designed with no moving control parts within the water pathways giving greater reliability and performance with varying water quality.

Dry Run Protection & Auto Restart
To protect the pump from damage due to dry running, Torrium®2 stops the pump when it detects a loss of prime (no water supply) situation. To reduce system downtime, the Torrium®2 waits 5 minutes then goes into auto retry mode, whereby it will restart the pump to see if prime can be re-established automatically. An auto restart occurs at 5 minutes, 30 minutes, 1 hour, 2, 4, 8, 16 and 32 hours. Torrium®2 will also restart if it detects flow through the system (e.g. from mains water pressure returning with pressure boosting applications).

Pump Protection – High Water Temperature Cut-out
For added security and longer life, a water over-temperature cut-out provides a second level of protection against closed head operation and repetitive cycling. For water temperatures above 158°F Torrium®2 will shut the pump down and the amber LED will be lit. When the water temperature drops to below 140°F, the Torrium®2 will allow the pump to restart.

Pump Protection – Excessive Electrical Current
To protect the pump motor, Torrium®2 will shut the pump down and indicate a fault if it detects excessive electrical current being drawn. This occurs if the pump motor is subjected to locked rotor or if someone tries to manually override the Torrium®2 by continually holding in the prime button.

Corrosion & Scale Resistance
To allow Torrium®2 to be used with water of varying quality, its flow sensors are mounted on a high grade stainless steel plate with special anti-scaling electronic action, which only turns the flow sensors on during pump operation.

Extra Draw off Capacity
To accommodate small leaks and to reduce cycling, Torrium®2 has an in-built spring loaded accumulator for extra draw off capacity. A spring loaded accumulator means low maintenance as there is no need for a pressure vessel with its regular air charging and checking. However, for increased draw off, an optional small pressure tank, can be mounted on the vertical outlet.

Power Surge Protection for Torrium®2
To protect the Torrium®2 controller from electrical surges and spikes, thus extending its life, it incorporates a metal oxide varistor (MOV). The status of the MOV can be checked in the viewing window on the back of the Torrium®2. The MOV is a sacrificial component and should it be consumed due to repeated power surges or spikes, it will almost always blacken the viewing port. This will indicate a non-warrantable Torrium®2 failure.

Ease of Installation
For ease of installation, the outlet plumbing can be connected to either the vertical or the right angle discharge outlet, which can rotate a full 360°. A wrench, sized to fit the coupling, is included in the box.

Power Cable
For easy installation, no hard wiring is needed as Torrium®2 comes with a 6 foot power cord with a standard NEMA power plug. USA 120V models are fitted with a standard NEMA 5-15P power plug. USA 240V models are fitted with a standard NEMA 6-15P power plug.

PUMP
- Reliable single stage or multistage impeller design (dependent upon pump model)
- All stainless steel construction for reliability and the ability to pump hot water up to 176°F
- Carbon/Ceramic mechanical seal for reliable pump operation

MOTOR
- 120/240V, 60Hz, 2 pole (dependant upon pump model)
- Class F insulation
- Higher than normal 130°F ambient temperature rating for longer life and improved tolerance to voltage variations for peace of mind, even on the hottest days.
- Robust TEFC motor constructed from corrosion resistant materials
- IP55 international protection rating for a high level of resistance to dust and dirt entry
- Protected against both high operating temperature and high current draw by a built-in, automatically re-setting, thermal overload
- Permanently split capacitor for reliable starting even in low voltage circumstances
- Motor and pump are designed for frequent starts

BT with Torrium®2 Home Pressure System

OPERATING LIMITS	
Capacities to	45 gpm
Maximum total head to	76 psi
Cut-in pressure – Adapts to 80% of last shut-off head pressure	
Minimum setting	15 psi
Maximum setting	80 psi
Cut-out flow rate	0.26 GPM
Maximum liquid temperate (Torrium®2)	158° F
Maximum ambient temperature (Torrium®2)	120° F
Maximum suction lift	25’
Inlet size (dependant upon pump model)	1” F or 1¼” F
Outlet size	1” M
Maximum pump casing pressure	116 psi
Maximum system pressure	100 psi

INSTALLATION AND PRIMING

- On installations with suction lifts a good quality foot valve should be installed
- The system is primed by filling the pump and suction line with water through the priming port, and replacing priming plug prior to switching on
- The PRIME button on the Torrium®2 unit should be held in while the pump is establishing prime

MATERIALS OF CONSTRUCTION	
Part	**Material**
Impellers	304 stainless steel
Lock nut	304 stainless steel
Pump casing	304 stainless steel
Pump backplate	304 stainless steel
Pump shaft	316 stainless steel
Neckrings	Teflon
Seal ring (stationary)	Ceramic
Seal ring (rotating)	Carbon (synthetic)
Seal spring	304 stainless steel
Orings	Nitrile rubber
Stage body	304 stainless steel
Torrium®2 check valve Stem assembly Spring Seal	Nylon 304 stainless steel Nitrile
Torrium®2 body	Glass filled nylon
Priming plug	304 stainless steel
Motor shell	Marine grade aluminum
Lantern / DE endshield	Marine grade aluminum
Shell & lantern bracket finish	Baked polyester

ELECTRICAL DATA					
Model	**BT14-30**	**BT20-30**	**BT14-45**	**BT20-40**	**BT30-30**
Supply voltage/phase	120V/1			220-240V/1	
Supply frequency	60Hz				
Input power (P1) (kW)	0.92	0.98	0.86	1.10	1.44
Output power (P2) (kW)	0.73	0.78	0.68	0.92	1.12
Full load current (A)	7.80	8.20	7.30	4.70	7.00
Locked rotor current (A)	38.00	38.00	38.00	23.00	23.71
Starting	PSC				
Insulation class	Class F				
IP rating	IP55				

HYDRAULIC PERFORMANCE

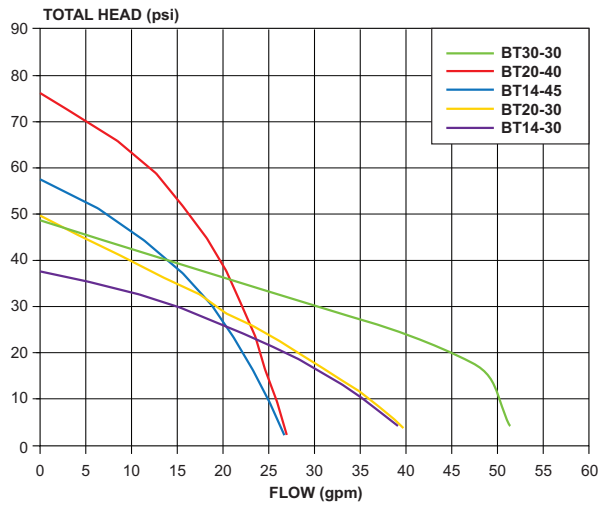

DIMENSIONS (inches)

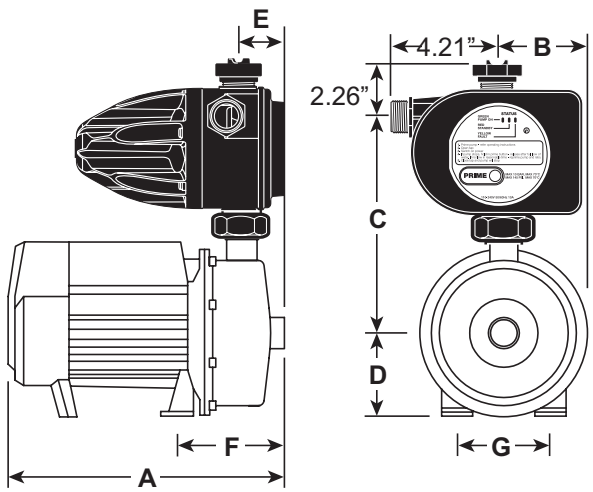

BT with Torrium®2 Home Pressure System

MODEL IDENTIFICATION		
B Booster series stainless steel pressure booster pump	**T** Torrium®2 equipped	**14-30** Flow (gpm) at nominal pressure 14gpm @ 30psi 14-45 = 14gpm @ 45psi 20-30 = 20gpm @ 30psi 20-40 = 20gpm @ 40psi 30-30 = 30gpm @ 30psi

Model	A	B	C	D	E	F	Inlet	Outlet	Net Weight (lbs)	G Hole Diameter @ Centres	
BT14-30	13.80	4.33	12.20	4.33	2.40	5.70	1¼" F	1" M	26.50	0.35	4.72
BT20-30	17.40	3.35	8.00	3.54	5.31	8.85	1¼" F	1" M	27.30	0.27	3.93
BT14-45	15.35	3.35	8.00	3.54	2.95	6.81	1" F	1" M	25.40	0.27	3.93
BT20-40	17.40	3.35	8.00	3.54	5.31	8.85	1" F	1" M	27.30	0.27	3.93
BT30-30	16.14	4.72	5.67	4.76	2.00	5.83	1¼" F	1" M	16.25	0.35	5.51

PERFORMANCE TABLE			
BT Home Pressure System	**Maximum Inlet Pressure**	**Maximum Boost**	**Nominal Flow**
BT14-30	60 psi	40 psi	14 gpm
BT14-45	40 psi	60 psi	14 gpm
BT20-30	50 psi	50 psi	20 gpm
BT20-40	20 psi	80 psi	20 gpm
BT30-30	50 psi	50 psi	30 gpm

To make selecting your Davey pressure booster system easier, Davey provide a guide to the number of faucets that can be operated at the same time without substantially reducing performance, assuming an average delivery of three gallons per minute per faucet.

Indicates that this pump may be suitable for boosting water for watering systems.

H/O & MFG SCORESBY Certified System Quality ISO 9001
H/O & MFG SCORESBY Certified System Environment ISO 14001

davey.com.au

This literature is not a complete guide to product usage. Further information is available from your Davey Dealer, Davey Support Centre and from the relevant product Installation and Operating Instructions. Must be read in conjunction with the relevant product Installation and Operating Instructions and all applicable statutory requirements. Product specifications may change without notice.
® Davey is a registered trademark of Davey Water Products Pty Ltd. © Davey Water Products Pty Ltd 2014.

DWP0116-1/1014