3238 WALK-IN BATHTUB
32" x 38"

Key Attributes

Walk-in Type:	Walk-in
Material:	Acrylic
Soaker Weight:	115 lbs
Jetted Weight:	150 lbs
Average Fill Capacity*:	50-60 gal

*Estimated with occupant inside. May vary based on occupant's volume.

Required Electrical	**Service 110v**
Air Bath or Whirlpool	1x 15 amp GFCI
Whirlpool w/ Inline Heater	1x 20 amp GFCI
Whirlpool & Air Jetted	1x 20 amp GFCI
Soaker	n/a

Available Therapy Systems

3238**S	Non-Jetted Soaking
3238**H	Whirlpool Jetted
3238**A	Air Jetted
3238**D	Whirlpool & Air Jetted

Key Measurements (inches)

Overall Outer:	37.25 x 32.5 x 39
Interior Width:	26.5
Standing Area:	12.5 x 17
Seat Width:	19
Seat Height:	16
Soaking Depth:	30
Drain to Side Wall:	23.5
Drain to Back Wall:	21.75
Step-in Height:	5.75
Door Clearance:	22
Faucet Deck:	3.75
Tile Flange:	n/a
Extension Kit:	n/a

It is vital that tub is completely level with all leveling feet touching the floor for the door, seal and drain to work properly.

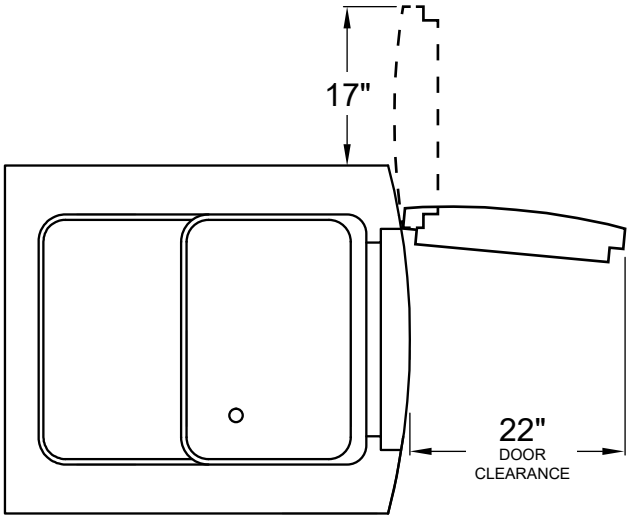

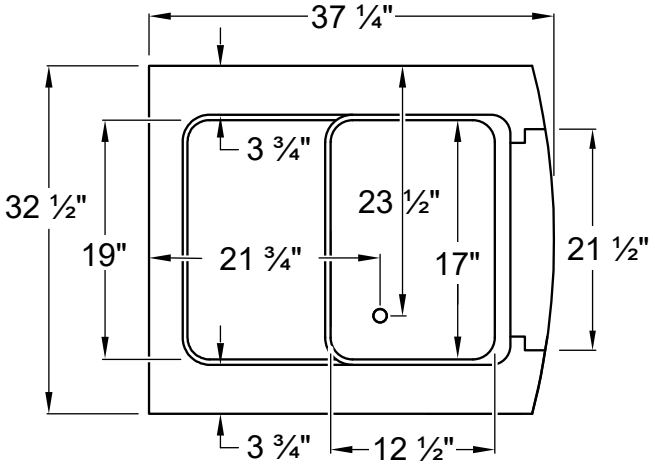

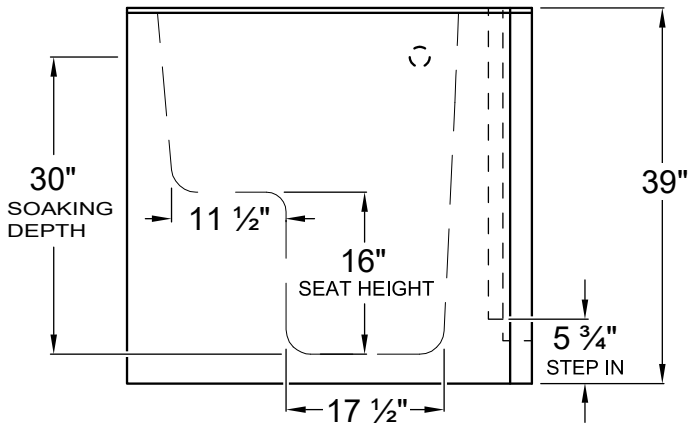

Compliance: Uniform Plumbing Code UPC®; International Plumbing Code IPC®; ADA

Standards: ASME A112.19.15; CSA C22.2 No. 218.2-15; UL 1795, 5th Edition Issued September 02, 2016 including revisions through December 8, 2017

Certifeid: UPC,EGS

- **IMPORTANT!** TEST THE TUB'S DRAIN AND JETS (if any) BEFORE PERMANENT INSTALLATION!
- **INSPECT THE TUB WHEN RECEIVED!** Report any damages or missing parts within 5 business days of delivery date.
- Before ordering or installing, please consider future access to equipment.
- **Please measure tub on-site before building tub surrounding!**
- Jet, pump & blower locations are predetermined and cannot be changed.
- Tub door must remain closed when not in use.
- Please note that installer(s) must be certified or warranty will be voided.
- Measurements are subject to a +/- .5" variance and subject to change without notice. Measurements here in supersede all other published specs prior to publication date shown below.
- Inline heater (if included) is designed to maintain water temperature during operation. It will not heat cold water to desired bathing temperature.
- Product must be registered for warranty activation. See user manual or visit SWCORP.com/register for more information.

v5.1 / 202611. All rights reserved. Subject to change without notice.