MONOGRAM 48" BUILT-IN SIDE-BY-SIDE REFRIGERATOR

ZIS480NN

MONOGRAM

FLUSH INSET INSTALLATION
Allows the refrigerator to be installed flush with adjacent cabinetry

ADVANCED TEMPERATURE MANAGEMENT SYSTEM WITH MULTI-SHELF AIR TOWER
Provides even distribution of air throughout the refrigerator

CLIMATE-CONTROL DRAWER
Allows you to express-chill beverages, express-thaw meats and select specific temperatures for perishable foods

WIFI CONNECT
Enjoy the convenience and freedom of wirelessly controlling functions from your smartphone

LED LIGHTING
Light columns in the freezer and fresh food compartments extend the full length of the interior and LED lighting located inside the vegetable and climate-control drawers illuminate contents without compromising space

GE® WATER FILTER
Has been moved from the fresh food compartment to the overhead cabinet, where it is discreetly out of sight

DELI DRAWER ON FULL-EXTENSION SLIDES
Keeps meats, cheeses and other everyday foods within easy reach

SEALED VEGETABLE DRAWER
Helps preserve the freshness of foods

ADJUSTABLE GLASS SHELVES
Easily accommodate party trays and platters

GALLON-SIZE DOOR BIN
Holds milk containers, two-liter bottles and pitchers

ADJUSTABLE DOOR BINS
Can be moved to one of two positions in seven locations

DAIRY BIN WITH CENTER DIVIDER
Has a unique magnetic seal that locks in freshness

FILTER-CHANGE INDICATOR LIGHT
Located on the upfront control panel, provides a visual reminder when it's time to replace the filter for the water dispenser

SABBATH MODE
Designed to disable functions in accordance with Sabbath-observing practice

MONOGRAM

SECTION 1

STANDARD INSTALLATION

1/4" FRAMED PANELS

3/4" OVERLAY PANELS

SECTION 2

FLUSH INSET INSTALLATION

MONOGRAM

SPECIFICATIONS

Overall Width	48" (121.92 cm)
Overall Height	84" (213.36 cm)
Overall Depth	25 3/4"(65.4 cm)
Door Clearance	28 5/8" (72.1 cm)
Cutout Width	47 1/2" (120.7 cm)
Cutout Height	84±.500 (212.1 - 214.6 cm)
Cutout Depth	24" (61 cm)
Plumbing Requirements	1/4" OD copper tubing or GE SmartConnect kit
Shipping Weight	775 lb

ATTENTION ELECTRICIAN:

A 115 volt 60Hz., 15 or 20 amp power supply is required. An individual properly grounded branch circuit or circuit breaker is recommended. Install a properly grounded 3-prong electrical receptacle recessed into the back wall.

OVERALL DIMENSIONS

STANDARD INSTALLATION

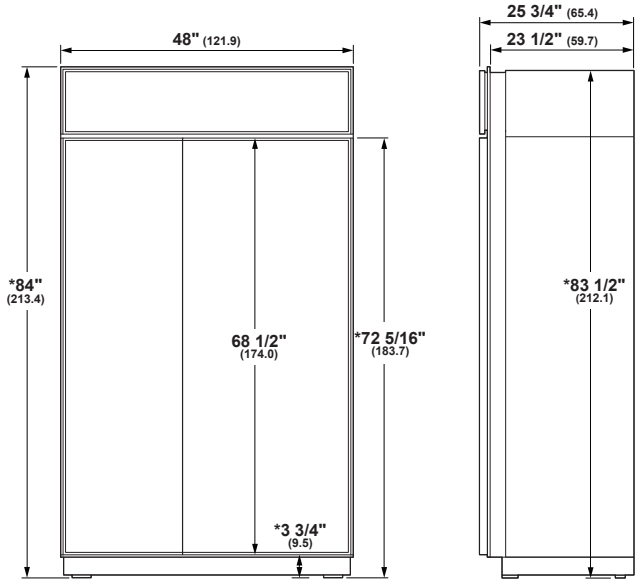

* Shipping height. Use leveling legs and wheels for maximum 1" height adjustment from shipping height.

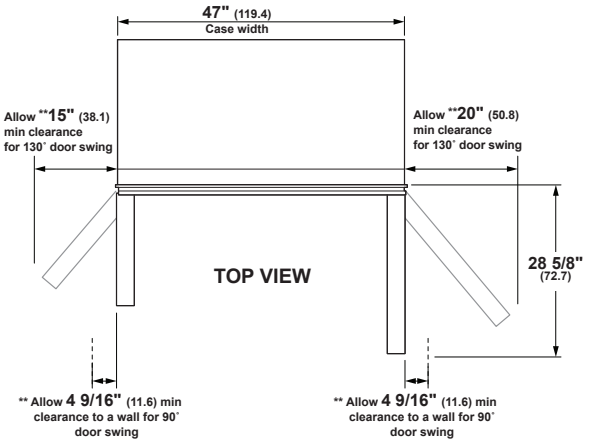

** These refrigerators are equipped with a 3-position door stop. The factory-set 115° door swing can be adjusted to 90° if clearances to adjacent cabinets or walls is restricted. Allow full 130° door swings for pan removal. If the 90° door stop position is used, pan access is maintained, but pan removal is restricted. Dimensions based on custom handle height of 2 9/16" (6.5).

Dimensions in parentheses are in centimeters unless otherwise noted. Actual product dimensions may vary due to manufacturing tolerances.

MONOGRAM

STANDARD INSTALLATION

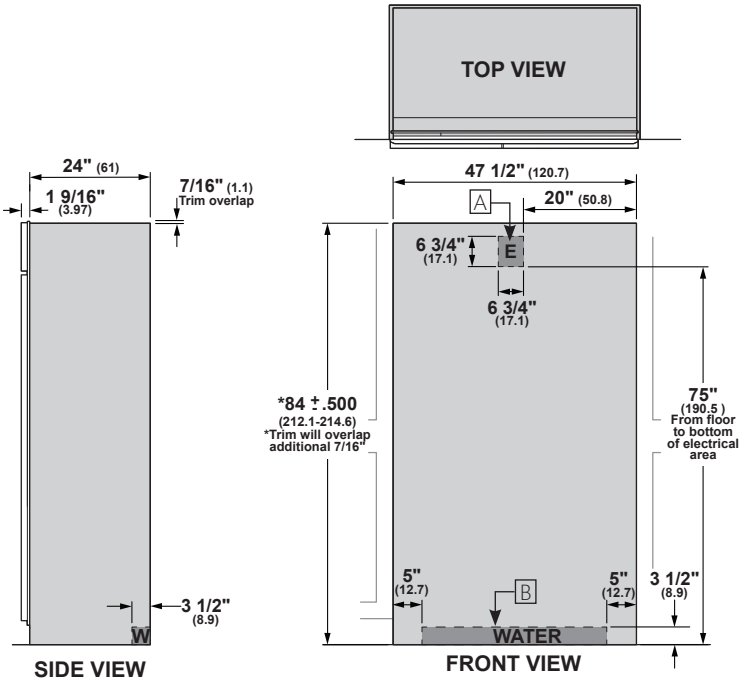

The refrigerator will project forward, slightly beyond adjacent cabinetry.

ANTI-TIP BRACKET

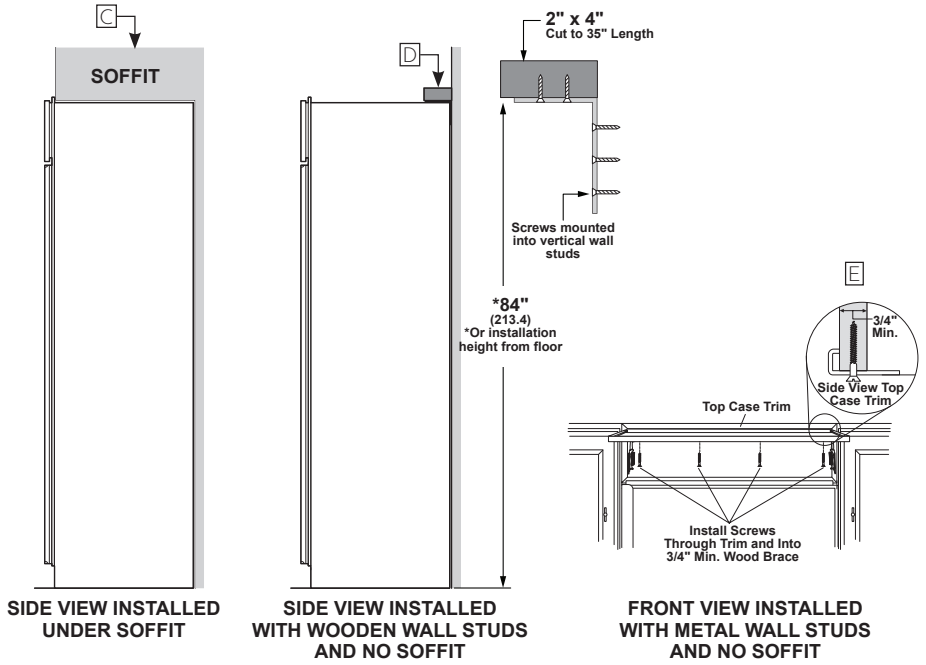

STANDARD INSTALLATION

HELPFUL TIPS

A Mounting the junction box in this location will also allow for front accessibility through access panel.

B Water supply area.

⚠ WARNING:

The refrigerator is top heavy and must be secured to prevent the possibility of tipping forward. Failure to do so may result in death or serious injury.

The information below is for cabinet design only. When installing the anti-tip system you must use the product installation instructions.

Determine your installation construction and required anti-tip configuration:

C Installed Under Soffit
After installing unit into installation opening, raise grille panel and screw metal case sides to adjacent cabinet. When installed under a soffit, the soffit cannot exceed 24" deep. The top case trim overlaps the bottom of the soffit.

D Wooden Wall Studs and No Soffit
- Cut a 2" x 4" block and secure to brackets provided.
- Secure brackets to back wall of opening at 84" or your installation height from the floor.

E Metal Wall Studs and No Soffit
This method requires securely fastened cabinets on both sides and a 3/4" minimum wood brace above unit, with it's front surface 24" from back wall.
- After installing unit into opening, raise grille panel and attach metal case top trim to 3/4" minimum wood brace.
- The brace spanning the enclosure must be securely fastened to cabinets on both sides.

See Installation Instructions for detailed instructions.

CUSTOM SIDE PANELS

F

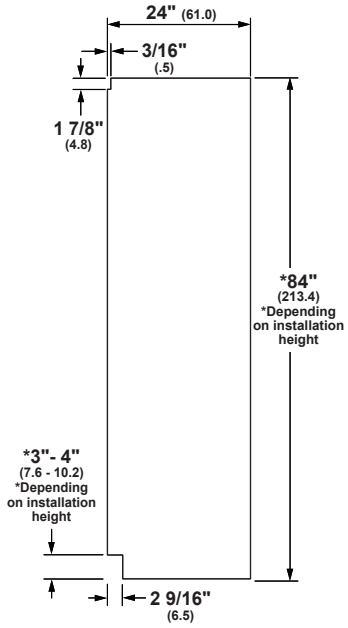

STANDARD INSTALLATION

HELPFUL TIPS

F Side panels must be used whenever the sides of the refrigerator will be exposed. The 1/4" side panels will slip into the side case trim. Secure the panels to the refrigerator with stick-on hook and lo op fastener strips. Order the side panels from the cabinet manufacturer.

1/4" FRAMED PANEL DIMENSIONS

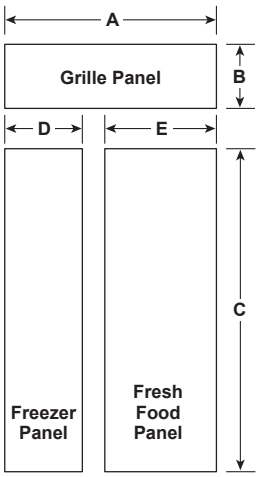

PANEL ASSEMBLY CROSS SECTION

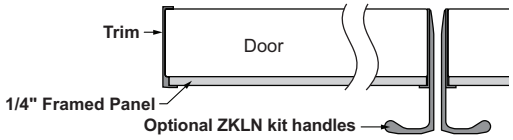

PANEL DIMENSIONS

	A	B	C	D	E
1/4" Framed Panel	45 7/8"	9 1/2"	68 3/8"	18 9/16"	26 9/16"

3/4" OVERLAY PANEL DIMENSIONS

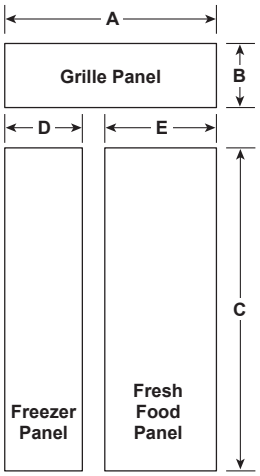

PANEL ASSEMBLY CROSS SECTION

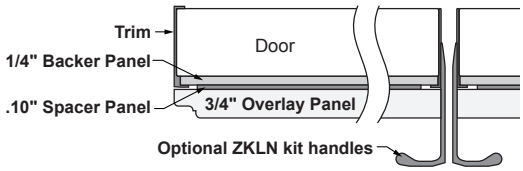

PANEL DIMENSIONS

	A	B	C	D	E
1/4" Backer Panel	45 7/8"	9 1/2"	68 3/8"	18 9/16"	26 9/16"
.10" Spacer Panel	45"	8 5/8"	67"	17 1/4"	25 1/4"
3/4" Overlay Panel	46 1/8"	9 3/4"	68 5/8"	18 13/16"	26 13/16"

.25" + .10" + .75" = 1.10" Total Panel Thickness

STANDARD INSTALLATION

HELPFUL TIPS

Trimmed refrigerators are designed to be customized with decorative panels. Field-installed custom door and grille panels are required.

1/4" FRAMED PANELS:
For 1/4" thick custom panels ordered from your cabinet maker; the decorative panels slide into the trim.

MAXIMUM TOTAL PANEL WEIGHT:
- Fresh food door panel – 75 lbs.
- Freezer drawer panel – 53 lbs.
- Grille panel – 18 lbs

3/4" OVERLAY PANELS:
For 3/4" thick custom panels ordered from your cabinet maker; the decorative panels slide into the trim.

The overlay panel must be secured to a 1/4"-thick backer panel which slides into the trim.
A spacer panel 0.10" thick must be placed between the overlay and backer panels.

Center each panel over the other. Assemble the panels with glue and screws. Screws must be countersunk into the backer panel.

NOTE: Left-to-right offset is not always equal to top-to-bottom offset.

MAXIMUM TOTAL PANEL WEIGHT:
- Fresh food door panel – 75 lbs.
- Freezer drawer panel – 53 lbs.
- Grille panel – 18 lbs

Door handles not included. Custom handles supplied by your cabinet maker may be used. Optional visor handle kit ZKLN is available for ordering. Kit includes two handles.

MONOGRAM

SPECIFICATIONS

Overall Width	50" (127.0 cm)t
Overall Height	84 1/2" (214.6 cm) t
Overall Depth	26" (66.0 cm) t
Door Clearance	28 5/8" (72.1 cm)
Cutout Width	51" (129.5 cm)
Cutout Height	85" (215.9 cm)
Cutout Depth	26 3/16" (66.5 cm)
Plumbing Requirements	1/4" OD copper tubing or GE SmartConnect kit
Shipping Weight	775 lb (351.5 kg)

t Dimensions include 3/4" custom cabinet panel

ATTENTION ELECTRICIAN:

A 115 volt 60Hz., 15 or 20 amp power supply is required. An individual properly grounded branch circuit or circuit breaker is recommended. Install a properly grounded 3-prong electrical receptacle recessed into the back wall.

OVERALL DIMENSIONS AFTER PANEL INSTALL

FLUSH INSET INSTALLATION

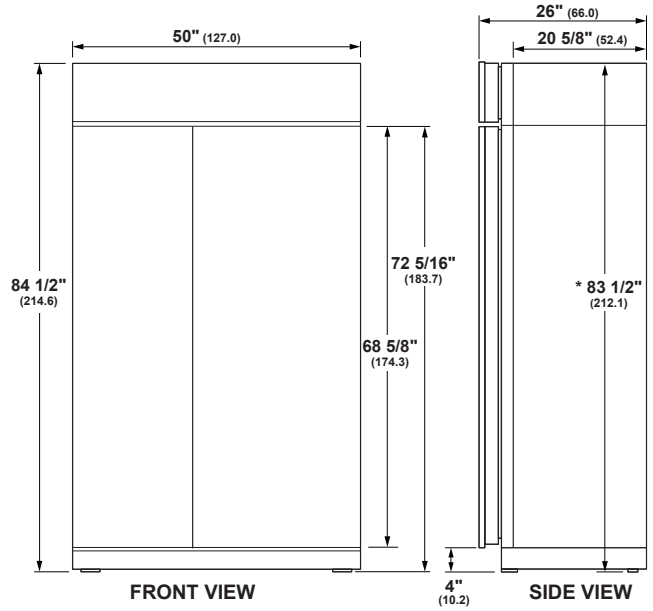

Use leveling legs and wheels for maximum 1" height adjustment from shipping height. Nominal installation height is 84".

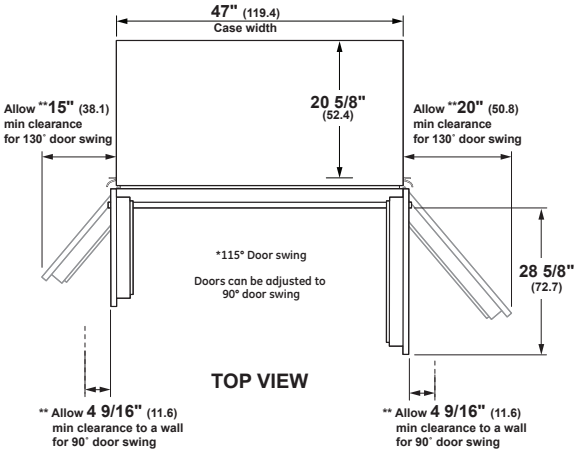

** These refrigerators are equipped with a 3-position door stop. The factory-set 115° door swing can be adjusted to 90° if clearances to adjacent cabinets or walls is restricted. Allow a 15" minimum clearance to wall for pan removal. If the 90° door stop position is used, pan access is maintained, but pan removal is restricted. A 130° door swing option is available for standard installation only. Dimensions based on custom handle height of 2 9/16˚ (6.5).

Dimensions in parentheses are in centimeters unless otherwise noted. Actual product dimensions may vary due to manufacturing tolerances.

MONOGRAM

FLUSH INSET INSTALLATION 3/4" PANELS

FLUSH INSET KIT ZKFN REQUIRED

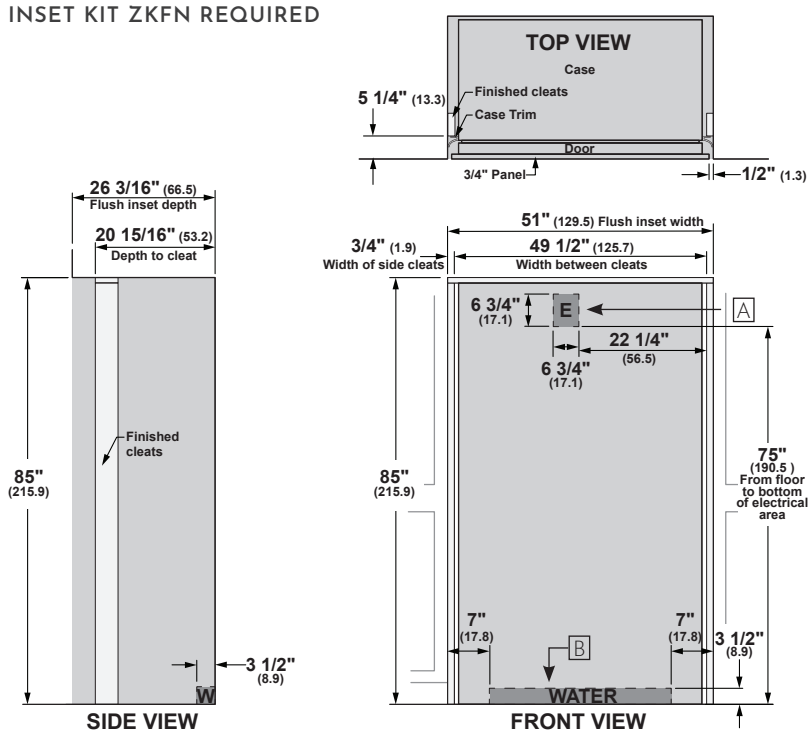

ANTI-TIP BRACKET

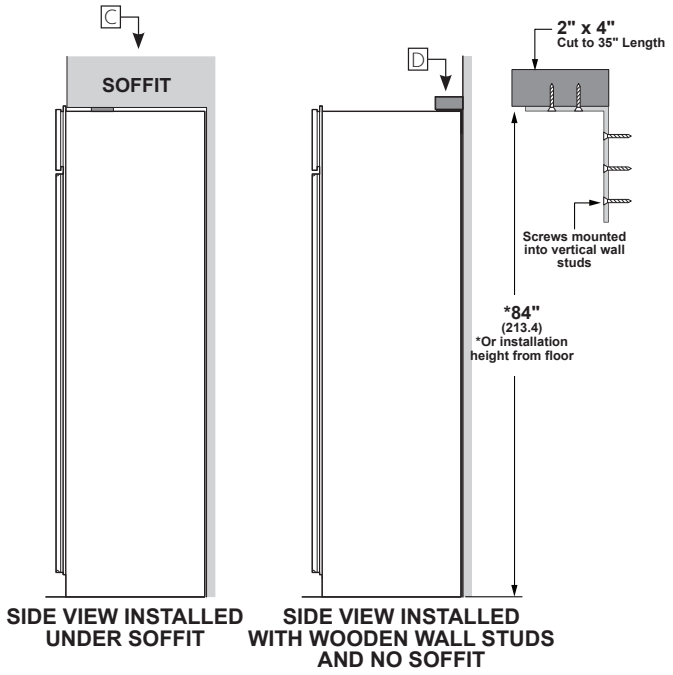

FLUSH INSET INSTALLATION

HELPFUL TIPS

A Mounting the junction box in this location will also allow for front accessibility through access panel.

B Water supply area.

⚠ WARNING:

The refrigerator is top heavy and must be secured to prevent the possibility of tipping forward. Failure to do so may result in death or serious injury.

The information below is for cabinet design only. When installing the anti-tip system you must use the product installation instructions.

Determine your installation construction and required anti-tip configuration:

C Cut a 1" x 4" block 35" long. Measure and mark under the soffit, 5 1/4" from the front edge of the cabinet. Secure the wood block under the soffit. From the bottom of the block to the finished floor should measure 84".

D Wooden Wall Studs and No Soffit
- Cut a 2" x 4" block and secure to brackets provided.
- Secure brackets to back wall of opening at 84" or your installation height from the floor.

See Installation Instructions for detailed instructions.

MONOGRAM

FLUSH INSET INSTALLATION 1/2" PANELS

FLUSH INSET KIT ZKFN REQUIRED

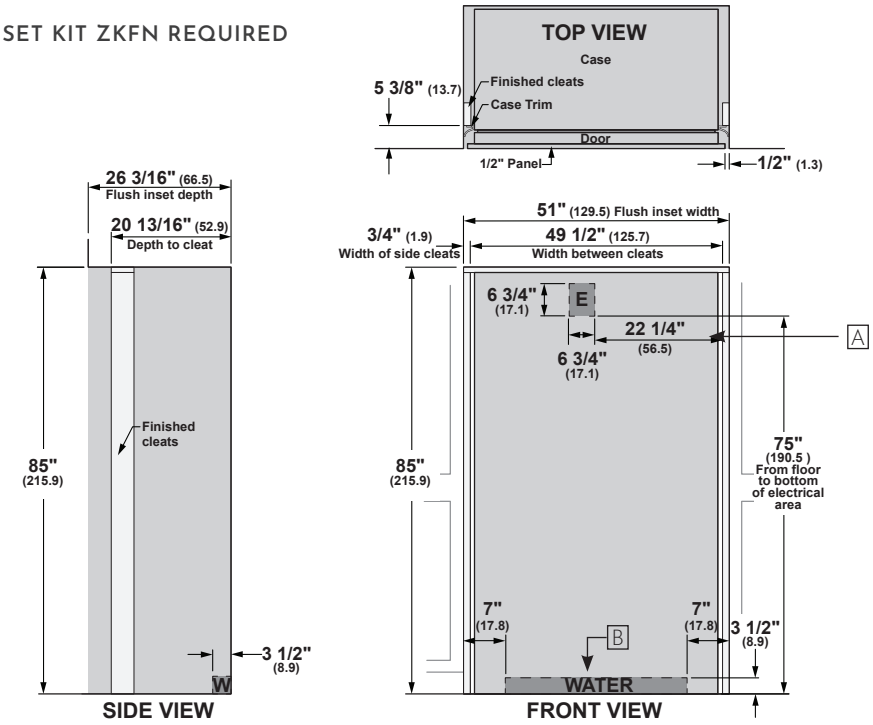

ANTI-TIP BRACKET

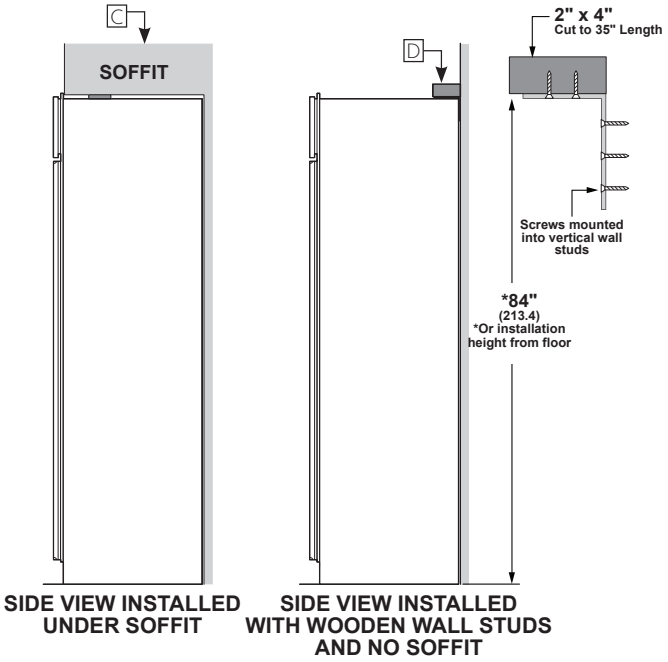

FLUSH INSET INSTALLATION

HELPFUL TIPS

A Mounting the junction box in this location will also allow for front accessibility through access panel.

B Water supply area.

⚠ WARNING:

The refrigerator is top heavy and must be secured to prevent the possibility of tipping forward. Failure to do so may result in death or serious injury.

The information below is for cabinet design only. When installing the anti-tip system you must use the product installation instructions.

Determine your installation construction and required anti-tip configuration:

C Cut a 1" x 4" block 35" long. Measure and mark under the soffit, 5 3/8" from the front edge of the cabinet. Secure the wood block under the soffit. From the bottom of the block to the finished floor should measure 84".

D Wooden Wall Studs and No Soffit
- Cut a 2" x 4" block and secure to brackets provided.
- Secure brackets to back wall of opening at 84" or your installation height from the floor.

See Installation Instructions for detailed instructions.

MONOGRAM

FLUSH INSET 3/4" PANEL DIMENSIONS

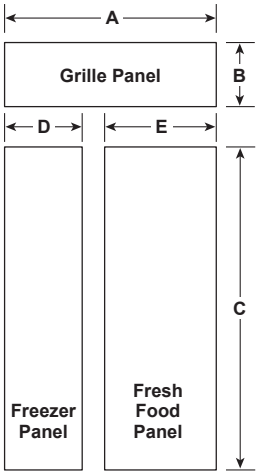

PANEL DIMENSIONS

A	B	C	D	E
50"	11 3/16"	68 5/8"	20 7/8"	28 7/8"

3/4" RAISED DOOR PANEL ROUTING

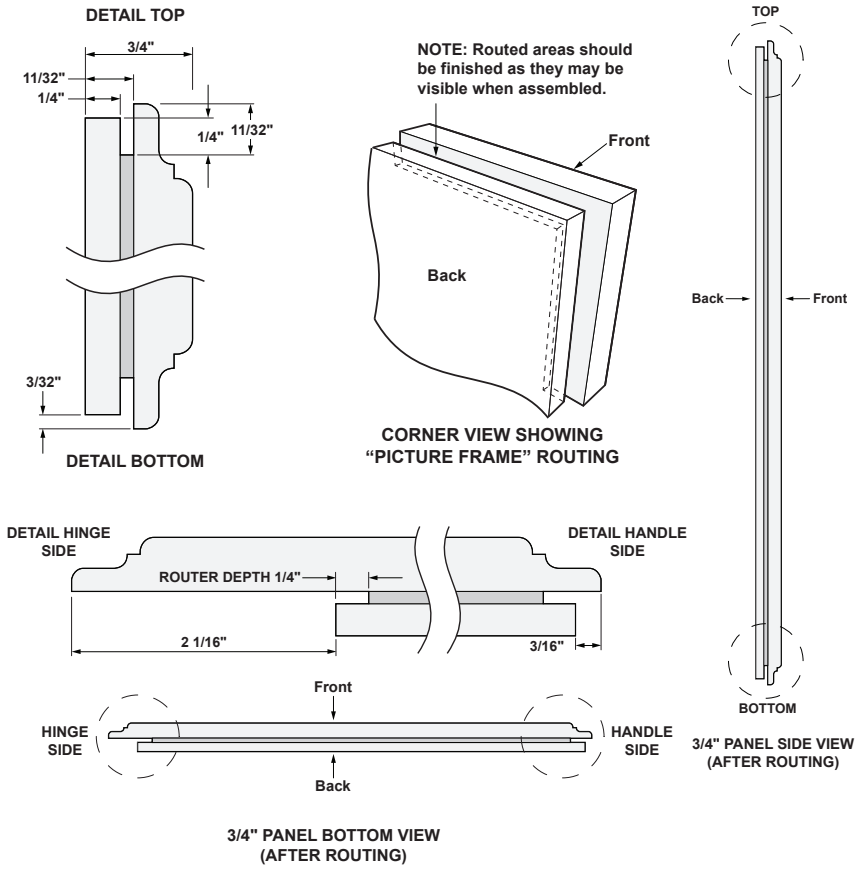

FLUSH INSET INSTALLATION

HELPFUL TIPS

Trimmed refrigerators are designed to be customized with decorative panels. Field-installed 1/2" or 3/4" custom door and grille panels are required. For 3/4" raised door and grille panels, routing is required. The router depth is 1/4" all the way around the panel's backs. Additional panel width reductions are required per the diagrams shown. This will create "picture frame" routing allowing the panels to slide into the attached door and grille trims.

MAXIMUM TOTAL PANEL WEIGHT:

- Fresh food door panels – 75 lbs.
- Freezer drawer panel – 53 lbs.
- Grille panel – 18 lbs.

DOOR HANDLES

Door handle not included. A custom handle supplied by your cabinet maker may be used.

⚠ WARNING:

Door Trim Pinch Point

Hazard Improper installation can lead to a finger pinch point hazard between the side door trim and the cabinets when operating the door, especially with children. To minimize this risk you must follow the installation instructions for cabinet dimensions, trim assembly and door stop angle.

3/4" RAISED GRILLE PANEL ROUTING

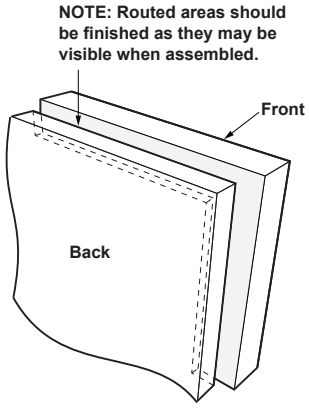

CORNER VIEW SHOWING "PICTURE FRAME" ROUTING

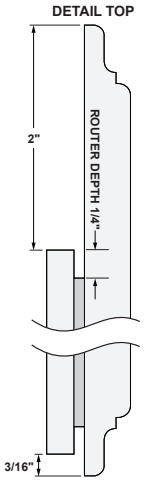

DETAIL BOTTOM

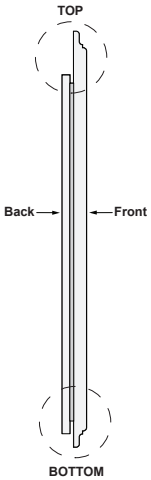

3/4" PANEL SIDE VIEW (AFTER ROUTING)

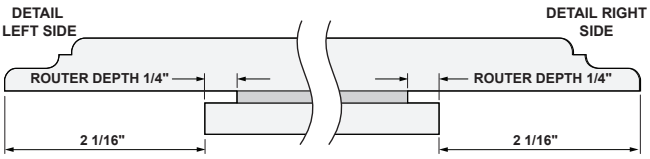

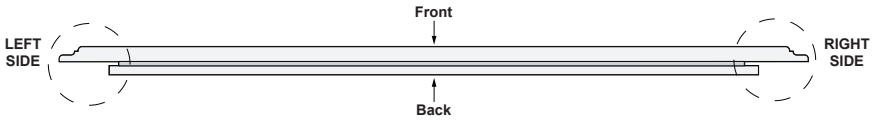

3/4" PANEL BOTTOM VIEW (AFTER ROUTING)

FLUSH INSET INSTALLATION

HELPFUL TIPS

Trimmed refrigerators are designed to be customized with decorative panels. Field-installed 1/2" or 3/4" custom door and grille panels are required. For 3/4" raised door and grille panels, routing is required. The router depth is 1/4" all the way around the panel's backs. Additional panel width reductions are required per the diagrams shown. This will create "picture frame" routing allowing the panels to slide into the attached door and grille trims.

MAXIMUM TOTAL PANEL WEIGHT:

- Fresh food door panels – 75 lbs.
- Freezer drawer panel – 53 lbs.
- Grille panel – 18 lbs.

DOOR HANDLES

Door handle not included. A custom handle supplied by your cabinet maker may be used.

MONOGRAM

FLUSH INSET 1/2" PANEL DIMENSIONS

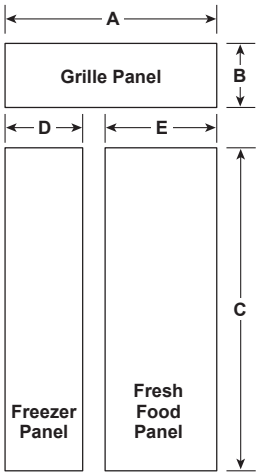

PANEL DIMENSIONS

	A	B	C	D	E
1/4" Backer Panel	45 7/8"	9 1/2"	68 3/8"	18 9/16"	26 9/16"
.10" Space Panel	45"	8 5/8"	67"	17 9/16"	25 9/16"
1/2" Overlay Panel	50"	11 3/16"	68 5/8"	20 7/8"	28 7/8"

1/4" BACKER ASSEMBLY ROUTING DIMENSIONS

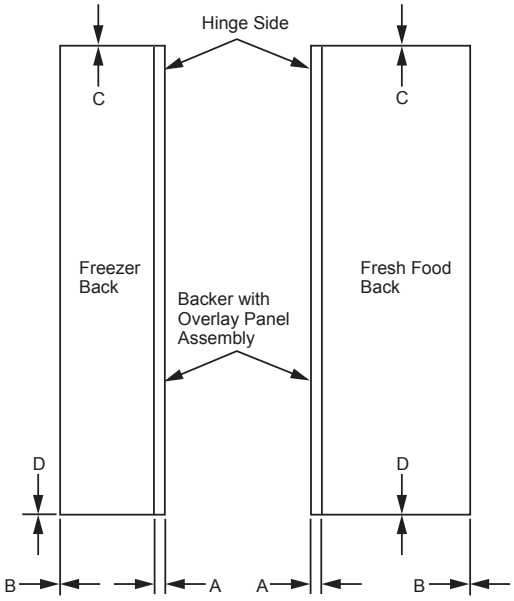

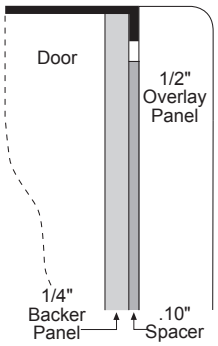

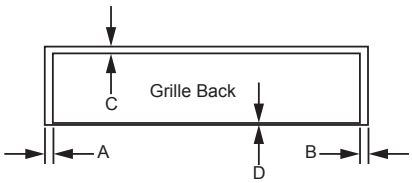

PANEL DIMENSIONS

	A	B	C	D
Fresh Food Panel	2 1/16"	1/4"	1/8"	1/8"
Freezer Panel	2 1/16"	1/4"	1/8"	1/8"
Grille Panel	2 1/16"	2 1/16"	1 15/32"	7/32"

FLUSH INSET INSTALLATION

HELPFUL TIPS

The 1/2" overlay panel must be secured to a .10" spacer panel and a 1/4" thick backer panel, which slides into the trim.

ASSEMBLE THE PANELS WITH GLUE AND SCREWS:

- Center the spacer panel on the backer panel, left to right and top to bottom. Secure the panels with glue.
- Refer to the chart for locating the backer panel to the overlay panel. Secure the overlay panel to the backer panel with glue and screws. Screws must be countersunk into the backer panel.

MAXIMUM TOTAL PANEL WEIGHT:

- Fresh food door panel – 75 lbs.
- Freezer drawer panel – 53 lbs.
- Grille panel – 18 lbs.