EVERY THING YOU NEED TO KNOW ABOUT YOUR XO

XO PERFORMANCE XLT GAS GRILL

MODELS: XOGRILL32XLT2 | XOGRILL40XLT2

I worked really hard on this manual - so please read it...

XO

XO APPLIANCE

When buying any XO appliance
you can be confident you have chosen a
high quality, innovative and stylish product
from a company that cares about you!
If you require service or have questions,
Help is only a phone call away -
call: 973-403-8900
Talk to one of our appliance experts.

CONGRATULATIONS
on purchasing your XO.
Before you proceed, take just a
moment to register your XO at:

www.xoappliance.com/register-your-product/

Or simply scan here to be taken
to the registration page...

REGISTRATION HELPS YOU BY -
Ensuring warranty coverage should you need service
Providing ownership verification for insurance purposes
XO can notify you in the event of product changes or recalls.

MODEL AND SERIAL NUMBER

You may require service or parts one day -
take a minute to locate and record some important info about your grill.

- Model number
- Date of purchase
- Proof of purchase by the original owner
- Serial number

The serial number can be located on the rating plate which is located on the left side of the grill or on the pull-out drip tray lighting instructions and also on the underside of the drip tray.

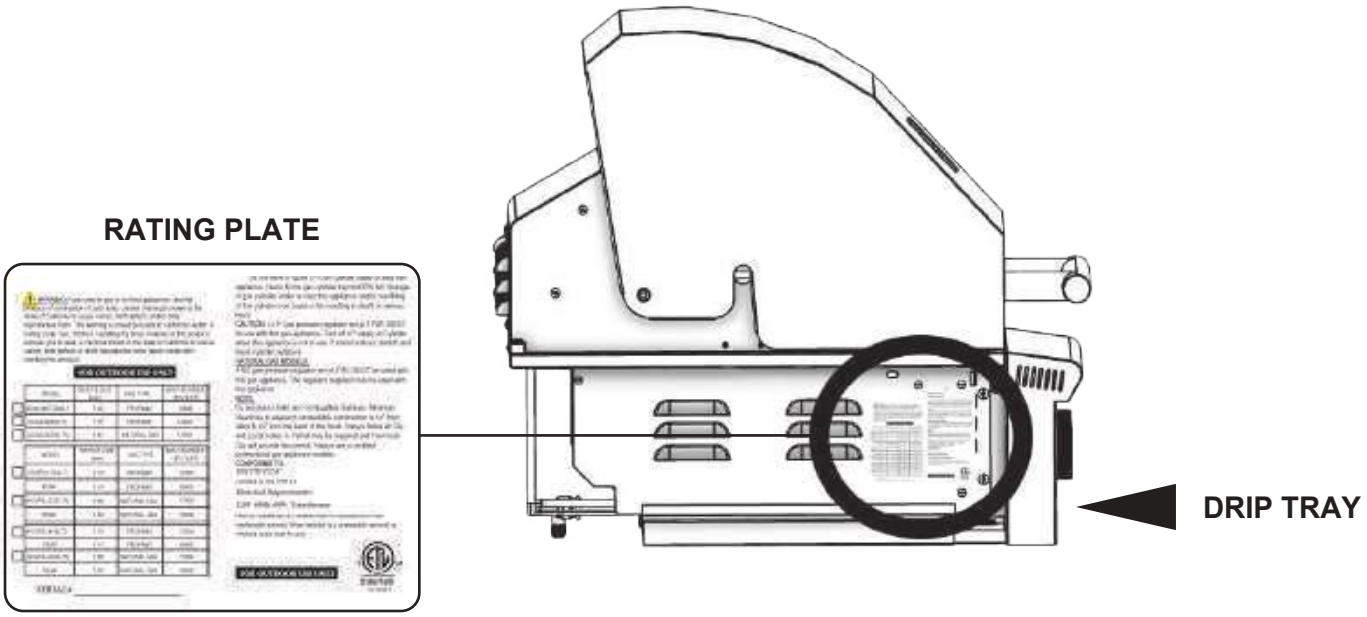

XOGRILL40XLT2 **XOGRILL40XLT2**

TAKE A MINUTE TO CIRCLE YOUR MODEL NUMBER ABOVE
AND RECORD YOUR SERIAL NUMBER HERE:

IMPORTANT - WARNINGS

DANGER

Read this manual carefully and completely before installing, servicing or operating the grill to reduce risk of:

1. **FIRE**
2. **PERSONAL INJURY OR PROPERTY DAMAGE**
3. **IMPROPER INSTALLATION**

THIS PRODUCT IS FOR OUTDOOR USE ONLY. Do not install or operate indoors, including but not limited to garages, screened in porches, breezeways, gazebos or other enclosed areas. This outdoor cooking appliance is not intended for installation in or on recreational vehicles, boats, trailers, or other such moving vehicles. It cannot be installed in any area with limited or no ventilation. Failure to operate this unit in a well-ventilated space can cause property damage, injury, or death. Keep the area surrounding the grill clear and free from all combustible materials, gasoline and other flammable vapors and liquids.

WARNING

DO NOT store gasoline or other flammable liquids or vapors within 25’ of this or any gas appliance.
Do not store or install additional propane tanks within 10’ of this or any other gas appliance.
The installation must conform with all local code or, in the absence of local codes, with either the National Fuel Gas code ANSIZ223.1/NFPA 54 or the National Gas and Propane Installations code, CSA B149.1, or the Propane Storage and Handling code, CSA B149.2.

CAUTION

1. The outdoor gas cooking appliance and its individual shutoff valve must be disconnected from the gas supply piping system during any system pressure testing in excess of 0.5 psi (3.5 kPa).
2. The outdoor gas cooking appliance must be isolated from the gas supply by closing its individual shutoff valve piping system during any system pressure testing in less than or equal to 0.5 psi (3.5 kPa).

DANGER

IF YOU SMELL GAS:

1. **SHUTOFF THE GAS TO THE APPLIANCE.**
2. **EXTINGUISH ANY OPEN FLAME | SECURE ANY POTENTIAL IGNITION SOURCES**
3. **OPEN THE HOOD AND DOORS TO THE CART OR ISLAND**

If odor continues, keep away from the appliance - IMMEDIATELY call your gas provider and/or your local fire department

IMPORTANT

NOTICE: COMMONWEALTH OF MASSACHUSETTS

1. Massachusetts requires all gas be installed using a plumber or gas fitter carrying the appropriate Massachusetts license.
2. All permanently-installed natural gas or propane installations require a “T” handle type manual gas valve be installed in the gas supply line to this appliance.
3. This does not apply to portable propane installations using a 20 pound cylinder.

WARNING: CALIFORNIA PROPOSITION 65

The burning of gas cooking fuel generates some by-products which are on the list of substances which are known by the State of California to cause cancer or reproductive harm.

California law requires businesses to warn customers of potential exposure to such substances. To minimize exposure to the substances, always operate this unit according to the use and care instructions found in this manual. Be certain to provide adequate ventilation when cooking.

Warning: Handling the brass material on this product exposes you to lead, a chemical known to the state of California to cause cancer, birth defects or other reproductive harm. (Wash hands after handling this product.)

For more information go to this website
www.P65warnings.ca.gov

CAUTION

Never leave children unsupervised around the XO grill.

Pre-heating for more than 15 minutes may overheat and cause damage to the grill.

Never cover slots, holes, or passages in the grill fire box or cover an entire rack with material such as aluminum foil. Doing so blocks air flow through the oven and may cause carbon monoxide poisoning. Aluminum foil linings may trap heat causing a fire hazard.

Do not leave the grill unattended
.

THANK YOU FOR CHOOSING XO

As you unbox your new grill, please take a moment to make certain all the parts are included and there was no damage in shipping.
Need Help or Spare Parts? For fastest service contact XO at 973-403-8900 or visit www.xoappliance.com. Do not return to the dealer.
Please recycle when you dispose of the packing materials.

One of the fastest and easiest ways to get help is to visit our YouTube Channel which has lots of useful How To videos - Just scan the QR Code or go to https://www.youtube.com/channel/UCT-Ip-dM9hoPydpxZfrZzRA

WARNING: HEANY WEIGHT HAZARD - TEAM LIFT!

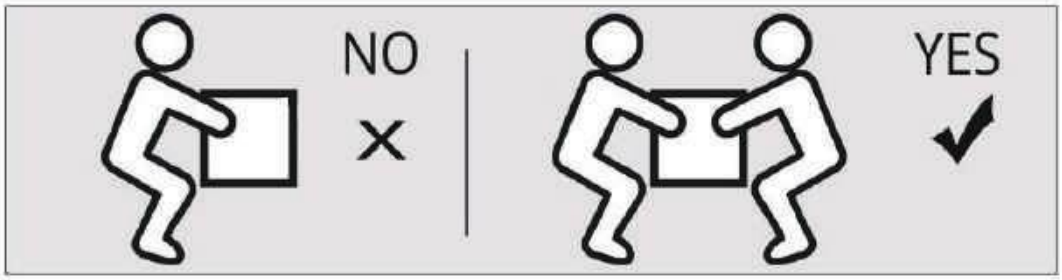

THIS INSTRUCTION MANUAL CONTAINS IMPORTANT INFORMATION NECESSARY FOR THE PROPER ASSEMBLY AND SAFE USE OF THE APPLIANCE. READ AND FOLLOW ALL INSTRUCTIONS AND WARNINGS BEFORE ASSEMBLING AND USING THE APPLIANCE. FOLLOW ALL WARNINGS AND INSTRUCTIONS WHEN USING THE APPLIANCE. FAILURE TO INSTALL AND OPERATE THIS UNIT IN ACCORDANCE WITH THESE INSTRUCTIONS CAN CAUSE PROPERTY DAMAGE, INJURY OR DEATH.

INSTALLATION, CARE AND USE OF YOUR XO PERFORMANCE XLT COOKING PRODUCT

THIS MANUAL MUST REMAIN WITH THE PRODUCT OWNER FOR REFERENCE

THE FOLLOWING PRODUCTS ARE COVERED IN THIS MANUAL:

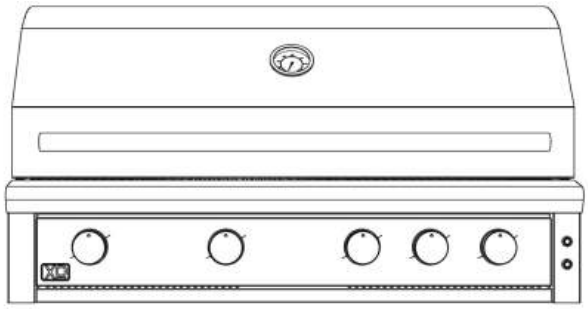

XOGRILL40XLT2 (L/N)

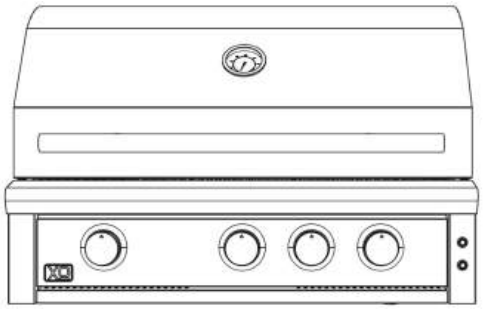

XOGRILL32XLT2 (L/N)

<u>FOR OUTDOOR RESIDENTIAL USE ONLY</u>

IMPROPER INSTALLATION, ADJUSTMENT, ALTERATION, SERVICE OR MAINTENANCE CAN CAUSE PROPERTY DAMAGE, INJURY, OR DEATH. READ THIS MANUAL THOROUGHLY BEFORE INSTALLATION USE OR SERVICING OF THIS EQUIPMENT.

NOTE TO INSTALLER

This manual must remain with the grill. Check local building codes for proper method of installation. In the absence of local codes, this unit must be installed in accordance with the National Fuel Gas Code NO. ANSI Z21.58D-2002 USA or CAN/CGA-B149.1/2 Natural Gas/Propane Code (Canada), latest edition of National Electrical Code CGA 1.6b2005 or latest edition.

Please note, pictures and other information may change without notice.

WHERE THINGS ARE

Product Registration..... 2-3
Warnings..... 4-5
Link - How To Videos..... 6
Models..... 7
Product Features..... 9
Specifications..... 10
Dimensions..... 11
Safety..... 12
Grill Location - Clearances..... 13
Factoring in Wind Direction..... 14
Overhead Construction..... 15
Outdoor Rated Hoods..... 16
Cutout Dimensions..... 17
Insulated Jacket Installation..... 18
Outdoor Island Venting..... 19
Electrical Hook Up..... 20 - 21
Before your Gas Hook Up..... 22 - 23
Natural Gas Installation..... 24 - 25
Propane Tank Installation..... 26 - 27
Grilling Safety..... 28
Lighting your grill safely..... 29 - 31
Cooking and Grilling Tips..... 32 - 33
Cleaning and Maintenance..... 34 - 37
Wiring and Bulb Replacement..... 38 - 39
Trouble Shooting..... 40 - 41
Parts and Obtaining Service..... 42 - 46
Warranty..... 47

MEET YOUR XO
UNIQUE FEATURES AND BENEFITS

The XO gas grill has some of the most unique grilling features that will enhance your grilling experience and make you that “Master Chef”.
These Features include; Massive Stainless Steel Grates, Full Coverage Stainless Steel Flame Tamers, and Heavy Duty High Output Stainless Steel Burners.
All together this grilling machine is built to impress the most demanding cooks.

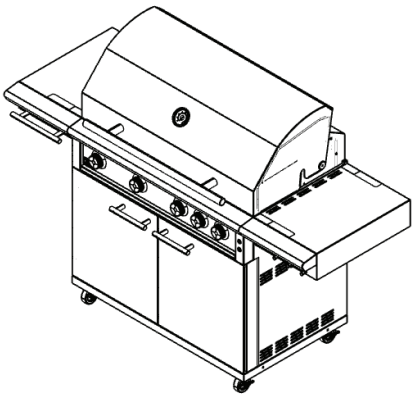

The grates are all welded heavy duty, stainless steel square bar stock - designed to adsorb more heat and deliver it back in the form of strong grill marks.

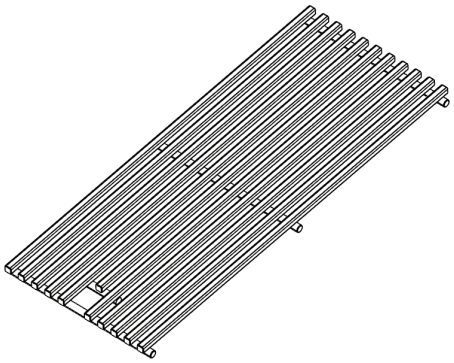

The Full Coverage Stainless Steel Flame Tamers perform triple duty by safeguarding the burners from drippings, and then vaporizing them to create the amazing smokey flavor of the grill - all while helping to distribute heat more evenly within the fire box.

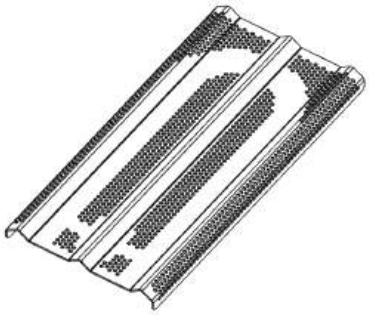

The powerful, heavy gauge Stainless Steel “U” burners deliver up to 18,000 BTUs each to heat up fast and keep pace with your hungriest guests.
These burners are lifetime warrantied.

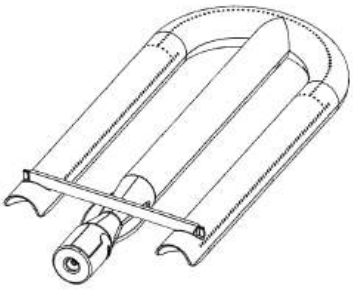

SPECIFICATIONS OVERVIEW

DESCRIPTION	XOGRILL32XLT2	XOGRILL40XLT2
Main Cooking Area Sq. In.	530	662
Warming Rack Sq. In.	172	210
Total Cooking Area Sq. In.	702	872
Gas Type (specify)	NG or LP	NG or LP
Orifices Main Burners NG	1.89 mm	1.89 mm
Orifices Main Burners LP	1.15 mm	1.15 mm
Orifices Rear Burner NG	1.72 mm	1.72 mm
Orifices Rear Burner LP	1.03 mm	1.03 mm
Main Burners	(3) Tubular SS	(4) Tubular SS
Main Burner BTUs (each / total)	16,000 / 48,000	16,000 /64,000
Cooking Grates	(4) 18” x 7 3/8” SS	(5) 18” x 7 3/8” SS
Warming Rack	Tilt and Store SS	Tilt and Store SS
Flame Tamers	(3) Full Coverage SS	(4) Full Coverage SS
Heat Zone Dividers	(2) Removable SS	(3) Removable SS
Rear Burner	Ceramic InfraRed	Ceramic InfraRed
Rear Burner BTUs	10,000	10,000
Rotisserie Kit	Optional	Optional
Hood Assembly	Welded Stainless	Welded Stainless
Spring Counter Balanced	Yes	Yes
Control Panel	Welded Stainless	Welded Stainless
Drip Tray	Welded Stainless	Welded Stainless
Ignition	Reliable Flame Thrower	Reliable Flame Thrower
Temperature Gauge	Hood Mounted	Hood Mounted
Control panel Lighting	12v Blue LED	12v Blue LED
Interior Work Lighting	12v Halogen (2)	12v Halogen (2)
Grill Cutout Dimensions	8 1/2” x 21 1/4” x 30 5/8”	8 1/2” x 21 1/4” x 38 3/8”

PRODUCT DIMENSIONS

The serial number can be located on the rating plate which is located on the left side of the grill or on the pull-

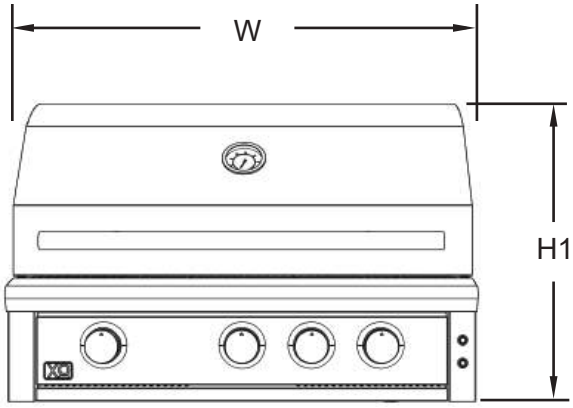

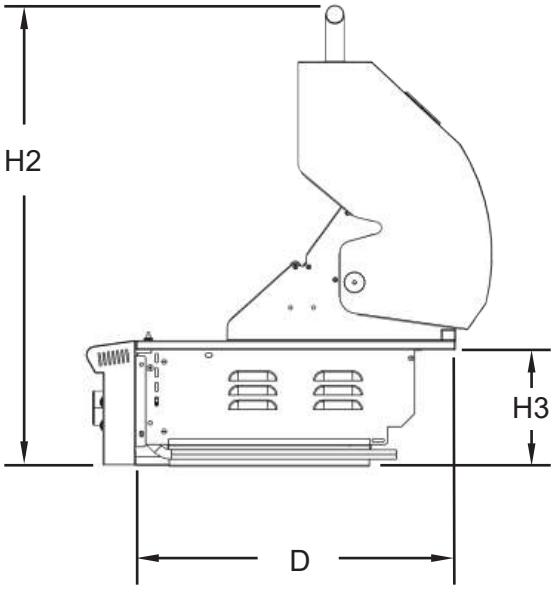

	XOGRILL40XLT2	XOGRILL32XLT2
WIDTH (W)	39 3/4”	32 3/4”
DEPTH (D)	25 3/4”	25 3/4”
HEIGHT 1 (H1)	22 7/8”	22 7/8”
HEIGHT 2 (H2)	32 1/4”	32 1/4”
HEIGHT 3 (H3)	8 7/16”	8 7/16”

YOUR SAFETY MATTERS

WARNING: READ AND FOLLOW ALL SAFETY PRECAUTIONS

Read this manual carefully and completely before installing and using your grill to reduce the risk of fire, burn hazard or other injury and to ensure proper installation and servicing.

Never use rusted, dented or damaged propane cylinders. Never store additional or empty propane cylinders in the grill cabinet or in the vicinity of this or any other gas or electrical appliance. Do not store propane cylinders indoors or on their sides for gas may escape. Gas cylinders are highly flammable.

Children should never be left unsupervised in areas where a grill is located. Place your grill well away from areas where children play. Do not store items that may interest children in or around the grill, in the cart or in the enclosure or Island.

Never move a grill when hot. When in use portions of the grill are hot enough to cause severe burns.

Always maintain the required clearances as detailed in this manual. The grill is designed for outdoor use only. Never use in any garage, building, shed, breezeway or other enclosed area. Do not use this grill under any unprotected overhead combustible construction. Combustible material exposed to heat will catch on fire.

XO Grills are not designed or certified for and are not to be installed in or on recreational vehicles, portable trailers, boats or any other moving installation. XO Grills are for residential use only.

Always have a Fire Extinguisher accessible - never attempt to extinguish a grease fire with water or other liquids.

Store your grill in a well-ventilated area. If stored indoors, detach and leave the LP cylinder outdoors in a well-ventilated area away from heat and where children cannot tamper with it. Always store tanks outdoors.

Keep any electrical supply cord and the fuel supply hose away from any heated surfaces. Electrical cords should be placed away from walkways to avoid tripping hazards and must be protected by a GFI circuit.

Do not repair or replace any part of the grill unless specifically recommended in this manual. All other service must only be performed by a certified and qualified BBQ technician.

For hard piped installations, your professional installer must show you where your gas supply shut-off is located and instruct you in it's use. All gas lines must have a quick shut-off that is readily and easily accessible. If you smell gas, check for gas leaks immediately. Check only with a soap and water solution. Never check for gas leaks with an open flame.

During any pressure testing of hard piped systems, outdoor cooking appliances and individual shutoff valves must be disconnected from the gas supply piping system at test pressures in excess of 0.5 psi (3.5 kPa).

If using an LP gas supply hose, inspect prior to each use of the grill. If there is any evidence of excessive wear, abrasion, cuts, or cracking it must be replaced before using the grill.

GRILL LOCATION & CLEARANCES

BUILT-IN INSTALLATIONS | NON-COMBUSTIBLE CONSTRUCTION
The XO Built in grills are designed for easy installation into a non-combustible masonry island. In installations of this type, non-combustible materials like brick, stone or cement board completely surround the appliances supported by block or metal framing.

To be considered non-combustible, no materials shall be used within 14” of the unit that will burn or be affected by the high heat the unit can produce.

The grill slides into the cutout opening of the island and is supported by the flanges that surround the grill sides and rear. Do not grout the unit in place so that it can be removed for maintenance.
In addition to 14” non-combustible materials clearance in all directions; proper hood operation requires a 5” clear space minimum behind the unit.

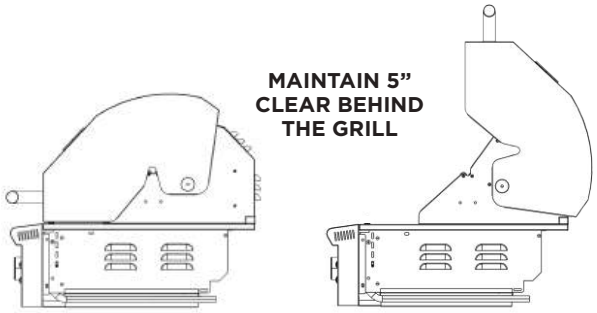

INSTALLATIONS | COMBUSTIBLE CONSTRUCTION
Built-In construction which employs some combustible materials is permitted providing certain additional requirements are met.
Combustible materials include any surface or framing materials which may ignite, burn, support combustion, emit smoke or melt when exposed to heat.
An approved, insulated jacket designed to shield each gas appliance must be used. All minimum clearances to adjacent combustible construction must be increased to 14” on all sides and 16” to the rear of the grill.

These minimum clearances also apply to the placement of a portable / cart mounted grill.

CLEARANCES TO COMBUSTIBLE

SIDES	**14”**
REAR	**16”**
BELOW	**14”**

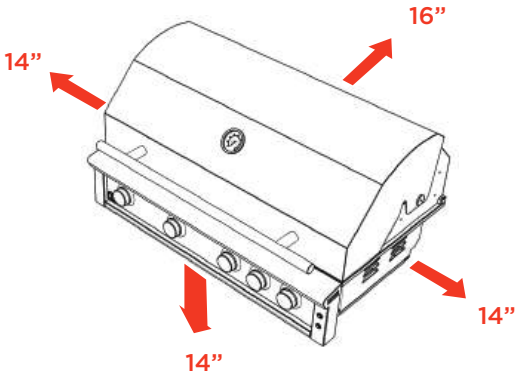

NEVER INSTALL OR USE YOUR GRILL IN ANY ENCLOSED SPACE SUCH AS, BUT NOT LIMITED TO, GARAGES, PORCHES OR BREEZEWAYS.
NEVER USE YOUR GRILL ON ELEVATED PATIOS OR DECKS.
NEVER INSTALL OR USE UNDERNEATH UNPROTECTED OVERHEAD CONSTRUCTION.

GRILL LOCATION & WIND

WHERE IS THE WIND COMING FROM?
When selecting a suitable location, consider important factors such as exposure to the wind and foot-traffic patterns.

If you have a free standing grill, position it so the prevailing wind blows toward the front control panel (at your back when grilling). This will support the proper front to rear of airflow required for proper operation of your grill.

Built-in grills located in areas with prevailing winds should be protected by a wind barrier positioned behind the appliance. All clearances must be observed for safe operation.

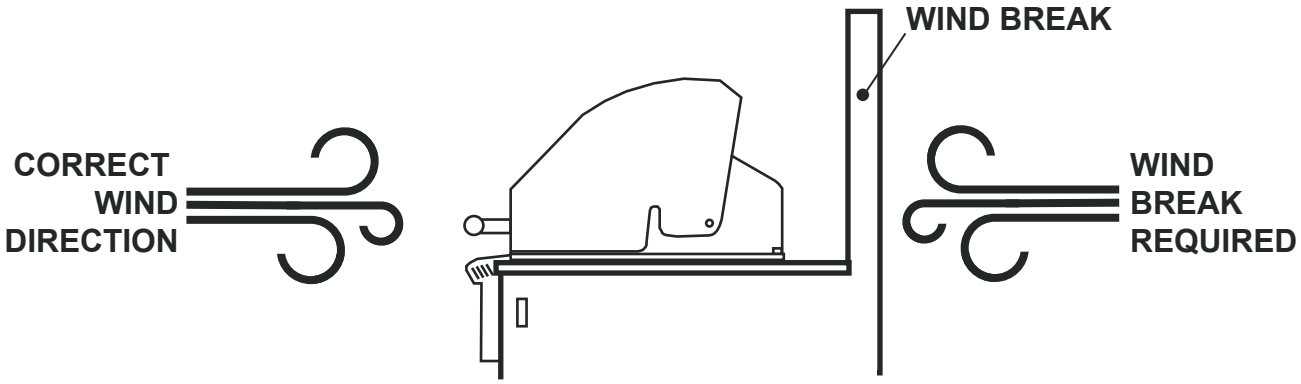

WARNING

FAILURE TO COMPENSATE FOR PREVAILING WIND CAN RESULT IN EXCESSIVE HEAT BUILD UP AND RESULT IN DAMAGE TO THE APPLIANCE AND RISK OF FIRE, PROPERTY DAMAGE OR PERSONAL INJURY.

If you suspect the grill is overheating, using an heat resistant mitt, open the hood. After first checking the control knobs for excessive temperature, turn them down to a lower setting.

If you have a freestanding grill - turn it OFF, and after allowing it to cool, reposition the grill based on prevailing wind patterns as described above.

OR - install a wind break to prevent the wind from interfering with the correct front to back exchange of air.

On windy days, do not operate the grill on high with the hood closed for more than 15 minutes.

Never leave your grill unattended while operating.

Your XO Grill must draw air in from the front and exhaust heated air from the rear in order to operate.

Position your grill so that smoke and exhaust will not gain access to the house through open windows, doors, or ventilation.

OVERHEAD CONSTRUCTION

- If installed under any combustible construction the area above the cooking surface of the grill must be covered with an approved exhaust hood.
- It is highly recommended the hood be sized with a minimum 3” overhang on all exposed sides.
- The exhaust hood shall provide no less than 1,200 CFM of proper exhaust ventilation.
- The exhaust hood must be approved for outdoor installation and used with a dedicated GFCI branch circuit.

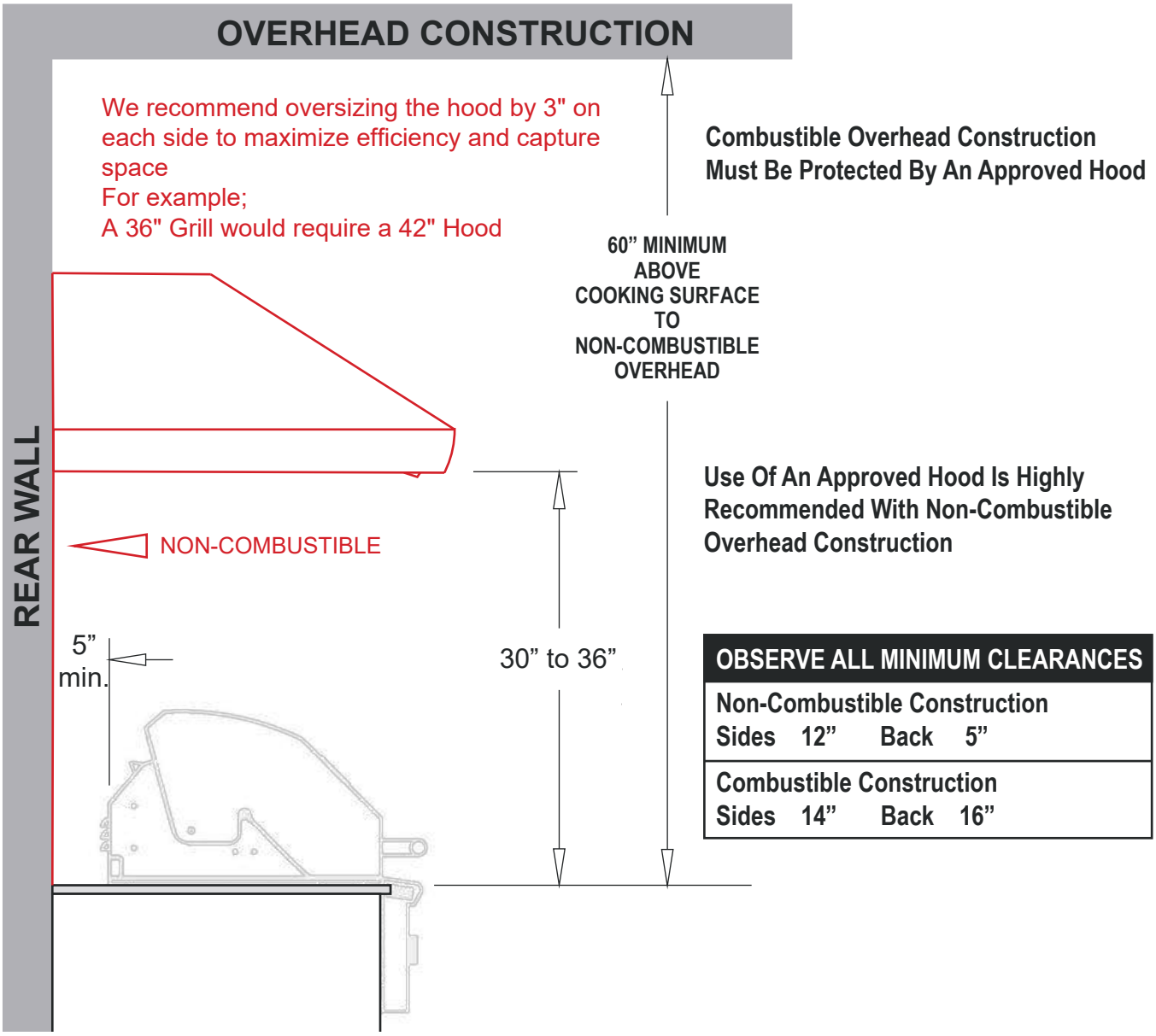

TYPICAL EXHAUST HOOD INSTALLATION

OUTDOOR RATED VENTILATION

AVAILABLE IN 3 SIZES: 36” | 42” | 48”

TWO STYLES: WALL MOUNT and INSERT

WALL MOUNT (XOGV__S):

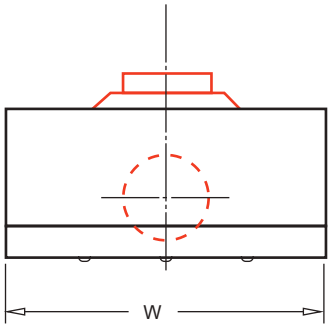

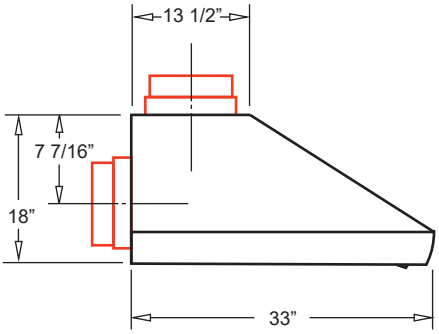

MODEL: XOGV42S
42” Wide - use with XOGRILL32XLT2

MODEL: XOGV48S
48” Wide - use with XOGRILL40XLT2

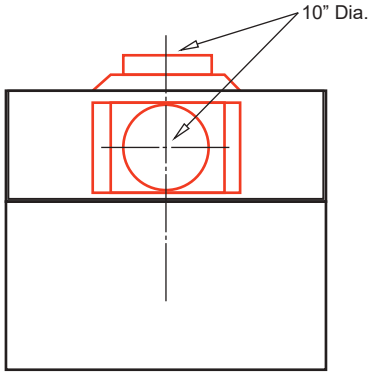

All XOGV Models have the following features:
Top or Rear Venting
304 Stainless Steel Construction
Professional Stainless Steel Baffle Filters
Four LED Lamps
Rotary Controls
Two High Velocity Blowers - up to 1,200 CFM
Matching SS Top Duct Cover

INSERT (XOGVIL__S):

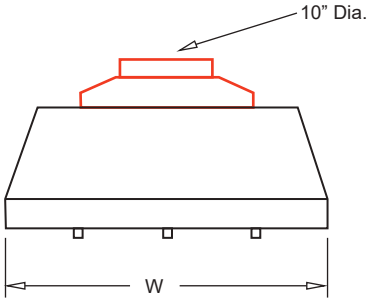

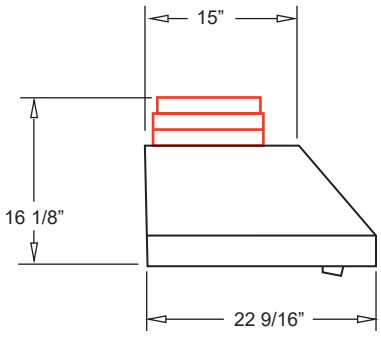

MODEL: XOGILV42S
40 1/2” Wide - use with XOGRILL32XLT2

MODEL: XOGILV48S
46 1/2” Wide - use with XOGRILL40XLT2

All XOGVIL Models have the following features:
Top Venting
304 Stainless Steel Construction
Professional Stainless Steel Baffle Filters
Four LED Lamps
Rotary Controls
Two High Velocity Blowers - up to 1,200 CFM

OUDOOR KITCHEN CUTOUTS

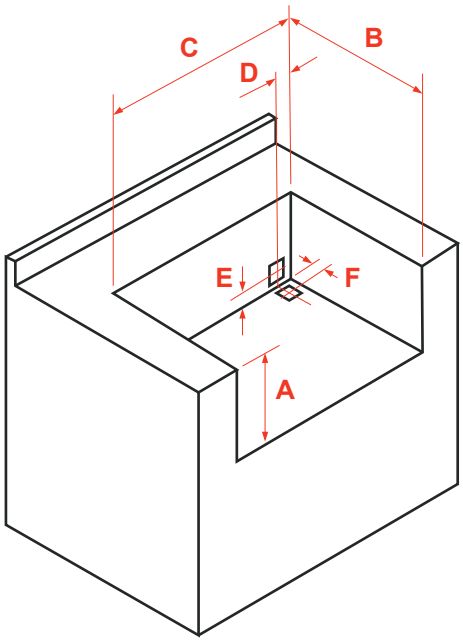

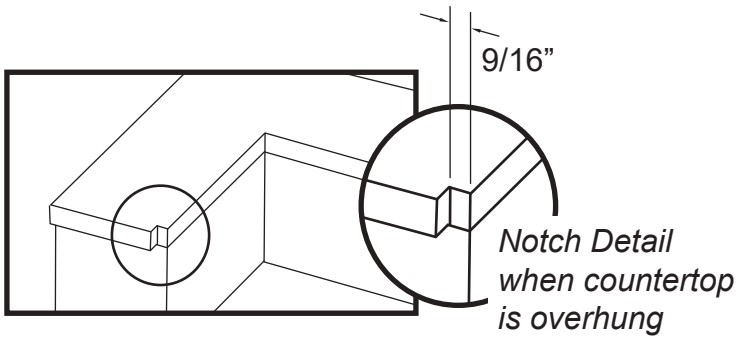

Dimensions **D, E** and **F** define the center lines for 4” x 4” openings for the gas and electrical utilities to be brought in.

CUTOUTS FOR GRILL
NON COMBUSTIBLE CONSTRUCTION

	XOGRILL32XLT2	XOGRILL40XLT2
DIM A	8 1/2”	8 1/2”
DIM B	21 1/4”	21 1/4”
DIM C	30 5/8”	38 3/8”
DIM D	2 3/4“	2 3/4“
DIM E	2 3/4”	2 3/4”
DIM F	2 3/4”	2 3/4”

CUTOUTS FOR INSULATED JACKET
COMBUSTIBLE CONSTRUCTION

Use of an Insulated Jacket is Required

	XOG32JACKETXLT	XOG40JACKETXLT
DIM A	9 1/2”	9 1/2”
DIM B	21 7/8”	21 7/8”
DIM C	33 1/2”	40 3/4”
DIM D	3“	3“
DIM E	3”	3”
DIM F	3 5/8”	3 5/8”

The installation must conform with all local code or, in the absence of local codes, with either the National Fuel Gas code ANSIZ223.1/NFPA 54 or the National Gas and Propane Installations code, CSA B149.1, or the Propane Storage and Handling code, CSA B149.2.

INSULATED JACKET INSTALLATION

IMPORTANT: Before you build the frame, you must take into account the total weight of the jacket, grill, other appliances, countertop and all other finishing materials.

XO Outdoor cooking appliances operate at very HIGH TEMPERATURES. It is absolutely essential to install an insulated jacket whenever combustible materials are used in the construction of your outdoor kitchen. Failure to isolate the cooking appliances within an approved insulated jacket can result in fire, property damage, personal injury or death. Combustible materials include anything which will burn, emit smoke, melt or support combustion.

Refer to the table on page 18 for the correct dimensions to install the insulated jacket..

Determine the entry point for your gas and electrical connections. Create your 4” x 4” rear or bottom utility access based on location requirements.

Use a carpenter’s level to ensure the framing is level both side to side and front to back.

NEVER under any circumstances run the gas line or electrical wiring between the grill and the insulated jacket. All excess electrical wire leads must be pulled out beyond the insulated jacket. Never attempt to install the transformer between the liner and grill.

LINER INSTALLATION
Position the liner in the frame. No part of the combustible construction can protrude above the top or beyond the front surface face of the liner. Shim the liner as necessary.

APPLIANCE INSTALLATION - CAUTION HEAVY LIFT
Remove the grates from the grill to reduce its weight and using two people, place the grill into the liner. The side and rear flanges of the grill are designed to rest on top of the stainless flanges of the liner without additional fasteners. The grill must be able to be removed for maintenance and service, do not grout the grill in place.

FINISHING
If desired the gap, if any, between the jacket and the countertop may be filled with a non-combustible sealant.

CAUTION

- Never install this product into a structure built using combustible materials without an insulated jacket. Doing so risks Fire, Property Damage, Injury or Death.
- Observe and follow ALL set backs and clearances set forth in this manual.
- For outdoor installation only. Never install or operate in an enclosed space.
- Observe and follow ALL overhead clearances set forth in this manual.
- Installation must conform with local codes or, in the absence of local codes, with either the National Fuel Gas Code, ANSI Z223.1/NFPA 54, Natural Gas and propane Installation Code, CSA B149.1, or Propane Storage and Handling Code, B149.2, in Canada.

OUTDOOR KITCHEN VENTING

REQUIRED FOR ALL OUTDOOR KITCHEN INSTALLATIONS

Proper venting is essential for all installations regardless of the materials of construction.

1. Correctly installed venting helps ensure adequate airflow necessary for combustion to take place safely.
2. AND properly installed cross ventilation helps ensure that, in the event of a leak, gas is not trapped within the enclosed space inside.

Gas leakage within a confined space poses an extreme danger of fire and/or explosion.
Adequate cross ventilation is absolutely essential.

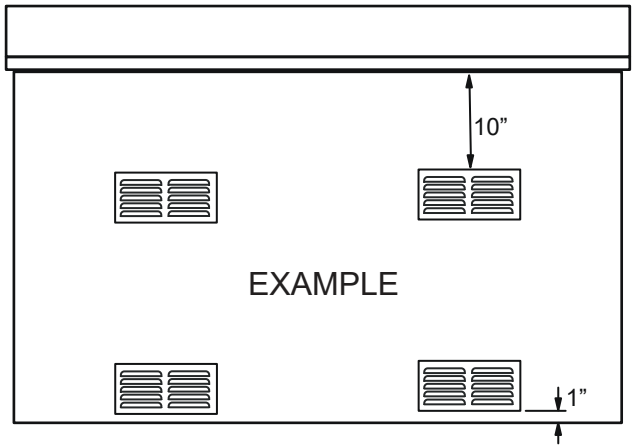

Natural Gas is lighter than air.
Vents should be placed 10” below the countertop.

Propane is heavier than air.
Vents should be placed 1” minimum above ground level.

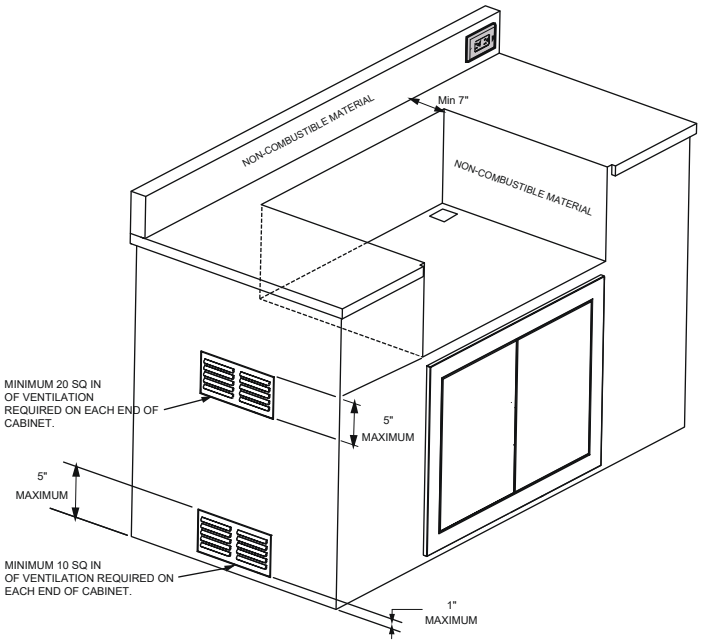

Minimum of three 10 in² (65 cm²) ventilation openings must be provided at the bottom of the back, left and right sides of the enclosure.

Minimum of three 20 in² (130 cm²) ventilation openings must be provided at the top of the left, right and back sides of your enclosure where the top of the opening aligns with the bottom of the grill cut-out.

Vents are required to safely dissipate gas vapors if there is a leak in your enclosure.

ELECTRICAL HOOK UP

The Halogen and LED lighting system is powered by a 60W transformer included with the grill. It must be mounted with the three prong cord set pointing down so the grill wiring harness connects at the top screwing in place to make a water tight connection. All wiring must be routed away from all hot surfaces and gas lines.

NOTE: In order for the rotisserie, LED and halogen lights to work the rotisserie motor and grill must each be plugged into a properly grounded GFCI outlet installed by an electrician.

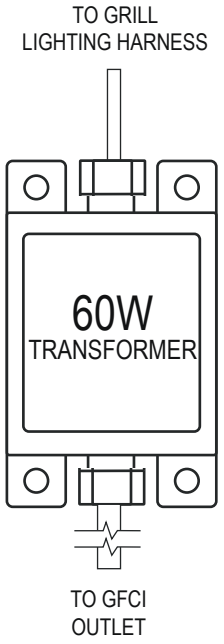

The Flame Thrower Ignition system does NOT require an electrical connection.

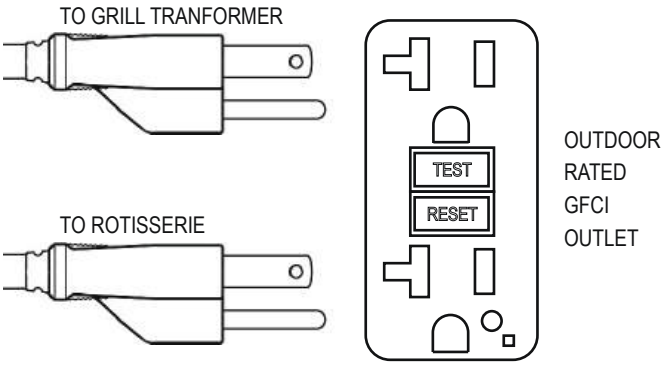

The transformer comes with a 63” long cord - The lead length coming from the grill is 48”

WARNING ELECTRICAL SHOCK HAZARD

Product installation must meet local electric codes or, in the absence of local codes, the latest edition of the National Electrical Code ANS/ NFPA No. 70 or the Canadian Electrical Code CGA 1.6b2005.
Use only a Ground Fault Interrupter (GFI) protected circuit with this outdoor cooking gas appliance.
Use only extension cords with a 3 prong grounding plug, rated for the power of the equipment, and approved for outdoor use with a “W-A” marking.
To protect against electric shock, do not immerse any part of the power cord, an extension cord or any plugs in water or other liquid.
Do not permit electrical cords to hang over the edge of the counter or to touch hot surfaces.
IMPORTANT: When using the rotisserie, attach the motor to the grill before plugging it in.
Unplug the Rotisserie from the outlet when not in use and before cleaning. Allow it to cool before putting on or removing parts.
Never use an outdoor cooking appliance for other than its intended purpose.
Do not operate any appliance with a damaged electrical cord or plug.
Unplug and do not use any appliance which has malfunctioned or been damaged in any way before contacting the manufacturer.

ELECTRICAL HOOK UP

The Halogen and LED lighting system is powered by a 60W transformer included with the grill. It must be mounted with the three prong cord set pointing down so the grill wiring harness connects at the top screwing in place to make a water tight connection. All wiring must be routed away from all hot surfaces and gas lines.

Shown below is a schematic of the wiring harness

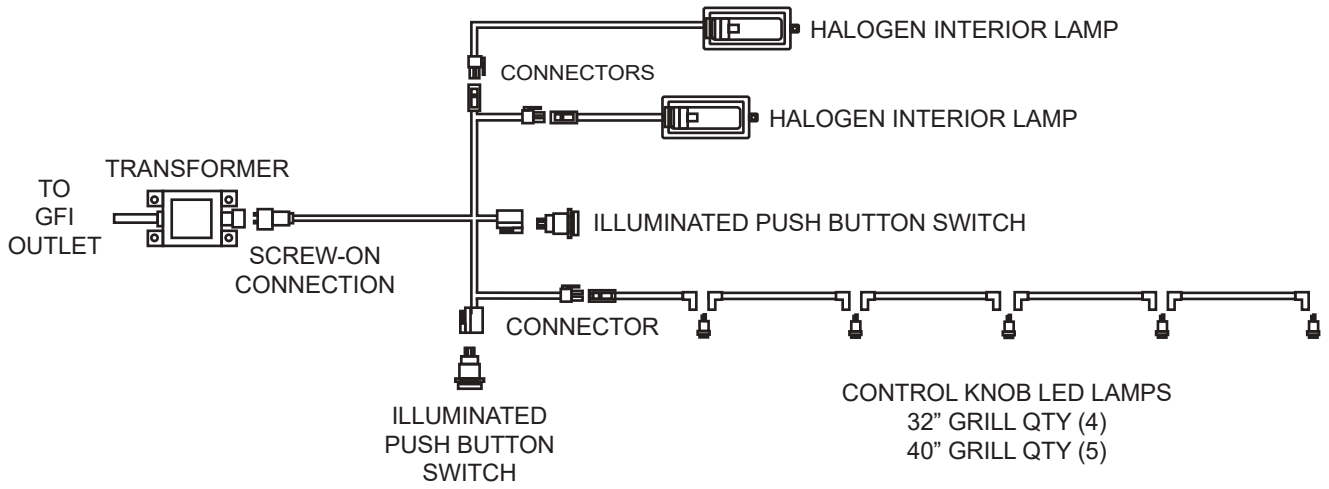

The transformer comes with a 63” long cord - The lead length coming from the grill is 48”

Should bulb replacement become necessary, please refer to the maintenance section of this manual.

When installing your grill in a cart, threaded holes are located on the interior back wall of the cart to securely mount the transformer. Consult the cart assembly instructions for complete information.

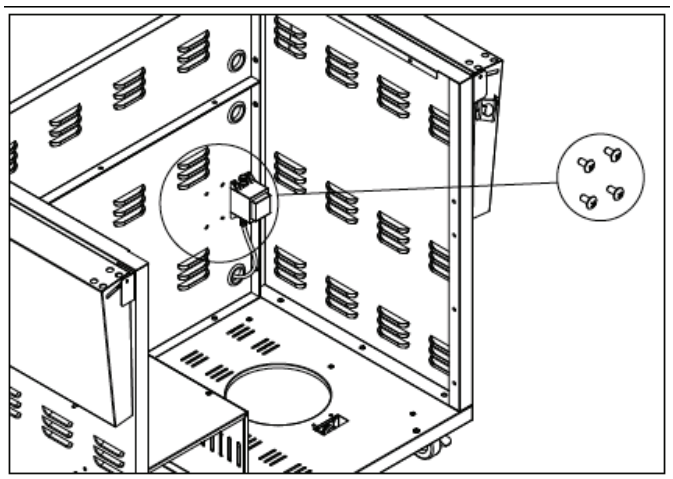

BEFORE CONNECTING TO YOUR GAS SUPPLY

WARNING

WARNING FIRE HAZARD

Your XO gas grill is designed for use with either Natural Gas or Propane (LP).

HOWEVER, it must be set up correctly to use one or the other fuel.
Different fuels cannot be used interchangeably.

Operation using natural gas requires different burner orifices and a different regulator set up than for propane and vice versa. If your grill has been set up for to use one type of fuel and you wish to power it with the other fuel - the appliance must be converted for that use. Gas conversion must only be performed by an experienced gas appliance technician.

Every gas installation must include a readily accessible emergency shut off valve close to the grill. The valve should be at the gas supply source outdoors after the gas line exits the outer wall of the house and before it connects to the flex line or QD line. If the gas line is to be buried, it should connected before it enters the ground. It is highly recommended that the valve have the ability to lock when closed to prevent accidental opening. Any locking or sercurity device cannot interfere with the ability to rapidly close the valve in an emergency. Some locations require this locking feature by code.

XO Grills are shipped as specified by the customer set up for use with Natural Gas or Propane. This is designated by the last letter of the model number. Confirm the correct fuel type before installation.

If the model number ends with "L" the unit has been set up to burn Propane.
If the model number ends with "N" the unit has been set up to burn Natural Gas.

In either case, the unit is shipped with the appropriate regulator. Natural Gas regulators operate with an outlet pressure of 4 " W.C. and Propane regulators operate at 11" W.C., They are not interchangeable.

All threaded fittings must be properly sealed with pipe compound or tape with has been approved for use on gas systems. All connections must be leak tested either with a leak detector or by performing a bubble test using a 50/50 mixture of liquid soap and water. This method is fully explained in this manual.

During gas system pressure testing, (equal to or exceeding 1/2 PSI - 3.5 KPa), the gas grill must be disconnected from the supply using the isolation shut-off valve.

BEFORE CONNECTING TO YOUR GAS SUPPLY

WARNING

WARNING FIRE HAZARD

Regardless of whether you are powering your grill with Propane or Natural Gas - Leak Testing of all connections and components is an essential step to ensure the safe use of the appliance.

Leak testing is easy to do and MUST be performed: Before the First Use, whenever a gas line supply component (such as a propane tank) is changed, whenever a gas leak is suspected, or once a year as general maintenance.

PERFORMING A LEAK TEST - Either with a leak detector or by the simple method below:

Prepare a mixture of 50% liquid dish soap and 50% water.

Remove or extinguish all open flames or potential ignition sources - **NO SMOKING** - whenever gas may be present. **NEVER** test for the presence of gas using a match or open flame.

Sparks or open flames may ignite a fire or explosion resulting in property damage, personal injury or death!

Ensure that all control knobs are in the OFF position.

Open the local gas supply valve (either at the propane tank or natural gas line)

Using a spray bottle or brush, liberally coat ALL the gas line connections, hoses, manifolds, regulators and valves.

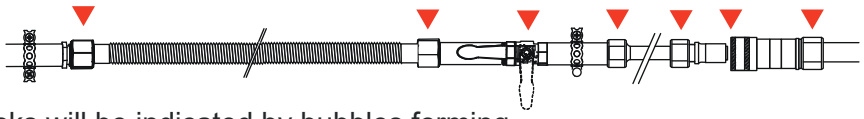

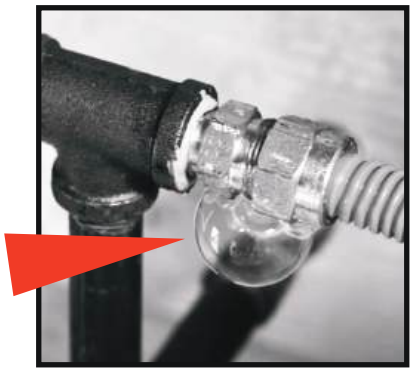

Gas leaks will be indicated by bubbles forming.

If this occurs, **IMMEDIATELY SHUT OFF THE GAS!**

FIXING A GAS LEAK:

After shutting off the gas, turn all control knobs “ON” to purge gas from the system.

Wait several minutes - then turn all control knobs to the “OFF” position.

With a damp cloth, wash the residual soapy solution from the gas line and let dry.

Tighten the loose fitting or replace the leaking component with a Manufacturer approved part.

Repeat the leak test above.

If the unit fails the leak test a second time - **STOP** - Shut the gas **OFF** and call for a professional service technician - **DO NOT ATTEMPT TO USE THE GRILL UNTIL REPAIRED.**

GAS SUPPLY HOOK UP - CONTINUED

WARNING

WARNING FIRE HAZARD

The Natural Gas Regulator and 1/2F to 1/2M brass connection is included with the gas grill. Always use a Professional Installer when connecting to your gas line. The gas regulator which is included is set up for natural gas but can be converted for use with propane. This conversion must be performed by an experienced professional technician.

The gas grill manifold ends in a 1/2" male thread and has a "Grip Nut" for a wrench. When tightening these fittings, two wrenches are required. One to hold the Grip Nut and prevent it from moving while the other wrench turns the opposing fitting. Failure to employ two wrenches this way places an undue strain on the manifold and can cause damage and/or result in leaks.

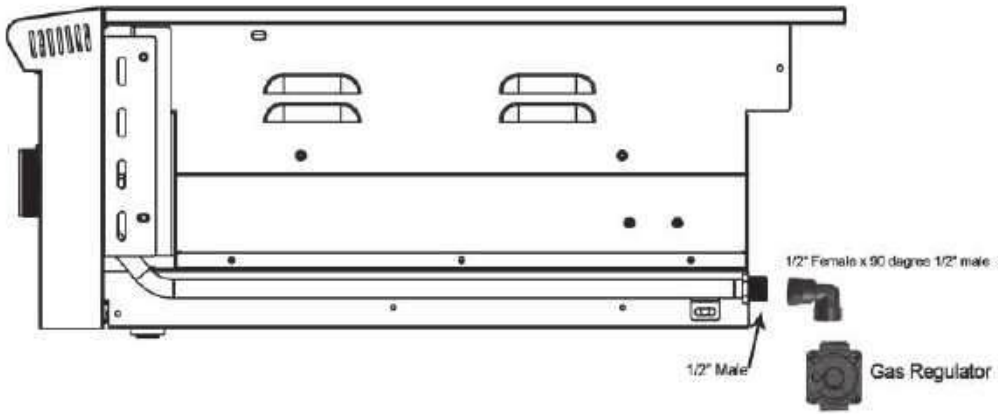

Always use two wrenches to tighten gas fittings

Use plumbers putty or gas tape on the male threads to seal the male threads to seal the connection.
Do NOT use sealant or tape on the flare side of a connector.

Connect the gas regulator and make certain the “IN” and “OUT” are oriented correctly. This is marked in the casting. Gas will only flow in one direction. A gas flex line or hose can be used to make the final connection to the house supply line.

IMPORTANT:
An XOLQD Hose may only be used for FREESTANDING Grills.
Permanent installations MUST use SS Flex Line.

FINAL PIPING MUST INCLUDE A LOCKING 1/4 TURN SHUT OFF VALVE OUTSIDE, LOCAL TO THE GRILL FOR EMERGENCIES.

ALL CONNECTIONS MUST BE LEAK TESTED PRIOR TO THE FIRST USE.

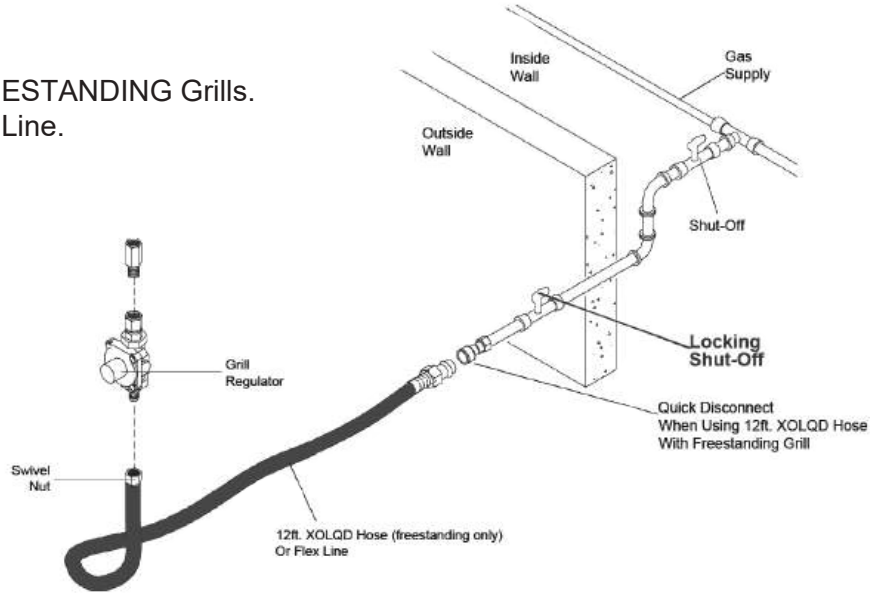

HARD PIPING NATURAL GAS SUPPLY

WARNING

WARNING FIRE HAZARD

Only a licensed gas professional must perform the required gas fitting on XO gas appliances. To ensure satisfactory performance, the gas supply line must be sized to accommodate the total BTU/h requirements of all the gas-fired equipment that will be connected to that line. In no case should pipe less than 3/4" inside diameter or 1" outside diameter ever be used to connect this product.

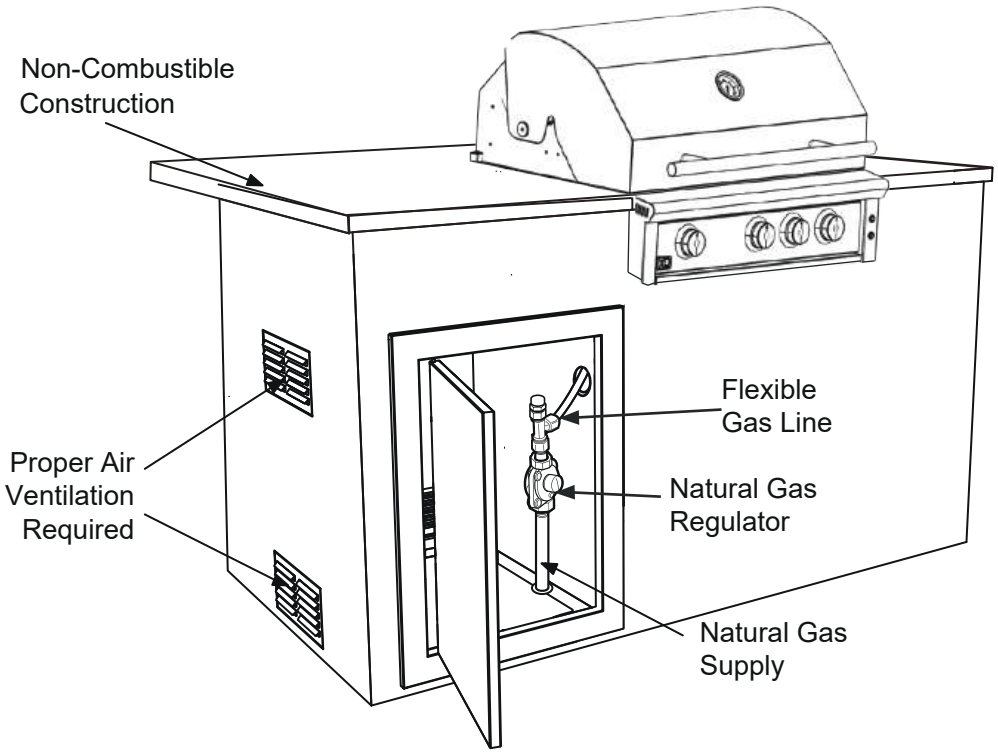

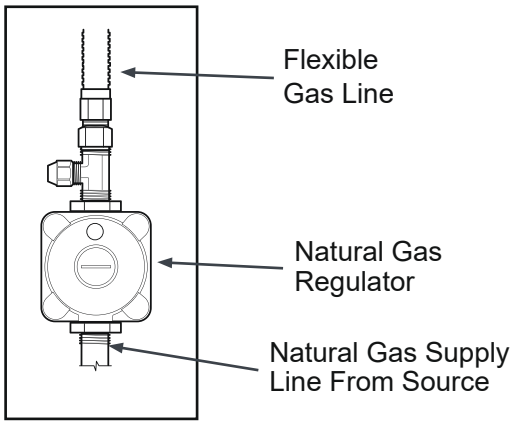

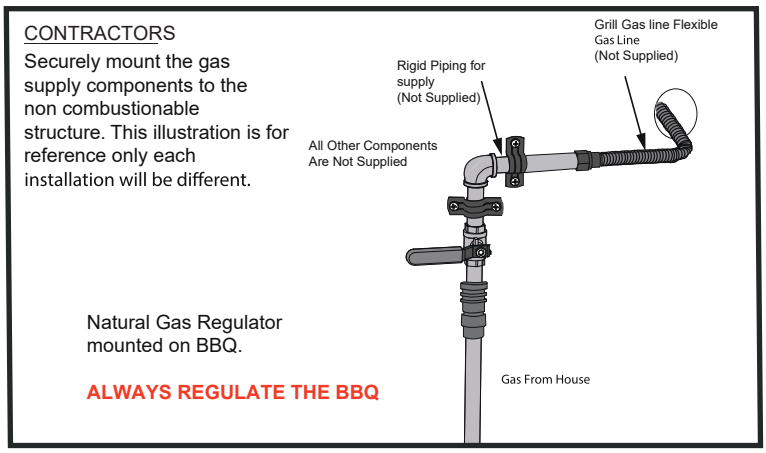

LP TANK SAFETY

LP Gas grill models are designed to use a standard 20lb. Liquid Propane Gas (LP Gas) tank, sold separately. This is a tank approximately 12” in diameter and 18-1/2” tall. This section deals with tanks of this type. If connecting to a bulk LP supply system, you must follow guidelines similar to a natural gas hard piping system - consult your propane supplier.

The 20lb. tank described above must have an Overfill Prevention Device, “OPD”, installed. This is a safety device which prevents filling the cylinder beyond its rated capacity, which can cause the LP tank to malfunction.

The LP Gas tank must be constructed and marked in accordance with the Specifications for LP-Gas Cylinders of the U.S. Department of Transportation (D.O.T.) or the National Standard of Canada, CAN/CSA-B339, Cylinders, Spheres and Tubes for Transportation of Dangerous Goods, and Commission: as applicable.

The LP Gas tank must have a shutoff valve, terminating in an LP Gas supply tank valve outlet, that is compatible with a Type 1 tank connection device. The LP Gas tank must also have a safety relief device that has a direct connection with the vapor space of the tank. The tank supply system must be arranged for vapor withdrawal.

The LP Gas tank must have a collar to protect the tank valve. Never connect an unregulated LP gas tank to your gas grill. The gas regulator assembly supplied with your gas grill is adjusted to have an outlet pressure of 11" water column (W.C.) for connection to an LP gas tank. Only use the regulator / hose assembly supplied with your gas grill. Replacement hose / regulator assembly must be identical to those listed in the parts list of this Operating Manual as specified by XO.

Have your LP Gas dealer check the release valve after every filling to ensure it remains free of defects. Always keep LP Gas tank in upright position. Do not subject the LP Gas tank to excessive heat. Never store an LP Gas tank indoors. If you store your gas grill in the garage always disconnect the LP Gas tank first and store it safely outside. LP Gas tanks must be stored outdoors in a well-ventilated area and out of the reach of children. Disconnected LP Gas tanks must not be stored in a building, garage or any other enclosed area.

The regulator / hose assembly can be seen by opening the cart or island doors. They must be inspected before each use of the grill. If the hose is damaged in any way, it must be replaced prior to using the grill. The gas grill is set up to operate with an LP gas cylinder equipped with an OPD (overfilling prevention device).

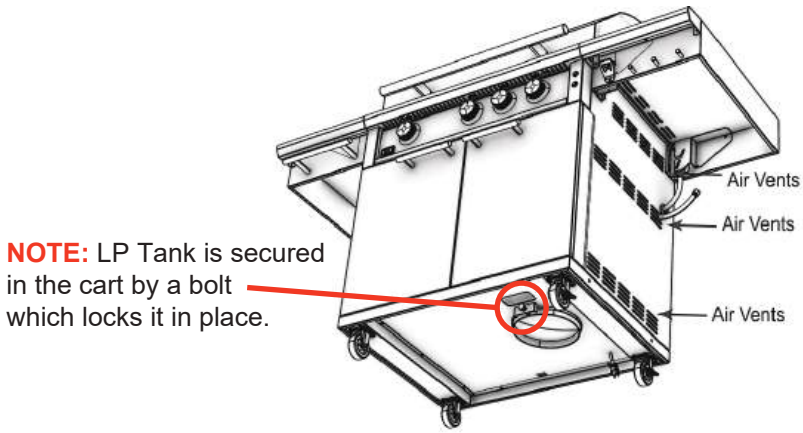

The grill cart has air vents on three sides to allow for the release of excess vapor.

SAFETY NOTICE
Always shut the tank valve when not in use.

Excessive heat can cause vapor to be released from the cylinder when not in use.

PROPANE TANKS - CONTINUED

WARNING

Never connect any appliance directly to a gas line. The correct pressure regulator must be installed on all gas equipment. **All local codes require it.** XO supplies the correct regulator with your grill. Failure to install or removal of the gas regulator supplied with your grill can result in fire and/or serious personal injury. It will also void the equipment warranty. Do not use any gas regulator/assemby except the one supplied for your unit by XO.

WARNING

- When not in use - shut the gas valve OFF at the tank.
- Never store spare propane tanks under or near the grill.
- If storing the grill indoors - remove the propane tank.
- Use only the valve dust cap supplied with disconnected tanks.
- Tanks must be stored outdoors in a secure, well ventilated area.
- Never fill propane tanks beyond 80% of their rated capacity.
- Hand tighten the regulator coupling nut - Do not over tighten.

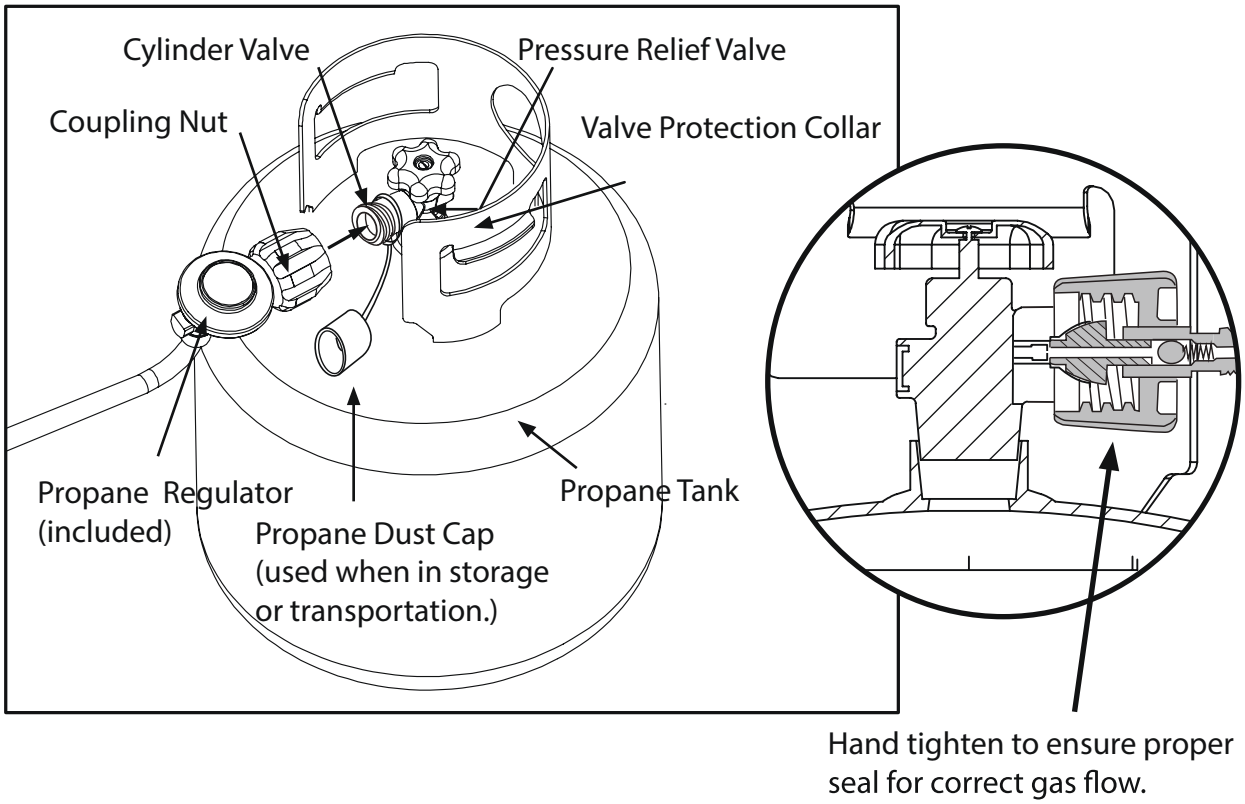

GRILLING SAFETY

NEVER leave the grill unattended..

NEVER operate a grill that has not successfully undergone a leak test.

Prior to the first use - make certain that all packing materials and tie downs have been removed from the interior of the grill, the grates have been washed and given a light coat of canola oil.

Avoid wearing loose-fitting garments while grilling.

Assume all surfaces are hot. Do not touch the grill racks, hood or immediate surrounding metal surfaces with bare hands - these areas become extremely hot during use and could cause burns.

Use an insulated glove or mitt when opening and operating the grill.

Open the grill hood slowly to allow heat and smoke to escape before fully opening.

Open the grill hood fully when lighting.

Never lean over hot grill surface or look directly into the grill when lighting.

Do not heat unopened food containers.

Do not use aluminum foil to line any part of the grill. Severe damage can result and void your warranty.

Never use charcoal in this gas grill.

Excessively fatty foods can cause flare-ups. Damage caused as a result of unsupervised use or flare-ups will void the warranty.

Never grill without the drip pan in place. Failure to ensure that the drip pan is properly inserted can result in a grease fire.

Grease is extremely flammable. Let hot grease cool down completely before disposing of it.

The drip tray should be cleaned after every use.

Before grilling, lightly oil the grates with canola before lighting the burners and preheat for 10 minutes for best peformance.

NEVER operate the grill under the influence of alcohol or drugs.

LIGHTING THE BURNERS | CONTROLS

The second knob from the right controls the rear InfraRed burner used for indirect and rotisserie cooking, the remaining knobs each control one of the main burners.

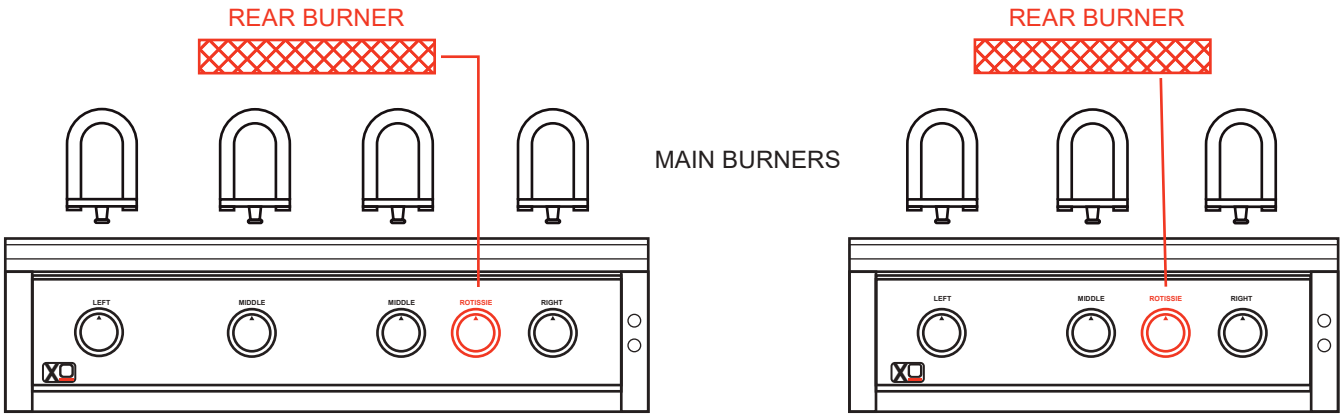

XOGRILL40XLT2
(4) Main Burners
(1) Rear IR Burner

XOGRILL40XLT2
(3) Main Burners
(1) Rear IR Burner

IGNITION POSITION

With the hood open - Push and hold the knob in to start the flow of gas.

After 2 seconds, while holding in, turn slowly 1/4 Turn to the left.

You will hear the loud Click of the igniter.

Look to see the burner is fully lit.

If the burner does not light, turn the knob OFF wait 5 minutes until the gas is fully dissipated and repeat.

Always make certain all knobs are in the OFF position when finished cooking.

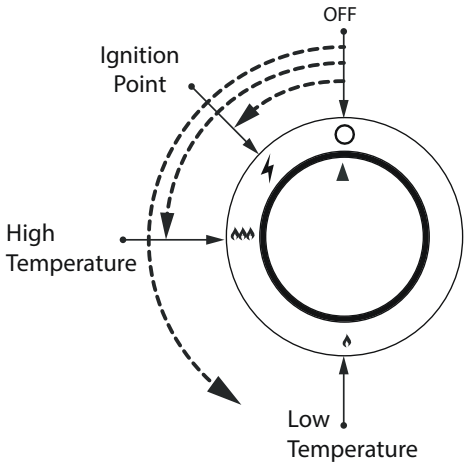

LIGHTING THE BURNERS

LIGHTING THE MAIN GRILL BURNERS:

1. Open grill hood. DO NOT ATTEMPT TO LIGHT THE GRILL WITH THE HOOD CLOSED.
2. Check to ensure that all burner control knobs are set to OFF.
3. Turn on main gas supply.
4. Push in and hold knob for 2 seconds
5. After 2 seconds, while holding the knob in, turn the knob counterclockwise 1/4 turn.
   You will hear the "CLICK" and the burner will ignite. Release knob.
6. If burner does not light, turn knob to OFF, wait 5 minutes for gas to dissipate, and repeat step 4.

LIGHTING THE REAR INFRARED BURNER:

1. Open grill hood. DO NOT ATTEMPT TO LIGHT THE GRILL WITH THE HOOD CLOSED.
2. Check to ensure that all burner control knobs are set to OFF.
3. Turn on main gas supply.
4. Push in and hold knob for 2 seconds
5. After 2 seconds, while holding the knob in, turn the knob counterclockwise 1/4 turn.
   You will hear the "CLICK" and the burner will ignite. Release knob.
   Continue to hold the knob in for 30 seconds until the burner ignites completely, then release.
6. If burner does not light, turn knob to OFF, wait 5 minutes for gas to dissipate, and repeat step 4.

IF BURNERS ARE NOT IGNITING AFTER TWO ATTEMPTS - YOU CAN ATTEMPT TO LIGHT THE BURNERS MANUALLY AFTER WAITING 5 MINUTES FOR GAS TO DISSIPATE.

IF THE BURNERS STILL WILL NOT LIGHT - SHUT OFF THE GAS SUPPLY & CALL FOR SERVICE

Always preheat the grill for best results.

Before beginning - wipe the top of the grates with a light coating of a high temperature oil like canola.
To preheat the grill, light all main burners and set to HIGH. Close the hood and preheat for 10-15 minutes, or until the grill reaches desired temperature.
After preheating, turn off all burners not required, carefully open the hood, and adjust remaining burners to desired temperature.
Do not leave the grill unattended during the preheat cycle or at any time while the grill is in use.
Do not allow grill to preheat for prolonged periods of time. Overheating the grill can cause damage to the grill and personal property.

WARNING

- Always keep the hood open when lighting the grill.
- Never leave children unsupervised around the XO grill.
- Do not store items of interest to children around or below the grill or in the cabinets.
- Never allow children to crawl inside a cabinet or enclosure.

CAUTION

- Never light the grill if you smell gas.
- Keep face and body parts away from the grill when lighting.
- Never leave the grill unattended

MANUALLY LIGHTING THE BURNERS

MANUALLY LIGHTING THE GRILL BURNERS:

1. Open the hood and wait five minutes to allow any accumulated gas to dissipate.
2. Keep your face as far away from the burners as possible.
3. Light and insert a long-stem match, holding it near the Lighting Tube on the left side to light the main burner or the right hand side of the rear burner.
   When lighting the rear burner continue to hold the flame next to the thermocouple until the burner is glowing.
4. Slowly rotate the burner knob for the burner you are lighting counter-clockwise to the high position.
5 If the burner does not light after five seconds, turn the control knobs to the OFF position and wait five minutes until the gas clears before attempting to re-light.
6. If the burner does not light after several attempts, immediately close all gas valves and consult an authorized authorized service technician.
7. To shut off the burners, rotate the knob and turn to OFF.
8. It is normal to hear a popping sound when the burners are turned off.

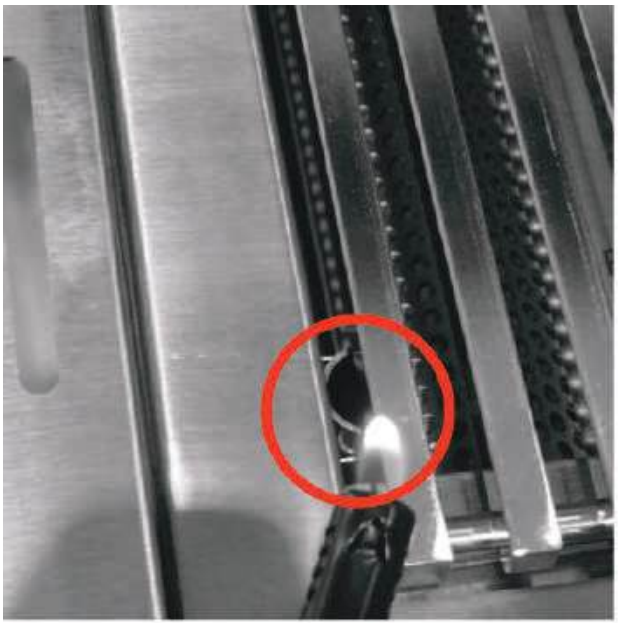

MANUALLY LIGHTING MAIN BURNER

MANUALLY LIGHTING REAR BURNER

WARNING

- Never attempt to light a burner if you smell gas.
- Alway keep the hood open when attempting to light a grill.
- Releasing fuel into a closed grill before lighting will increase the risk of explosion, property damage, personal injury or death.
- Keep your face and body as far from the grill as possible when lighting. Any time a burner doesn't light within 5 seconds, turn off the control, wait 5 minutes for gas to dissipate, and repeat the lighting procedure.
- NEVER LEAVE THE GRILL UNATTENDED WHILE COOKING.

GRILLING TIPS

TEMPERATURE SETTINGS

HIGH Setting - Use this setting only for fast warm-up, for searing steaks and chops, and for burning food residue from the cooking grates when done.
MEDIUM Setting - Use this setting for most grilling, roasting or baking, and for cooking hamburgers and vegetables.
LOW Setting - Use this setting for smoking, rotisserie cooking, and when cooking very lean cuts such as fish.

COOK FOOD TO PROPER TEMPERATURES

Cooking food safely requires that you raise the internal temperature of the meat high enough and for a long enough period of time to kill any food-borne bacteria that may cause illnesses. Color is not the best indicator that food is safe to eat. Use a high-quality probe thermometer to be sure your food is properly cooked. Place the tip of an instant-read thermometer into the center of the thickest part of the food but at least 1/2 inch deep. Read the temperature after about 10 seconds. Follow the temperature guidelines for the type of food you are cooking. The following guidelines are from the U.S. Food and Drug Administration Center for Food.

COOK TO INTERNAL TEMP			
Meat And Poultry	Medium Rare	Medium	Well Done
Fresh Beef - Medium Rare	145°F	160°F	170°F
Ground Turkey, Chicken	165°F		
Ground Veal, Beef, Lamb, Pork	145°F with 3 minutes of rest and then turn		
Fresh Pork - Medium		160°F	170°F
Chicken - Whole	165°F		
Turkey - Whole	165°F		
Poultry Breasts, Roast	165°F		
Poultry Thighs, Wings	165°F		
Stuffing (Cooked Alone Or In Bird)	165°F		
Duck And Goose	180°F		
Fresh Veal - Medium Rare	160°F		
Fresh Lamb - Medium Rare	145°F	160°F	170°F
Ham - Fresh (Raw)	145°F	160°F	170°F
Ham - Pre-Cooked (Reheat)	140°F		
SEAFOOD			
Fish	Cook until flesh turns opaque and flakes easily with a fork.		
Shrimp, Lobster, Crab	Cook until shells turn red and flesh becomes pearly opaque.		
Scallops	Should turn milky white or opaque and firm		
Clams, Mussels, Oysters	Cook until shells open.		

*The above temperature settings are a guide, the temperatures may vary due to wind and outside ambient temperatures

GRILLING METHODS

DIRECT COOKING

Direct cooking involves placing food on the grates over direct heat. Use this method for foods that take less than 20 minutes to cook or use it to sear larger items before or after indirect cooking. Place the food to be cooked directly on the preheated grates above firing burners and leave until they no longer stick. Turning too soon and too often are the most common grilling mistakes. Use a meat thermometer to gauge when they are done and remove items one degree below your desired temperature, will continue to rise slightly as they rest before carving and consuming.

INDIRECT COOKING

The indirect cooking method is a popular alternative to direct heat grilling. Indirect cooking uses heat from adjacent burners to cook food and, in many cases, this reduces the potential to overcook or overly brown food. The most common uses are for items that benefit from slower cooking such as breads or thicker cuts of chicken or roasts. Indirect cooking involves placing the food on grates above burners that are off and closing the grill hood to create an oven effect. Items you usually oven-roast can be grilled to perfection using indirect heating. Preheat the burners surrounding the food to be cooked. Place a basting pan below the grates directly on the flame tamers under the food containing water or marinade to prevent the natural juices from burning or evaporating. Indirect cooking can also be achieved using the second rack while direct cooking.

ROTISSERIE COOKING

Rotisserie is primarily used to slow cook large pieces of meat and poultry. Constant turning provides a self-basting action, making food cooked on a rotisserie exceptionally moist and juicy. Rotisserie cooking generally requires 1 ½ to 4½ hrs to cook depending on the size and type of meat being cooked. You can have rotisserie cooking with indirect heat or with the rear infrared rotisserie burner. The meat should be centered and balanced as evenly as possible on the spit rod to avoid overworking the rotisserie motor. Since indirect heat is often used cooking on a rotisserie, a basting drip pan is advisable to prevent excessive flare-ups. Generally, the cooking grates are removed to allow for greater swing of the rotisserie.

Your XO XLT grill is equipped with a rear infrared burner. Optional rotisserie kits are available for purchase separately.

Use XOGROTIS32XLT for grill model XOGRILL32XLT2

Use XOGROTIS40XLT for grill model XOGRILL40XLT2

CAUTION: Remove secondary rack to prevent interference with the turning spit.

CLEANING AND MAINTENANCE

GENERAL GRILL CLEANING AND MAINTENANCE

Proper care and maintenance will keep your grill in top operating condition and prolong its life. Follow these cleaning procedures on a timely basis and your grill will stay clean and operate with minimal effort.

CAUTION: MAKE CERTAIN THE GRILL IS OFF AND COMPLETELY COOL BEFORE PROCEEDING.

CLEANING THE COOKING GRATES

Before initial use, and periodically thereafter, wash your Cooking Grids in a mild soap and warm water solution. Use a wash cloth or vegetable brush to scrub them clean. After washing and before cooking, apply a light coating of a high temperature cooking oil like canola to the grate surface.

CLEANING THE FLAME TAMERS

Periodically wash the Flame Tamers in soap and warm water using a vegetable brush to remove stubborn burnt-on cooking residue. Dry the Flame Tamers thoroughly before you reinstall them.

CLEANING THE DRIP TRAY

To reduce the chance of fire, the drip tray should be visually inspected before each grill use. Remove any grease and wash drip tray with a mild soap and warm water solution.

CLEANING INSIDE THE GRILL HOOD

Grease can build up on the inside of the hood over time and can drip outside the grill when opened. Visually inspect the inside of the hood before each use. Remove any grease and wash with a mild soap and warm water solution.

ROUTINE CLEANING OF THE GRILL INTERIOR

Burning-off excess food after every cookout will keep it ready for instant use. However, at least every 6 months you must give the entire grill a thorough cleaning to minimize risk of grease fires and keep your grill in top shape.

FOLLOW THESE STEPS:

1. Turn all control knobs off and turn off the gas supply (LP or Natural Gas)

2. Remove and clean the grates, flame tamers, warming rack, zone dividers and burners.

3. Scrape out and brush debris from the inside and bottom of the fire box. Then wash the interior with a fiber pad or nylon brush and a mild soap and warm water solution - rinse thoroughly and allow to dry.

4. Check all orifices for any obstructions.

5. Replace the burners, ensuring they are correctly centered on and overlapping each orifice.

6. Replace the flame tamers, zone dividers, warming rack and grates

7. Brush all vents, whether in a cart or built-in installation, free of any dirt or debris.

8. Reconnect the gas, leak test, ignite the burners and check the flame for correct operation.

CLEANING AND MAINTENANCE

CARING FOR STAINLESS STEEL

Common conditions that cause the corrosion or discoloration of stainless steel:

1. Oxidation - Here are a few steps to bring your stainless appliances back to “like new” condition. Apply clean water with a cleaning sponge and rub gently in the direction of the grain. If the mark won’t shift, it may be necessary to use a stainless steel cleaner. Apply the cleaner and rub gently. After cleaning it is important to rinse the stainless steel with clean fresh water and buff with a soft coth, always rubbing with the grain. Rubbing across the grain can damage the finish and the stainless will lose its shine.

2. Chloride containing cleansers - this includes bleach and any cleaners containing bleach.

3. Muriatic acid (hydrochloric acid) - commonly used to clean up after tile/concrete installation.

4. Concentrated soap residue - chemical additives will cause discoloration / some dried soaps resemble rust.

5. Water with high iron content - can leave a rusty residue, especially if allowed to drip continuously.

6. Contact with iron materials - such as steel wool, iron residue from installation or cleaning of other steel products.

7. Don’t allow trapped moisture between the product and cover - rubber mats, metal cans or cleaning products can also trap moisture. Allow cabinets to completely dry before covering.

8. Salts - contain chlorides

9. Extreme Heat by Flame

10. Acids - Do not permit liquids like citrus or tomato juice to remain on stainless steel surfaces. Wash regularly with clean fresh water, mild detergent and a microfiber cloth. After washing rinse with clean water and wipe the surface dry with a microfiber cloth. Be certain to go with the grain on brushed stainless steel. Generally you should wash your stainless steel every three months. In those areas where the grill is exposed to high salt concentrations such as coastal regions or chlorine near swimming pools, your stainless should be washed at least every two weeks. Failure to maintain the finish in such environments will lead to tea staining and corrosion. A thin coating of protectant on the surface is highly recommended in such cases.

11. Avoid all abrasive cleaners, steel wool or abrasive cloths as they will scratch the surface.

CLEANING AND MAINTENANCE | BURNERS

Before removing the burners ensure the gas is shut off and the knobs are in the “OFF” position. Make certain the grill has cooled before proceeding.

TO REMOVE BURNERS:
Begin by removing all the grates, flame tamers and zone dividers. Make certain that any cotter pins or tie downs which hold the burner in place during shipping have been removed. Grasp the burner, tilt and lift up the far end of the burner while pushing it toward the back of the grill. The burner head will come off the brass orifice at the front. Carefully remove making certain not to upset the air shutter position.

BURNER CLEANING:
To maximize grill performance, clean the exterior of the burner with a wire brush. Clear stubborn scale with a metal scraper. Clear any clogged ports with a straightened paper clip. Never use a wooden toothpick as it may break off and clog the port. Shake out any debris through the air shutter. Use a flashlight to inspect the burner inlet to ensure it is not blocked. If obstructions can be seen, use a bent metal wire coat hanger to clear them.

BETTER AIR ADJUSTMENT:
Each grill burner is tested and adjusted at the factory prior to shipping, however, variations in the local gas supply or a conversion from one gas to another may make it necessary to adjust the burners. The flames of the grill burners should be visually checked, adjusting the air shutter by opening the air shutter and slowly closing it until the flame starts to yellow. STOP, and turn back 1/16", and tighten the screw. The flame should be blue with yellow tips when adjusted correctly.
IF YOU ARE UNSURE OF HOW TO PROPERLY MAKE THESE ADJUSTMENTS CALL FOR SERVICE.

WARNING

In reinstalling the burners, it is critical to center every burner on its orifice. If this is not done properly there is a possibility of fire and/or explosion.

CAUTION

For safe operation, make sure the Orifices are centered inside the Burner Tubes before using your grill. See figure. If the Orifice is not inside the Burner Tube, lighting the Burner may cause explosion and/or fire resulting in serious bodily injury and/or property damage.

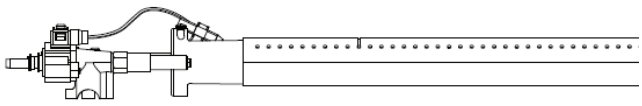

Please Note that the air mixture for LP gas and NG is different. Your gas grill will come preset for your gas type. If you find that you are not getting the best flame the air shutter can be adjusted to improve the oxygen/gas mix. I you are unsure of how to perform this adjustment - **STOP** and call for service.

CLEANING THE BURNERS - CONTINUED

WARNING: READ AND FOLLOW ALL SAFETY PRECAUTIONS

Spiders and small insects can spin webs and nest in the grill burner venturi which can lead to a gas flow obstruction resulting in a fire in and around the burner tubes. This type of "FLASHBACK FIRE" can cause serious grill damage and create an unsafe operating condition for the user.
To reduce the chance of FLASHBACK FIRE you must inspect and clean the venturi at least twice a year in summer and fall, whenever spiders are active in your area, or if your grill has not been used for an extended period of time.
Remove the pin from the rear of each burner tube using needle nose pliers. Carefully lift each burner up and away from the gas valve orifice. Check the burner venturi tubes for insects and nests. Clean as shown below. A clogged tube can lead to a fire beneath the grill.

FOR CLEANING, REFER TO METHODS 1-3 BELOW:
METHOD 1: Bend a stiff wire or wire coat hanger into a small hook as shown and run the hook through the Burner Tube and inside the Burner several times to remove debris.
METHOD 2: Use a bottle brush with a flexible handle and run the brush through the Burner Tube and inside the Burner several times to remove any debris.
METHOD 3: Use an air hose to force air through each Burner Tube. The forced air should pass debris or obstructions through the Burner and out the Ports. This method should only be performed by a certified and qualified BBQ technician.

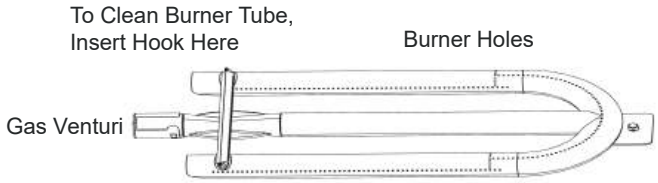

For safe operation ensure the Gas Valve Assembly Orifice is inside the Burner Tube before using your grill. (See figure above). If the Orifice is not inside the Burner Tube, lighting the Burner may cause an explosion and/or fire resulting in serious bodily injury and/or property damage.

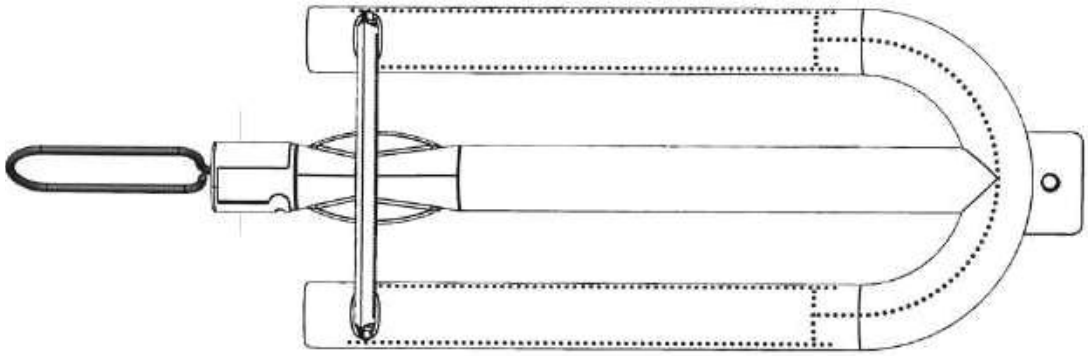

REPLACING LED BULBS

NOTE: DISCONNECT THE GRILL AT THE POWER SOURCE BEFORE REPLACING BULBS.

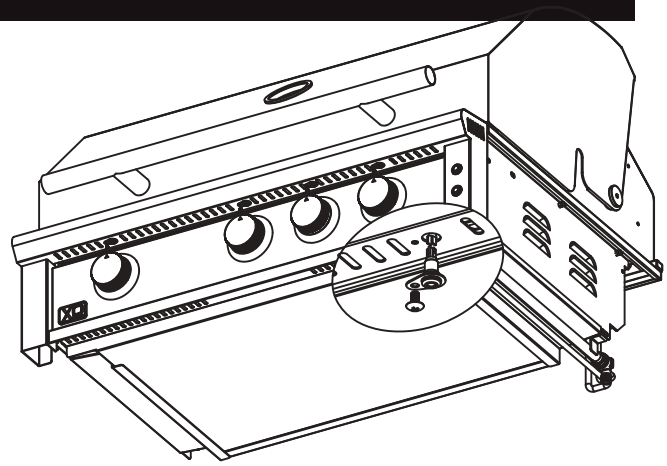

STEP 1.
Using a Phillips head screwdriver, remove the screws holding the LED Bulb fixture in place.

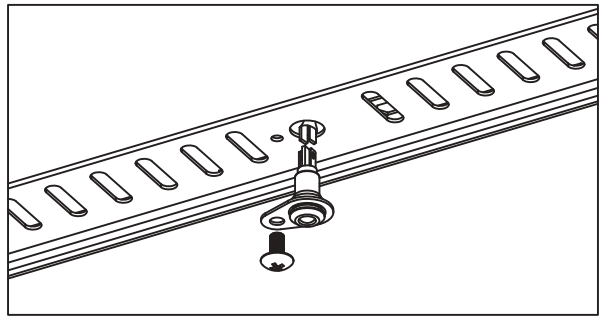

STEP 2.
Pull down to remove the LED Bulb fixture and disconnect the wire plug.

STEP 3.
Remove the bracket by unscrewing the lock nut on the bulb Remove the lock nut from the new bulb and use it to install the bracket.

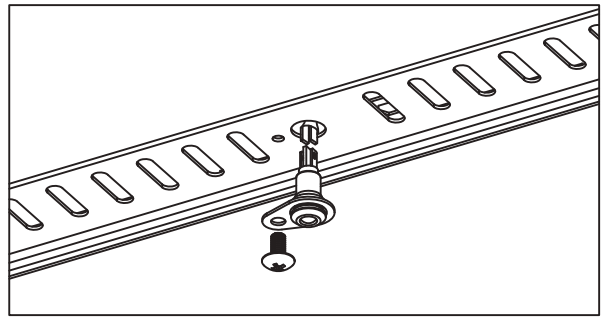

STEP 4.
Connect the new bulb fixture to the wiring harness, feed it back into the opening and replace the screw removed in Step 1 to hold it in place.

REPLACING HALOGEN BULBS

DANGER: HALOGEN BULBS GET EXTREMELY HOT DURING USE.
MAKE CERTAIN THEY ARE COMPLETELY COOL BEFORE ATTEMPTING A CHANGE OUT.

Oil from your skin will reduce bulb life. Avoid touching the bulb with your bare hands. Hold the new bulb with a clean lint free cloth. Wipe the bulb clean after handling.

NOTE: DISCONNECT THE GRILL AT THE POWER SOURCE BEFORE REPLACING BULBS.

STEP 1.
Unplug the grill from the power supply. Using a #2 Phillips screwdriver. Remove the screw holding the light housing.

STEP 2.
Carefully remove the housing from grill. DO NOT PULL HARD - It is attached by electrical wires. Remove the clip holding the light cover to the housing.

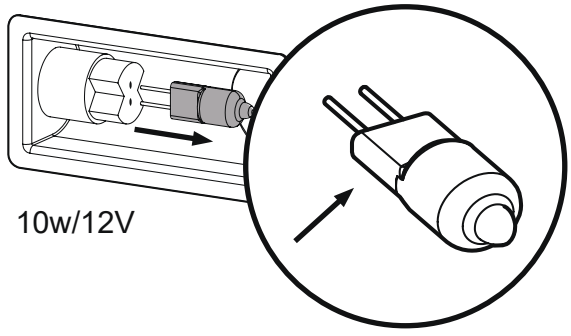

STEP 3.

With the light cover removed pull the halogen bulb out sideways from light socket. CAREFUL - the bulbs are fragile and can break, grip with your fingers only by the sides.

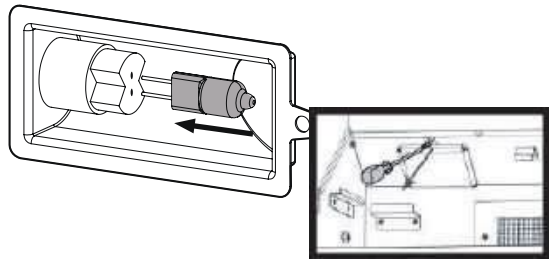

STEP 4.
Do not touch the new bulb with your bare skin. Holding it wrapped in cloth, replace bulb by pushing it straight into light socket. Re-attach light cover, and reinstall the housing by repeating steps 2. and 3. in reverse order.

REMEMBER - AVOID TOUCHING THE NEW BULB WITH BARE SKIN

TROUBLESHOOTING

Often minor issues can be be resolved quickly and easily by the homeowner.

This section is not intended as a replacement for qualified, professional service but rather as a general guide to determine if a service technician is needed. If you are unsure of any issue or have a question regarding your gas gril, do not hesitate to contact our service team. They are here to help you.

XO Service can be reached at 973-403-8900 or by emailing service@easternmarketing.com

BEFORE CALLING SERVICE - SOME COMMON QUESTIONS & FIXES:

1. Is there fuel supplied to the grill?
2. Is the main shut-off valve open?
3. Are you using the correct type of fuel for the grill? (Propane or Natural Gas)
4. Is the grill plugged in to a live, grounded GFCI electric circuit?
5. Are all burners out or just one?
6. Can you light the burner with a match?

ISSUE	POSSIBLE CAUSE (+REMEDY)
Low Heat or Low Flame (with the control knob set on High)	**For built-In** / undersized supply line (Consult code - recommended 3/4” ID pipe minimum) **For freestanding** / kinked or restricted supply hose (Reposition gas supply hose to remove restriction) **Dirty or clogged orifice or venturi** (see section on Cleaning Burners)
Uneven heating	**Flame tamers** / built up debris and residue (Preheat for 10 minutes and see if it burns off) (Perform cleaning on flame tamers) **Drip pan** / requires cleaning (Clean drip pan as per instructions) **Burners fouled or ports plugged** (Clean burners as per instructions)
Yellow flame (accompanied by smell of gas)	I**nsect blockage in burner venturi** (Thorough burner cleaning as per instructions) **Open or improperly set air shuttle** (Call for service)

TROUBLESHOOTING - CONTINUED

ISSUE	POSSIBLE CAUSE (+REMEDY)
Burner not lighting with igniter but will light with match	**Dirty Electrode** (Clean electrode with Isopropol Alcohol & Cloth) **Wet Electrode** (Wipe dry with cloth) **Blocked or damaged valve** (Call for Service)
Humming Regulator Noise	Common internal vibration (No service required)
Burners not cross lighting	**Debris / Grease blocking cross lighting channels** (Clean crosslighting channels) **Burner ports near cross lighting channels blocked** (Clear blocked burner ports with wire)
Infrared burner will not light	**Knob must be held in for30 seconds after ignition** (attempt to relight with long match holding knob in)
Infrared burner Issues (Flashes back | makes “Whoosh” noise | Surface grows dim)	**Ceramic ports are clogged with debris** (Turn off for 2 min - restart and run on high 5 min or until glowing red evenly) **Cracked ceramic** (Call for service)
Control panel lights off	**No power** (Check transformer plugged in & GFCI has not tripped) **Faulty transformer** (Check for 12v outp**ut - replace transformer)** **Faulty push button switch** (Test switch - change as necessary)
Burner goes out	**Grill location** - Wind Issue (Relocate grill or install wind break) **Burner misaligned** (Check to ensure burner is properly seated / Call for service)
Burner goes out on low setting	S**upply hose is pinched or kinked** (Reposition supply hose) **Dirty or clogged orifice or venturi** (see section on Cleaning Burners)

XOGRILL32XLT2 PARTS LIST

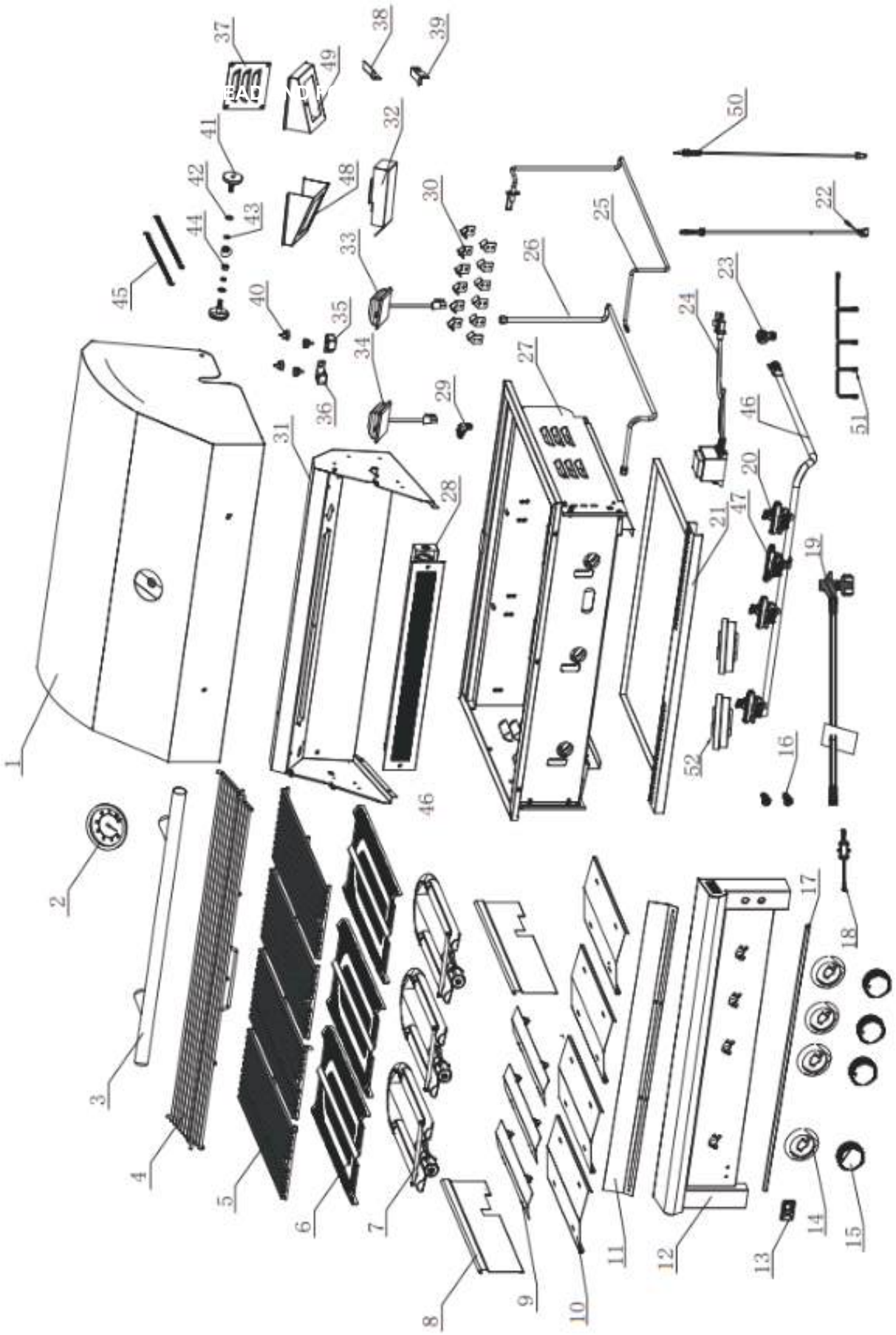

XOGRILL32XLT2 PARTS LIST

Item #	Description	Part #	Quantity
1	Hood (32XLT)	XOPG365	1
2	Thermometer	XOPG302	1
3	Handle (32XLT)	XOPG303	1
4	Warming Rack (32XLT)	XOPG366	1
5	Grate	XOPG307	4
6	Flame Tamer (32XLT)	XOPG308	3
7	Main Burner	XOPG310	3
8	Heat Zone Separator	XOPG311	2
9	Upper Drip Pan Baffle	XOPG312	3
10	Lower Drip Pan Baffle	XOPG313	4
11	LED Heat Shield (32XLT)	XOPG367	1
12	Control Panel (32XLT)	XOPG368	1
13	Logo	XOPG317	1
14	Bezel	XOPG369	4
15	Knob	XOPG319	4
16	Light Switch	XOPG320	2
17	LED Light	XOPG370	1
18	BALLAST RESISTOR	XOPG371	1
19	Regulator w/Hose	XOPG128	1
19	Regulator	XOPG127	1
20	Main Valve	XOPG326	3
21	Drip Tray (32XLT)	XOPG328	1
22	Wire Harness	XOPG330	1
23	LP Elbow	XOPG126	1
23	NG Elbow (1/2" x 1/2")	XOPG129	1
24	Transformer	XOPG333	1
25	Ignition Needle	XOPG334	1
26	Flex Line	XOPG335	1
27	Firebox (32XLT)	XOPG336	1
28	Rear Burner (32XLT)	XOPG338	1
29	Rear Burner Orifice LP (1.1)	XOPG340	1
29	Rear Burner Orifice NG (1.5)	XOPG341	1
30	Flame Tamer Support	XOPG342	12
31	Fire Box Back Wall (32XLT)	XOPG372	1
32	Ignition Cover	XOPG373	1
33	Right Hood Lamp	XOPG346	1
34	Left Hood Lamp	XOPG345	1
35	Hood Support Right	XOPG347	1
36	Hood Support Left	XOPG348	1
37	Louver Cover	XOPG349	1
38	Rack Left Support (XLT2)	XOPG374	1
39	Rack Right Support (XLT2)	XOPG375	1
40	Rubber Bumper	XOPG352	4
41	Hood Spin Axis	XOPG353	2
42	M6 Flat Washer	XOPG354	2
43	M6 Spring Washer	XOPG355	2
44	M6 Lock Nut	XOPG356	2
45	Spring	XOPG357	2
46	Manifold (32XLT)	XOPG363	1
47	Rear Valve	XOPG376	1
48	Left Lamp Cover (XLT2)	XOPG377	1
49	Right Lamp Cover (XLT2)	XOPG378	1
50	Thermocouple (XLT2)	XOPG379	1
51	Bezel Wiring (32XLT2)	XOPG380	1
52	Crossfire (XLT2)	XOPG381	2
53	Main Orifice LP (1.18)	XOPG358	3
54	Main Orifice NG (1.98)	XOPG359	3

XOGRILL40XLT2 PARTS LIST

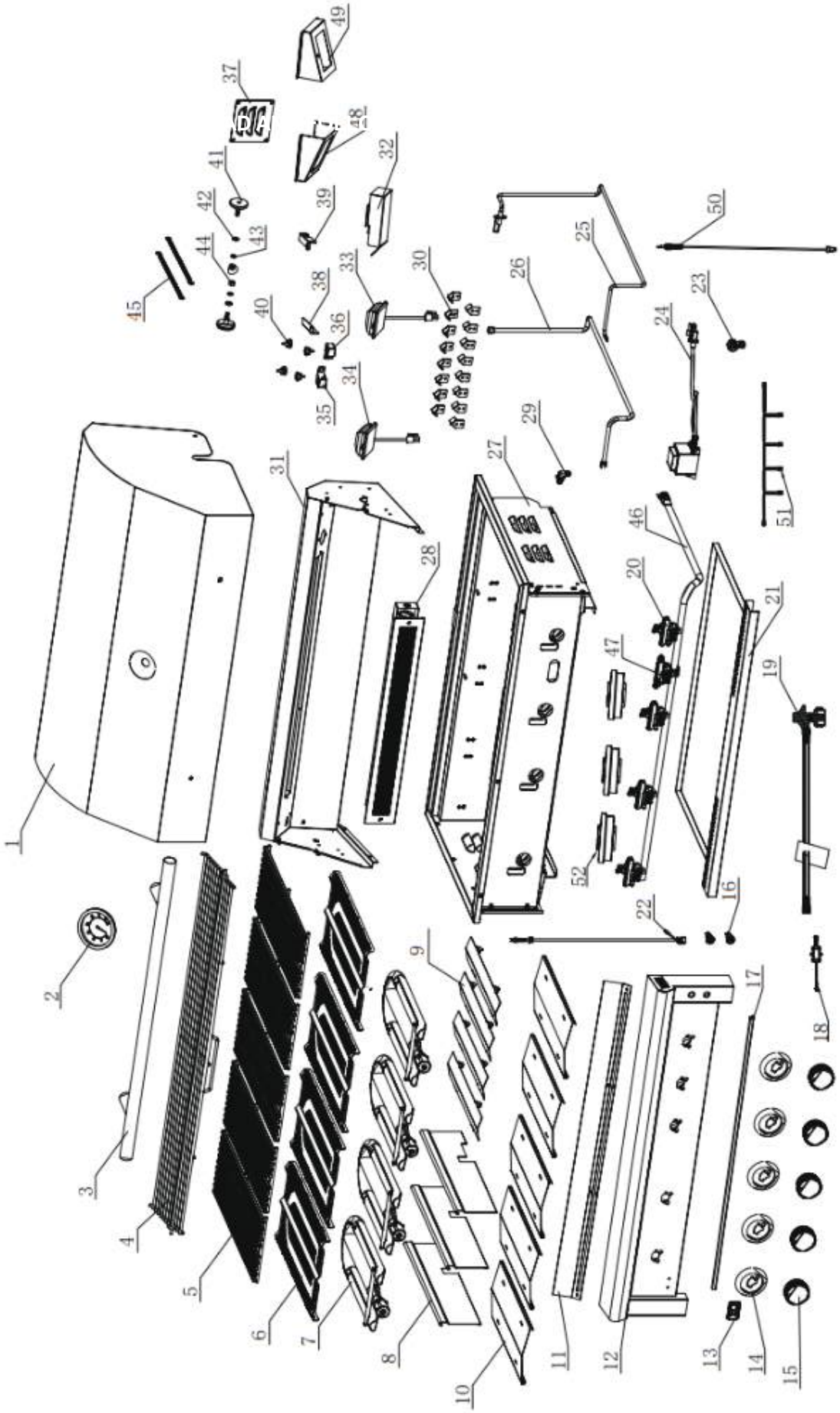

XOGRILL40XLT2 PARTS LIST

Item #	Description	Part #	Quantity
1	Hood (40XLT2)	XOPG382	1
2	Thermometer	XOPG302	1
3	Handle (40XLT)	XOPG304	1
4	Warming Rack (40XLT2)	XOPG383	1
5	Grate	XOPG307	5
6	Flame Tamer (40XLT)	XOPG309	4
7	Main Burner	XOPG310	4
8	Heat Zone Separator	XOPG311	3
9	Upper Drip Pan Baffle	XOPG312	4
10	Lower Drip Pan Baffle	XOPG313	5
11	LED Heat Shield (40XLT2)	XOPG384	1
12	Control Panel (40XLT2)	XOPG385	1
13	Logo	XOPG317	1
14	Bezel	XOPG369	5
15	Knob	XOPG319	5
16	Light Switch	XOPG320	2
17	LED Light (40XLT)	XOPG386	1
18	BALLAST RESISTOR	XOPG371	1
19	Regulator w/Hose	XOPG128	1
19	Regulator	XOPG127	1
20	Main Valve	XOPG326	4
21	Drip Tray (40XLT)	XOPG329	1
22	Wire Harness	XOPG330	1
23	LP Elbow	XOPG126	1
23	NG Elbow (1/2" x 1/2")	XOPG129	1
24	Transformer	XOPG333	1
25	Ignition Needle	XOPG334	1
26	Flex Line	XOPG335	1
27	Firebox (40XLT)	XOPG337	1
28	Rear Burner (40XLT)	XOPG339	1
29	Rear Burner Orifice LP (1.1)	XOPG340	1
29	Rear Burner Orifice NG (1.5)	XOPG341	1
30	Flame Tamer Support	XOPG342	16
31	Fire Box Back Wall (40XLT2)	XOPG387	1
32	Ignition Cover	XOPG373	1
33	Right Hood Lamp	XOPG346	1
34	Left Hood Lamp	XOPG345	1
35	Hood Support Right	XOPG347	1
36	Hood Support Left	XOPG348	1
37	Louver Cover	XOPG349	1
38	Warming Rack Support Left	XOPG374	1
39	Warming Rack Support Right	XOPG375	1
40	Rubber Bumper	XOPG352	4
41	Hood Spin Axis	XOPG353	2
42	M6 Flat Washer	XOPG354	2
43	M6 Spring Washer	XOPG355	2
44	M6 Lock Nut	XOPG356	2
45	Spring	XOPG357	2
46	Manifold (40XLT)	XOPG364	1
47	Rear Valve (XLT2)	XOPG376	1
48	Left Lamp Cover (XLT2)	XOPG377	1
49	Right Lamp Cover (XLT2)	XOPG378	1
50	Thermocouple (XLT2)	XOPG379	1
51	Bezel Wiring (40XLT2)	XOPG388	1
52	Crossfire (XLT2)	XOPG381	3
53	Main Orifice LP (1.18)	XOPG358	4
54	Main Orifice NG (1.89)	XOPG359	4

ORDERING PARTS

Parts Not Under Warranty can be ordered through XO directly.

Parts Under Warranty require a proof of purchase and can be ordered by contacting XO Appliance.
Proof of purchase is required for all warranty parts.

All parts listed in the Parts List have a Part Number.
When ordering parts, first obtain the Model and Serial Numbers from the name plate on your equipment. Then determine the Part Number and the Description of each part from the following illustration and parts list.

For your convenience, record that information here. When ordering be sure to give all this information.

Appliance Model Number	
Appliance Serial Number	
Part Number(s)	

Type of Gas (Check One) Natural Gas (NG) ☐ Propane (LP) ☐

Do not order bolts, screws, washers or nuts.
They are standard hardware items and can be purchased at any local hardware store.

Shipments contingent upon strikes, fires and all causes beyond our control.
Your XO Perfor,ance XLT Gas Grill is identified by model number, serial number, and gas type.
This information is provided on a product identification label located on the left side of the grill and under the grill's drip tray.

convenience, complete this section for future reference when contacting XO Appliance.

CALL 973-403-8900
or email
service@easternmarketing.com

XO Limited Warranties

Warranty Terms for XO - Residential Use Only
XO Stainless Steel Gas Grills and Burners

XO warranties their gas grills to be free from defects at time of purchase and for the periods specified below. The grill must be installed by a qualified technician and must be maintained and operated safely, in accordance with the instruction manual. This warranty applies to the original purchaser only and is non-transferable. All warranty repairs must be accomplished by a qualified gas appliance technician.

Limited Lifetime Parts Warranty

XO warrants the stainless steel main burners and fabricated stainless steel housing to be free from defects in material and workmanship under normal residential use for the lifetime of this product. This warranty excludes discoloration, surface scratches, weather and atmospheric related staining, and minor surface rust and oxidation which are normal and may be expected with any outdoor product. The actual part will be repaired or replaced, free of charge, with the owner paying for all other costs including installation, labor, shipping and handling.

Five Year Limited Parts Warranty

XO warrants the briquette trays, stainless steel grates, drip pans and gas valves to be free from defects in material and workmanship under normal residential us for a period of 5 years from the original date of purchase. The actual part will be repaired or replaced, free of charge, with the owner paying for all other costs including installation, labor, shipping and handling.

Two Year Limited Parts Warranty

XO warrants all other grill components to be free from defects in material and workmanship under normal residential use for a period of 2 years from the original date of purchase. The actual part will be repaired or replaced, free of charge, with the owner paying for all other costs including installation, labor, shipping and handling.

One Year Limited Parts & Labor Warranty

For a period of 1 year from the original date of purchase, XO will replace or repair parts found to be defective at no cost to the original purchaser. This includes the cost of shipping replacement parts and where necessary, service labor at prevailing local rates by an XO authorized service person. Service will be provided during normal business hours and must be authorized in advance by XO

Common Area Warranty

A 180 Day Warranty applies to applications where the use of the product extends beyond normal residential use such as bed and breakfast inns, private clubs, multidwelling condos and apartments. The actual part will be repaired or replaced, free of charge, with the owner paying for all other costs including labor, installation, shipping and handling. This warranty excludes all commercial locations such as restaurants and food service locations.

Warranty Limitations and Exclusions

This warranty shall apply only to products purchased and located within the continental United States and Canada. Warranty coverage begins on the original date of purchase and proof of date of purchase is required. In order to activate the warranty, we require you to register your purchase online at www.xoappliance.com within 90 days of purchase. This warranty applies only to the original owner and may not be transferred. This warranty does not apply to damages resulting from negligence, alteration, misuse, abuse, accident, natural disaster, loss of electrical power to the product for any reason, improper installation or improper operation, unauthorized adjustments or calibrations, dings, dents, scratches, or damages due to harsh cleaning chemicals. This warranty does not apply to commercial use or to products with altered or removed serial numbers. This warranty shall not be liable for incidental, consequential, special or contingent damages resulting from its breach of this written warranty or any implied warranty.

FOR WARRANTY SERVICE & REPLACEMENT PARTS: check the contact & support section of our website xoappliance.com, email us at service@xoappliance.com or call

1-973-403-8900

120 Eagle Rock Ave, Suite 303 | East Hanover, NJ 07936

XO APPLIANCE

www.xoappliance.com