KINGSTON FAUCETURE

Steel Bathroom Console Sink Base

Installation Instructions

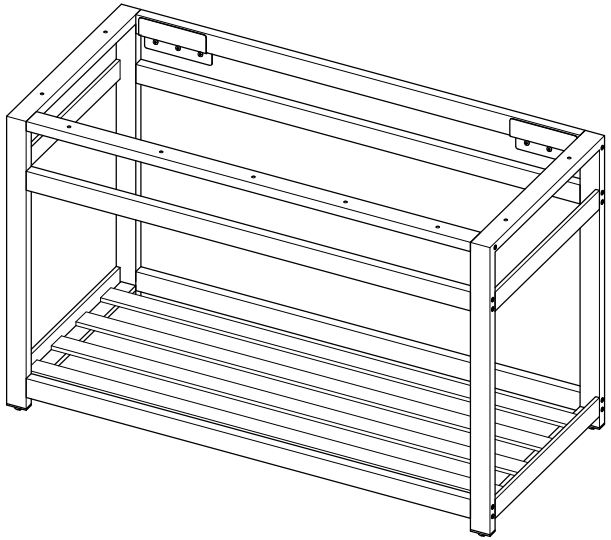

Parts:

☐Shape		Straight Tube			
A	B	C	D	E	F
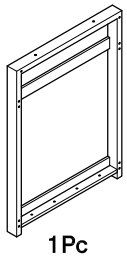	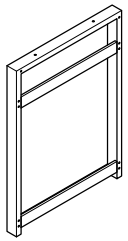	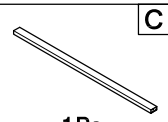	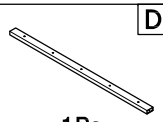	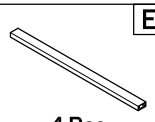	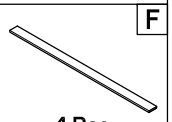
1 Pc	1 Pc	1 Pc	1 Pc	4 Pcs	4 Pcs
		Screw		Bolt	Mounting Bracket
		Ø23.5mm G	1/4" x 19mm H	1/4" x 75mm I	J
					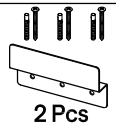
		4 Pcs	8 Pcs	20 Pcs	2 Pcs

www.kingstonbrass.com

TOLL-FREE CUSTOMER SERVICE: 1-877-2-KBRASS
TECHNICAL SUPPORT E-mail: service@kingstonbrass.com
12775 Reservoir Street, Chino, CA 91710

⚠CAUTION

Failure to follow all installation directions may cause product to detach from the wall and cause serious injury



⚠WARNING

Lifting hazard.

Single person lift could cause injury.
Use assistance when moving or lifting.

Tools Required

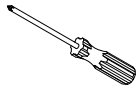
Phillips Screwdriver


Allen Wrench


Pencil

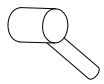
Hammer

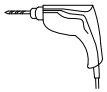
Power Drill

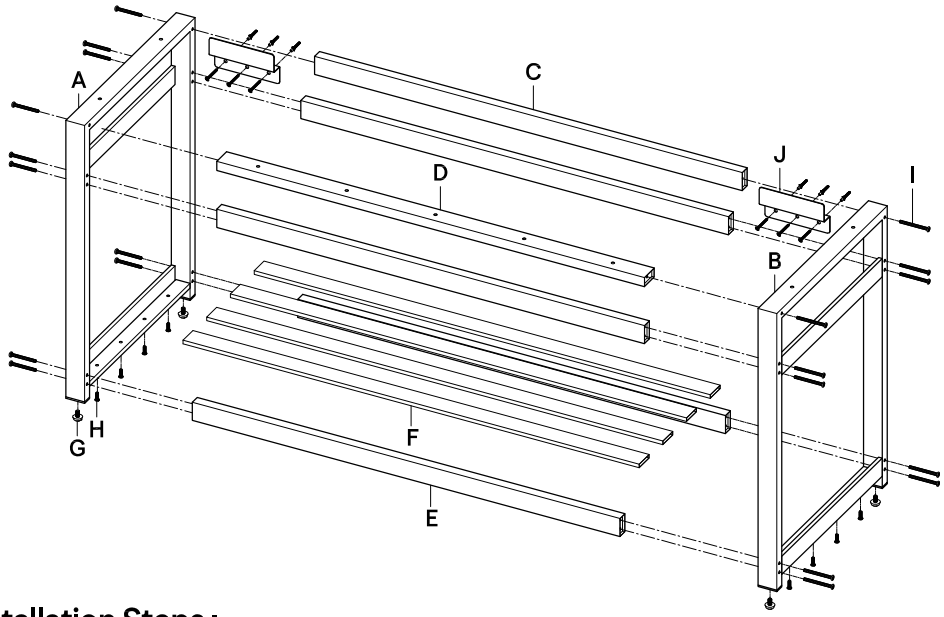

Installation Steps :

Step 1. Thread adjustable leg screws "G" to the bottom of parts A & B.
Step 2. Locate part C and join parts A & B by attaching part "C" to the top rear of the support assembly using the attached Allen bolts " I ".
Step 3. Locate part "D" and attach to the top front of the assembly, holes should be on the top surface of the support beam.
Step 4. Vertically attach support beams "E" to the front and rear of the support structure.
Step 5. Place Bottom rack slats "F" on the bottom support beams on Parts "A" & "B" and secure using enclosed Phillips screws "H".
Step 6. Level entire structure by adjusting leg screws "G" as necessary.
Step 7. Once unit has been assembled place at the desired location and after leveling draw a line across the bottom of the top vertical beam (C).
Step 8. Remove the Console sink base, find the location of the wood studs and using the marked line as a guide to install support brackets at the location of the studs, make sure at least one of the screws is secured to the wood; you will need an anchor to secure from a secondary point in the bracket.
Step 9. The depth of wall drill hole for installing anchor should be 40mm (1-5/8") Min.
Step 10. Slide Console sink base into place and attach top sink.

Cleaning

Clean with a damp cloth only.
Avoid using metal or abrasive polishes.

©2025 LVC Kingston LLC. All Rights Reserved.
2025-05-D