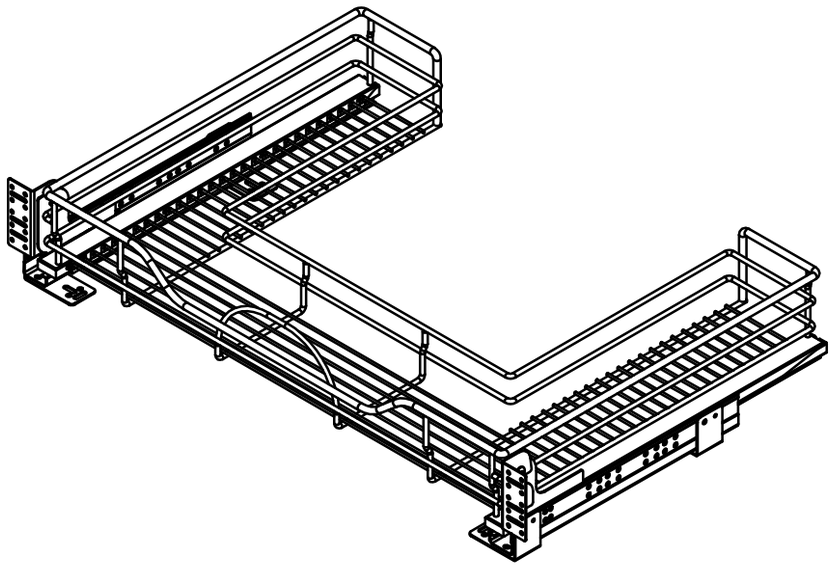

PART DIMENSIONS		
	MIN	MAX
WIDTH	32.52 [826]	32.52 [826]
DEPTH	21.74 [552]	21.74 [552]
HEIGHT	5.59 [142]	5.59 [142]
WEIGHT		
DIAMETER		
RADIUS		
CONTAINTER CAPACITY		
CONTAINER UOM		

MIN CABINET OPENING	
WIDTH	32.52 [826]
DEPTH	22.00 [559]
HEIGHT	6.00 [152]

PRODUCT MAX WEIGHT RATING

SLIDE SPECIFICATIONS				
SLIDE TYPE	QUICK RELEASE	SLIDE EXTENSION	21.26 [540]	MAX WEIGHT RATING
SLIDE CLOSING	SOFT CLOSE	SLIDE LENGTH	21.65 [550]	
SLIDE MOUNTING	FLOOR	SLIDE FINISH	ZINC	75LB

CUSTOMER DRAWING

This drawing is the property of Rev-A-Shelf (RAS) and is disclosed in confidence to the extent its subject matter is original to RAS. Any vendor receiving this drawing from RAS shall hold and use this drawing for the sole benefit of RAS and shall not disclose it to, or use or reproduce it for any third party, or perform any act adverse to the interest of RAS with respect to this drawing without the express written permission of RAS. Vendors shall not revise any physical, dimensional or performance characteristic unless authorized by Rev-A-Shelf Engineering.

REV.	DATE	BY	DESCRIPTION OF CHANGE

INCH [MM] — AMERICAN PROJECTION

	BY	DATE
DRAWN	XIAN	13–12–30

REV-A-SHELF, INC.

SIZE B — 33" PULL OUT WIRE U SHAPED BASKET SOFT CLOSE

TOLERANCES
MAT. DEC. ANGLES
(WOOD) .XX ±.03 [.8mm] ±1/2°
(OTHER) .XX ±.02 [.5mm]
(ALL) .XXX ±.005 [.13 mm]
FRACTIONS ±1/32 [.8 mm]

MATERIAL

FINISH

DRAWING NO.

PART NO. 5786-33 CR

SCALE 0.163

SHEET 4 OF 4