PROSEO

GE PROSEO Flex Keypads, Dimmers, and Switches Installation Guide

Document Number:	009-2695-01
Document Date:	August 2026

This document guides the reader through process of installing GE PROSEO Flex dimmers, keypads, and switches, including the following steps:

- Identifying circuit type
- Removing existing switch(es)
- Single pole and 3-way installations where line and load are in different outlet boxes
- Single pole and 3-way installations where line and load are in the same outlet box

GE is a trademark of General Electric Company. Used under trademark license. Amazon, Alexa, and all related logos are trademarks of Amazon.com, Inc. or its affiliates. Google and other related marks and logos are trademarks of Google LLC.

Copyright © 2026 Savant Systems, Inc

45 Perseverance Way, Hyannis, MA 02601
savant.com | 508.683.2500

Table of Contents

Before you Begin 3

1. Turn Off the Power 4
2. Identify Circuit Type and Remove Old Switch(es) 4
3. Single Pole Installation 5
   - 3.1. Label Wires 5
   - 3.2. Single Pole Wiring 6
4. 3-Way Installation 7
   - 4.1. Line and Load in Different Outlet Boxes 7
   - 4.1. Line and Load in the Same Outlet Box 9
5. Finishing Single Pole and 3-Way Installations 11
6. System Booting LED Sequences 12
7. Hardware Overview 13
8. Additional Information and Warnings 14

Before You Begin

WARNING: RISK OF ELECTRIC SHOCK
This product installation requires handling 120V wiring. Follow each step carefully. If any concerns handling wiring, hire a qualified electrician. Ensure all work meets applicable local and national codes.

Compatibility Requirements

- Rated 120V AC 60Hz
- Neutral wire is required (wire is usually white or grey)
- Ground wire is required (wire is usually green, green with a yellow stripe, or copper)
- Wi-Fi 802.11 b/g/n @ 2.4GHz required
- Compatible with halogen, incandescent, and LED bulbs (including GE Smart Bulbs). For a list of compatible dimmable bulbs, visit gelighting.com/compatibility.
- On/Off Switch
  - Maximum LED Rating: 1.25A
  - Maximum Halogen/Incandescent Rating: 5A
  - Maximum Motor: 1/4HP
- Dimmer Switch
  - Maximum LED Rating: 150W/1.25A
  - Maximum Halogen/Incandescent Rating: 450W
  - Forward-phase Dimming

Included Hardware

- GE PROSEO Flex Dimmer(s), Keypad(s), and/or Switch(es) and wall plate
- Wire nuts (x8)
- Philips mounting screws (x4)
- Jumper wire cable
- Wire labels

Required Tools (Not Included)

Philips screwdriver ☐

Needle nose pliers ☐

Voltage tester ☐

GE PROSEO Tabletop / In-Wall Hub OR Savant Host or Director ☐

1. Turn Off the Power

1. Turn off the power for the switch location at the circuit breaker.
2. Test the existing switch by toggling the switch on and off, ensuring they do not turn on.

2. Identify Circuit Type and Remove Old Switch(es)

There are generally two (2) circuit types when installing light switches. Single Pole (single location) where one (1) switch controls all of the lights in a circuit, or 3-Way (two location) where two (2) switches control all of the lights in a circuit.

1. Identify the circuit type using the diagrams below. Then continue onto the appropriate steps.

Single Location

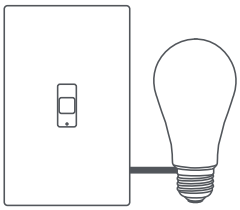

For Single Location circuit types, proceed to section 3 for installation steps.

Two Location

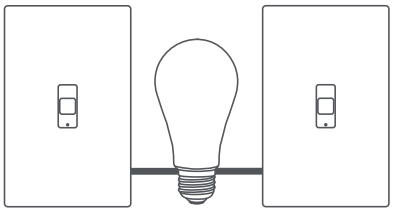

For Two Location circuit types, proceed to step 2 below.

2. Identify wiring set up. With a two location circuit, there are generally two (2) ways the wiring can be set up; line and load in different outlet boxes, or line and load in the same outlet box. With the circuit box open, review the diagrams below and identify the existing wiring set up.

Line and Load in Different Outlet Boxes

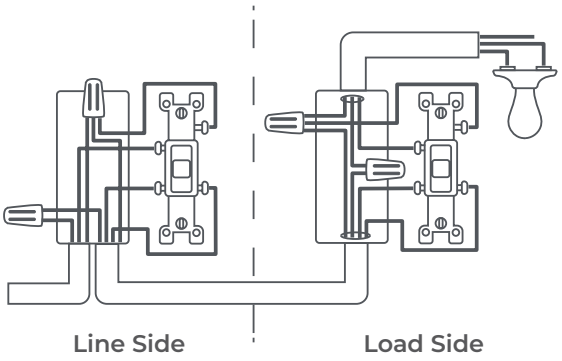

There are 2 sets of wire in each box. The power wire comes into one side of the box, wires run out of the other side of the box to fixture load.
Proceed to section 4.1 to complete installation.

Line and Load are in the Same Outlet Box

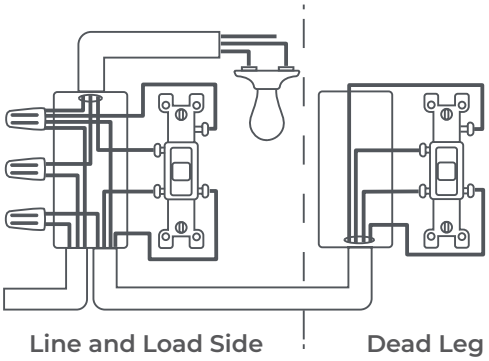

There are 3 sets of wire in one box, and 1 set of wire in the other box. The switch with 1 set of wire is the “Dead Leg”. For GE PROSEO application, a button switch needs to be wired at the Dead leg side with an aux switch.
Proceed to section 4.2 to complete installation.

3. Single Pole Installation

3.1. Label Wires

1. Label the existing line wire (black) with the black label sticker **LINE**.

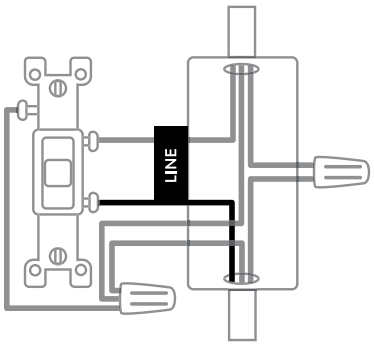

2. Label the existing neutral wire (white) with the white label sticker **NEUTRAL**.

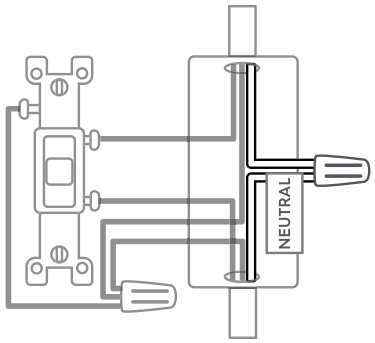

3. Label the remaining black wire with red label **LOAD**.

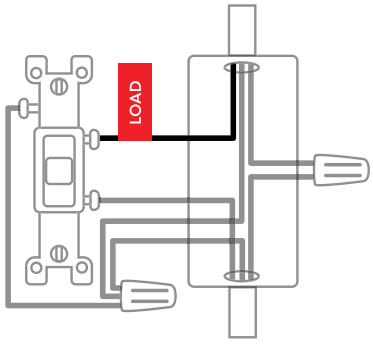

4. Label the copper/green wire with green label **GROUND**.

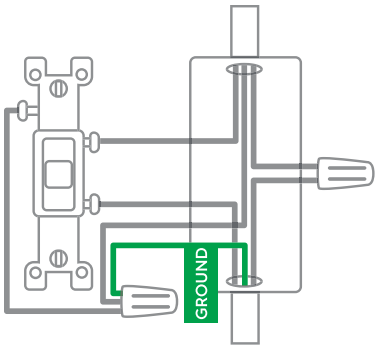

5. When finished, the labeled wires should look similar to the diagram below.

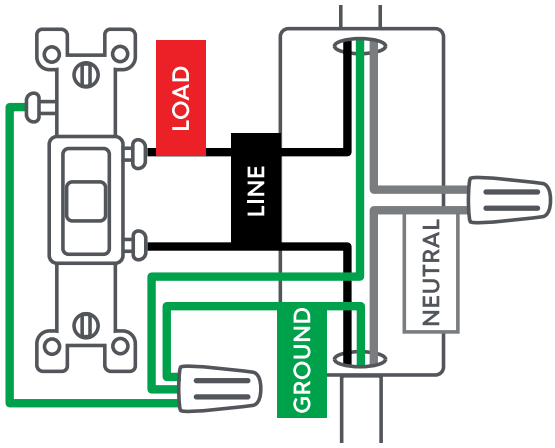

3.2. Single Pole Wiring

1. Disconnect wires and remove the existing switch.

2. Connect the black wire on the switch to the **LINE** (black label) wire from the wall using a yellow wire nut.

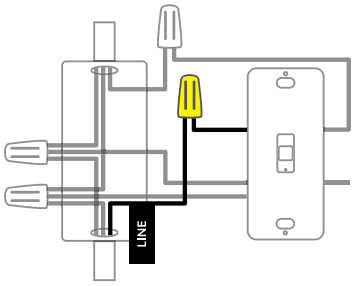

3. Connect the white wire on the switch to the **NEUTRAL** (white label) wires from the wall using a yellow wire nut.

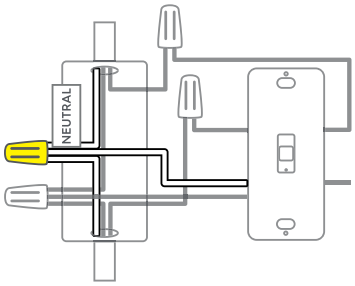

4. Connect the red wire on the switch to the **LOAD** (red label) wire from the wall using a yellow wire nut.

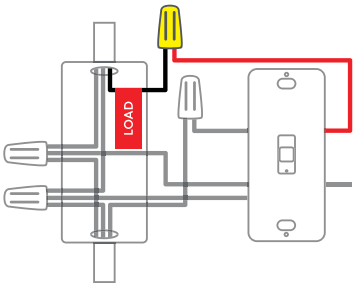

5. Connect the green wire on the switch to the **GROUND** (green label) wire from the wall using a yellow wire nut.

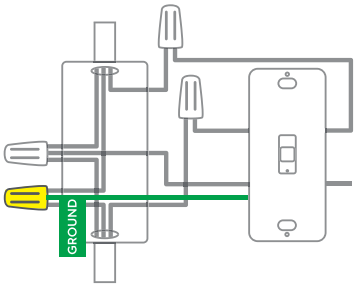

6. Cap the yellow wire on the switch using a blue wire nut.

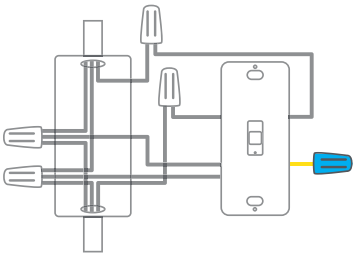

7. When finished, the wires should look similar to the diagram below.

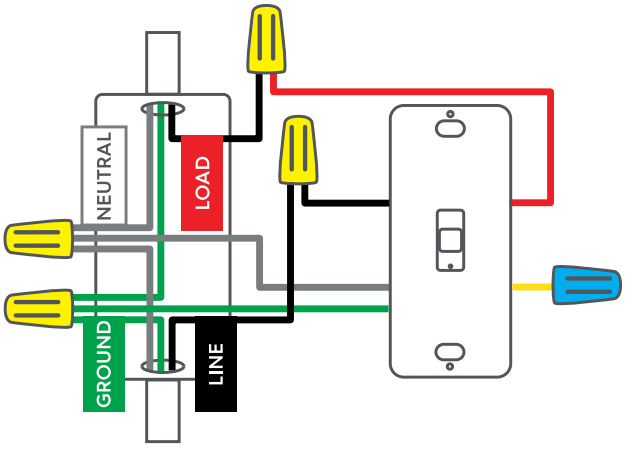

4. 3-Way Installation

The configurations below depict common 3-way configurations. These include primary and auxiliary (aux) switches.

IMPORTANT NOTES:

- Flex Fan Speed Control Switches are not currently supported in 3-way installations.
- For systems running **SavantOS 11.2.4 or higher**, 3-way configurations are supported using either a standard mechanical switch or GE PROSEO Button Switch.
- For systems running **SavantOS 11.2.1 or lower**, only a GE PROSEO Button Switch can be used in 3-way configurations, reconfigured to an aux switch using a button press procedure.

4.1. Line and Load in Different Outlet Boxes

Label Existing Wires

1. Determine the line side and the load side. The line side has wires connected to the power source. The load side wires to the fixture load.

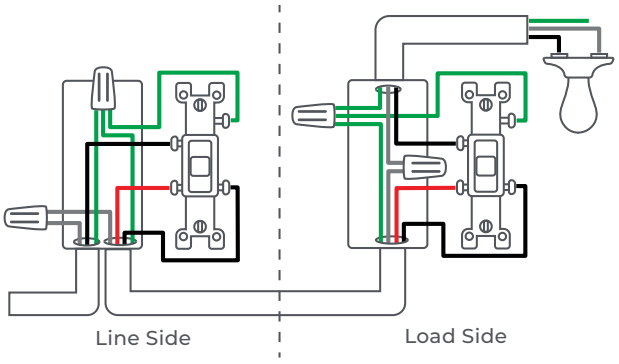

2. Label wires on the line side.
   - Label the Line wire (black) with the black label **LINE**.
   - Label the Neutral wire (white) with the white label **NEUTRAL**.
   - Label the black traveler wire with the black label **TRAVELER1**.
   - Label the second traveler wire with the red label **TRAVELER2**.

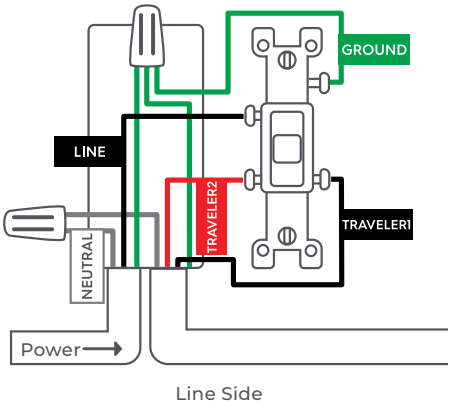

3. Label wires on the load side.
   - Label the wire running to the fixture load (black) with the red label **LOAD**.
   - Label the Neutral wire (white) with the white label **NEUTRAL**.
   - Label the black traveler wire with the black label **TRAVELER1**.
   - Label the second traveler wire with the red label **TRAVELER2**.
   - Label the copper/green wire with the green label **GROUND**.

   NOTE: Neutral and ground wires are required. If you don't have either wire, the GE PROSEO switch is not compatible.

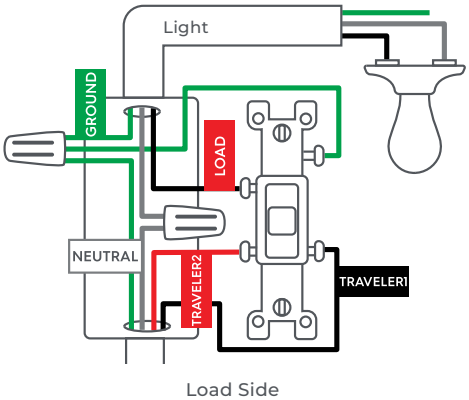

Wiring

1. Wire the aux GE PROSEO Switch at line side.
   - Disconnect wires and remove the existing switch.
   - Combine the black wire on the switch, the **LINE** (black label) wire and the **TRAVELER1** (black label) using a yellow wire nut.
   - Connect the white wire on the switch to the **NEUTRAL** (white label) wire from the wall using a yellow wire nut.
   - Connect the yellow wire on the switch to the **TRAVELER2** (red label) wire from the wall using a yellow wire nut.
   - Connect the green wire on the switch to the **GROUND** (green label) wire from the wall using a yellow wire nut.
   - Cap red wire on the switch using a blue wire nut.

2. Wire the primary GE PROSEO switch at load side.
   - Disconnect wires and remove the existing switch.
   - Connect the black wire on the switch to the **TRAVELER1** (black label) wire from the wall using a yellow wire nut.
   - Connect the white wire on the switch to the **NEUTRAL** (white label) wire from the wall using a yellow wire nut.
   - Connect red wire on the switch to the **LOAD** (red label) wire from the wall using a yellow wire nut.
   - Connect the yellow wire on the switch to the **TRAVELER2** (red label) wire from the wall using a yellow wire nut.
   - Connect the green wire on the switch to the **GROUND** (green label) wire from the wall using a yellow wire nut.

3. Go to section 5 to complete installation.

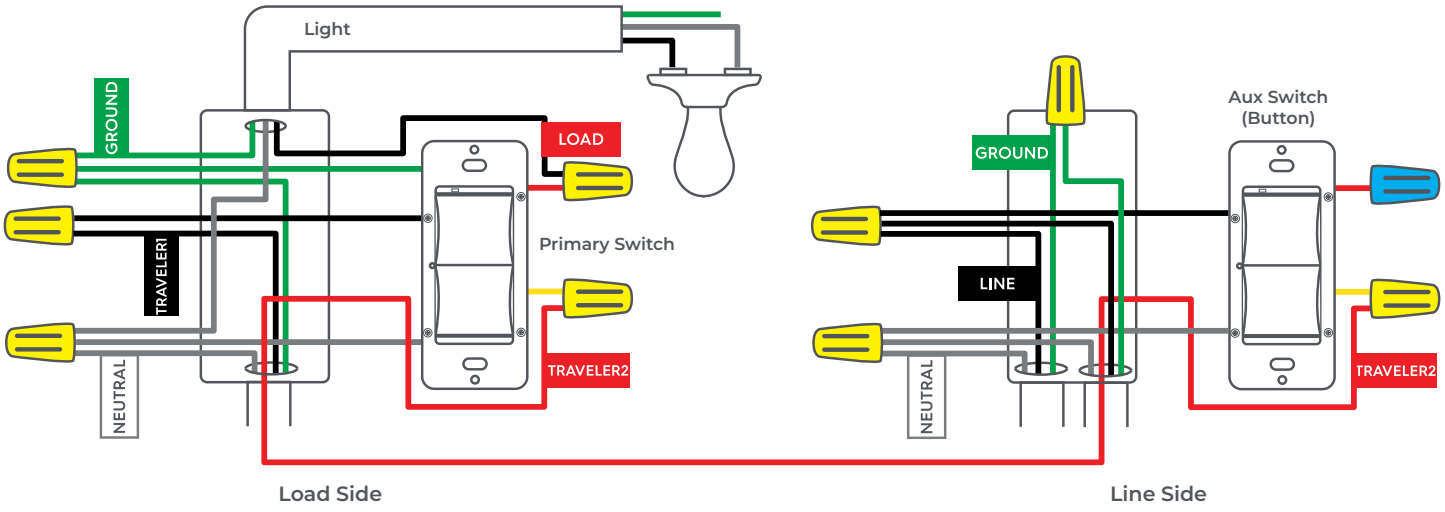

To configure a Button Switch into an aux switch: Press and hold the UP button while pressing and holding the Reset Pinhole Button. First release the Reset Pinhole Button, then release the UP button.

4.2. Line and Load in the Same Outlet Box

Label Existing Wires

1. Determine the line and load side, and the dead leg. The line and load side has wires connected to the power source and fixture load.

2. Label wires on the line and load side.
   - Label the line wire (black) with the black label **LINE**.
   - Label the neutral wire (white) with the white label **NEUTRAL**.
   - Label the wire running to the fixture load (black) with the red label **LOAD**.
   - Label the white traveler wire with the black label **TRAVELER1**.
   - Label the second traveler wire with the red label **TRAVELER2**.

3. Label wires on the dead leg side.
   - Label the line wire (black) with the black label **LINE**.
   - Label the neutral wire (white) with the white label **NEUTRAL**.
   - Label the copper/green wire with the green label **GROUND**.
   - Label the white traveler wire with the black label **TRAVELER1**.
   - Label the second traveler wire with the red label **TRAVELER2**.

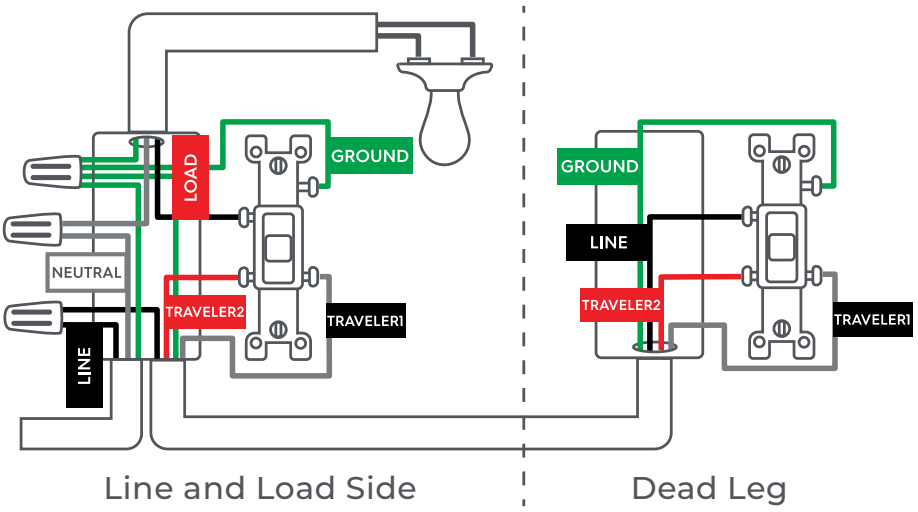

Wiring

1. Wire the primary GE PROSEO Switch on line and load side.
   - Disconnect wires and remove the existing switch.
   - Connect the black wire on the switch to the **LINE** (black label) wire from wall using a yellow wire nut.
   - Combine the white wire on the switch, the **NEUTRAL** (white label) wire and the **TRAVELER1** (black label) from the wall using a red wire nut.
   - Connect red wire on the switch to the **LOAD** (red label) wire from the wall using a yellow wire nut.
   - Connect the yellow wire on the switch to the **TRAVELER2** (red label) wire from the wall using a yellow wire nut.
   - Connect the green wire on the switch to the **GROUND** (green label) wire from the wall using a red wire nut.

2. Wire aux GE PROSEO switch on the dead-end side.
   - Disconnect wires and remove the existing switch.
   - Connect the black wire on the switch to the **LINE** (black label) wire from the wall using a yellow wire nut.
   - Connect the white wire on the switch to the **TRAVELER1** (black label) wire from the wall using a yellow wire nut.
   - Connect the yellow wire on the switch to the **TRAVELER2** (red label) wire from the wall using a yellow wire nut.
   - Connect the green wire on the switch to the **GROUND** (green label) wire from the wall using a yellow wire nut.
   - Cap red wire on the switch using a blue wire nut.

3. Go to section 5 to complete installation.

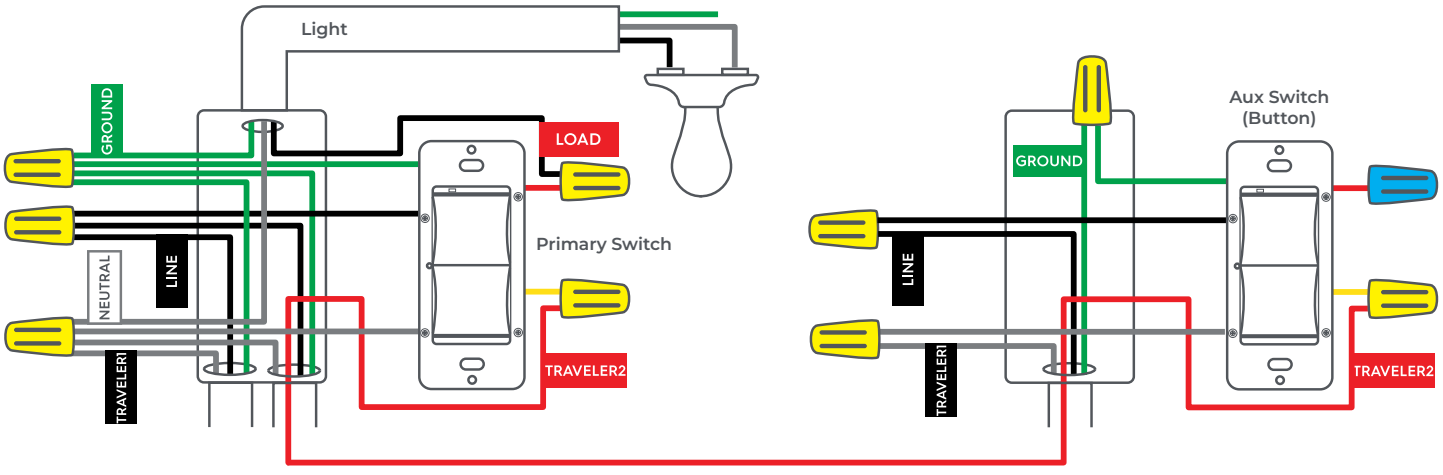

Line & Load Side

Dead Leg

To configure a Button Switch into an aux switch: Press and hold the UP button while pressing and holding the Reset Pinhole Button. First release the Reset Pinhole Button, then release the UP button.

5. Finishing Single Pole and 3-Way Installations

1. Neatly push the wires back into the box, rotating the switch so it is oriented according to the image.
2. Using the long screws provided, secure the switch to the wall unit level and flush.
3. Screw on the wall plate bracket using the short screws, then snap the wall plate cover onto the bracket.
4. After the switch is secured and wall plate mounted, turn the power back on at the circuit breaker box.
   NOTE: To configure a Button Switch into aux switch: Press and hold the UP button while pressing and holding the Pin Hole button. First release the Pinhole button, then release the UP button .
5. **Next**, set up the GE PROSEO Hub or Savant Director/Host and follow the setup instructions to enable smart control.

6. System Booting LED Sequences

System Ready

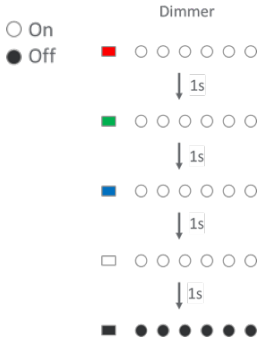

The status indicator light will illuminate sequentially in red, green, blue, and white, with each color remaining lit for 1 second. During this sequence, the LED array remains illuminated. Finally, both the status indicator and the LED array extinguish simultaneously.



The status indicator light will illuminate in sequence: red, green, blue, white, and finally turn off. Each color remains lit for 1 second.

No Local Network / Wi-Fi Connection

This LED sequence indicates the switch is not connected to local Wi-Fi networks and requires provisioning. This sequence will terminate after approximately one minute. Press any button to restart the network search. The subsequent LED sequence will reflect the current device status.

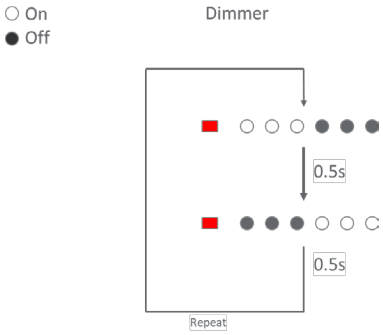

The status indicator light remains solid red. For the LED array, three LEDs alternate white left to right. (0.5 seconds on, 0.5 seconds off)

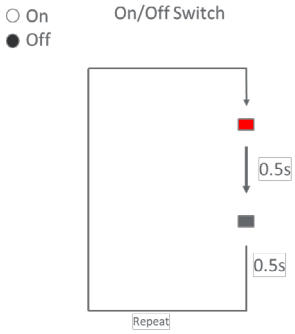

The status indicator blinks red. (0.5 seconds on, 0.5 seconds off)

No Connection to Hub / Host

The switch is connected to local network but not the configuration running on the hub / host.

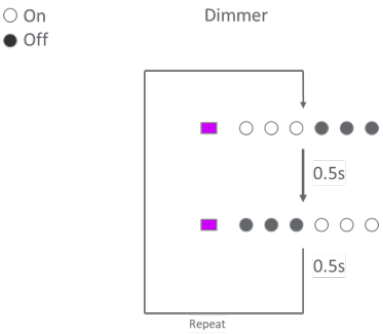

The status indicator light remains solid purple. For the LED array, three LEDs alternate white left to right. (0.5 seconds on, 0.5 seconds off)

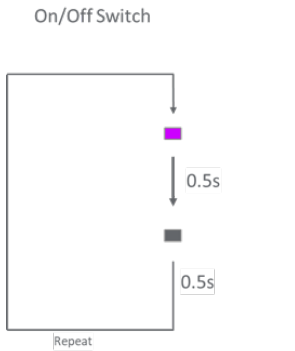

The status indicator blinks purple. (0.5 seconds on, 0.5 seconds off)

7. Hardware Overview

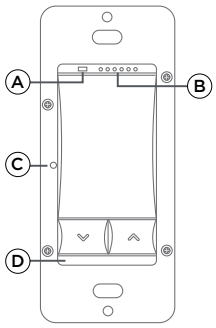

Button Dimmer

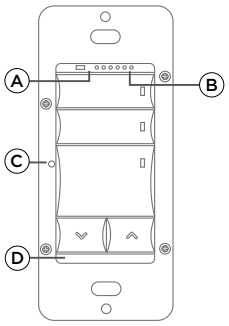

Keypad Dimmer

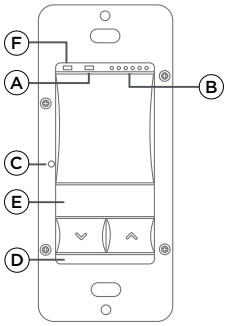

Button Dimmer + Motion

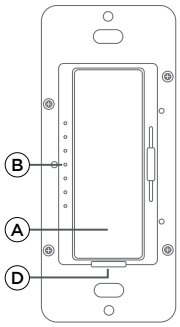

Paddle Dimmer

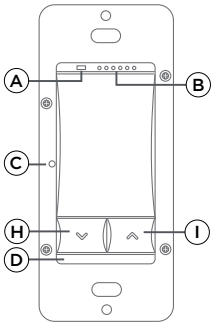

Fan Speed Control

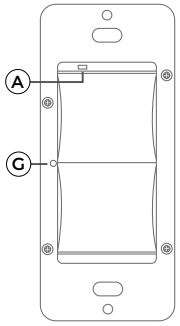

Button Switch

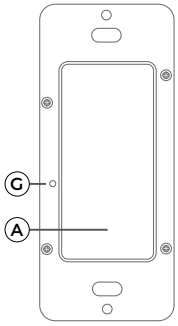

Paddle Switch

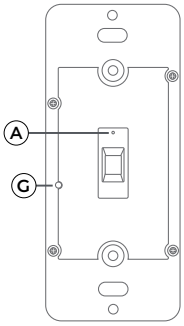

Toggle Switch

A	Status Indicator
B	LED Array These LEDs indicate any of the following: • The amount of power applied to the load wired to the dimmer. The LEDs will be on when the load is on and all off when the load is off. • The status of the dimmer during the setup and provisioning process. See LED sequencing section.
C	Reset Pin-hole Button • Press and release: clear the configuration programmed in the dimmer. • Press and hold: press and hold the Reset Pin-hole Button for 3 seconds then release. The dimmer will be factory reset.
D	Air-Gap Switch. Pull out to disconnect power from the dimmer.
E	Motion Detection Sensor
F	Ambient Light Sensor
G	Restart Pin-hole Button: Press and release to restart the switch.
H	Fan Speed Down Button
I	Fan Speed Up Button

Factory Reset

Product	Factory Reset Procedure
Button Dimmer Motion Button Dimmer Keypad Dimmer	Press and hold the Reset Pin-hole Button for 3 seconds then release.
Paddle Dimmer Button Switch Paddle Switch Toggle Switch Fan Speed Control Switch	Press and hold the Button for 15 seconds then release.

8. Additional Information and Warnings

On/Off Switch

⚠ Caution High Voltage
Only use this product in conjunction with an upstream 15A circuit breaker.

- Disconnect power supply before servicing
- Operation temperature: 0 to 40 ˚C
- For Control of Permanently Installed Incandescent and LED Lamp Fixtures Only.
- Type 1 Enclosure
- IP20
- Pollution Degree 2
- Impulse Voltage: 2500V
- Type 1.B action
- Indoor use only

Dimmer Switch

CAUTION: TO REDUCE THE RISK OF OVERHEATING AND POSSIBLE DAMAGE TO OTHER EQUIPMENT, DO NOT INSTALL TO CONTROL A RECEPTACLE, A MOTOR OPERATED APPLIANCE, A FLUORESCENT LIGHTING FIXTURE, OR A TRANSFORMER-SUPPLIED APPLIANCE

ATTENTION: GRADATEURS COMMANDANT UNE LAMPE A FILAMENT DE TUNGSTENE– AFIN DE REDUIRE LE RISQUE DE SURCHAUFFE ET LA POSSIBILITE D'ENDOMMAGEMENT A D'AUTRES MATERIELS, NE PAS INSTALLER POUR COMMANDER UNE PRISE, UN APPAREIL A MOTEUR, UNE LAMPE FLUORESCENTE OU UN APPAREIL

FOR SUPPLY CONNECTION, USE COPPER WIRE ONLY RATED AT 75°C.

Cu Al

FCC Compliance Statement:

⚠ Warning: Changes or modifications to this unit not expressly approved by the party responsible for compliance could void the user's authority to operate the equipment.

Note: This equipment has been tested and found to comply with the limits for a Class B digital device, pursuant to Part 15 of the FCC Rules. These limits are designed to provide reasonable protection against harmful interference in a residential installation. This equipment generates, uses and can radiate radio frequency energy and, if not installed and used in accordance with the instructions, may cause harmful interference to radio communications.

However, there is no guarantee that interference will not occur in a particular installation. If this equipment does cause harmful interference to radio or television reception, which can be determined by turning the equipment off and on, the user is encouraged to try to correct the interference by one or more of the following measures:

- Reorient or relocate the receiving antenna.
- Increase the separation between the equipment and receiver.
- Connect the equipment into an outlet on a circuit different from that to which the receiver is connected.
- Consult the dealer or an experienced radio/TV technician for help.

The device must not be co-located or operating in conjunction with any other antenna or transmitter. This device complies with Part 15 of the FCC Rules. Operation is subject to the following two conditions:

(1) this device may not cause harmful interference, and (2) this device must accept any interference received, including interference that may cause undesired operation.

FCC RF Radiation Exposure Statement:

To maintain compliance with the FCC's RF exposure guidelines, place the product at least 20cm from nearby persons.

Innovation, Science and Economic Development (ISED) Canada Statement:

This device complies with RSS247 of Innovation, Science and Economic Development (ISED) Canada. Cet appareil se conforme à RSS247 de Innovation, Sciences et Développment économique (ISDE) Canada.

This device complies with Innovation, Science and Economic Development (ISED) Canada license-exempt RSS standard(s). Operation is subject to the following two conditions:

(1) this device may not cause interference, and (2) this device must accept any interference, including interference that may cause undesired operation of the device.

Appareils radio exempts de licence. Son fonctionnement est sujet aux deux conditions suivantes: (1) le dispositif ne doit pas produire de brouillage prejudiciable, et (2) ce dispositif doit accepter tout brouillage recu, y compris un brouillage susceptible de provoquer un fonctionnement indesirable.

This equipment complies with ISED RSS-102 radiation exposure limits set forth for an uncontrolled environment. This transmitter must be installed to provide a separation distance of at least 20cm from all persons and must not be collocated or operating in conjunction with any other antenna or transmitter.

Cet équipement est conforme aux limites d'exposition aux rayonnements d'ISDE RSS-102 définies pour un environnement non contrôlé. Cet émetteur doit être installé pour fournir une distance de séparation d'au moins 20 cm de toutes les personnes et ne doit pas être colocalisé ou fonctionner en conjonction avec une autre antenne ou émetteur.