ASSEMBLY INSTRUCTIONS

ITEM: MV-7201-CT Seychelles Coffee Table

Please read all instructions carefully before starting the assembly process. Please be sure to unpack carefully as small parts may have come loose during travel from paradise. Helpful tip-do not fully tighten bolts until assembly is complete. It will make assembly easier.

HARDWARE PACK

NO.	DRAWING	DESCRIPTION	SIZE	Q'TY
A		Bolt	M8x35mm	8 PCS
B		Flat Washers	Ø16*1.0mm	8 PCS
C		Lock Washers	Ø12.5*2mm	8 PCS
D		Allen Key	M8	1 PCS

PART LIST

NO.	DRAWING	DESCRIPTION	Q'TY
1		Top	1 PC
2		Back Legs	4 PC

Step 1

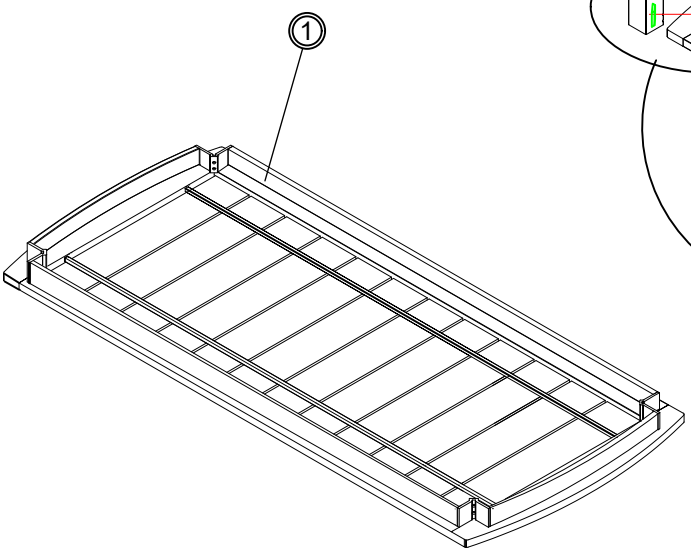

Place the seat top on a flat surface with the underside facing.

Step 2

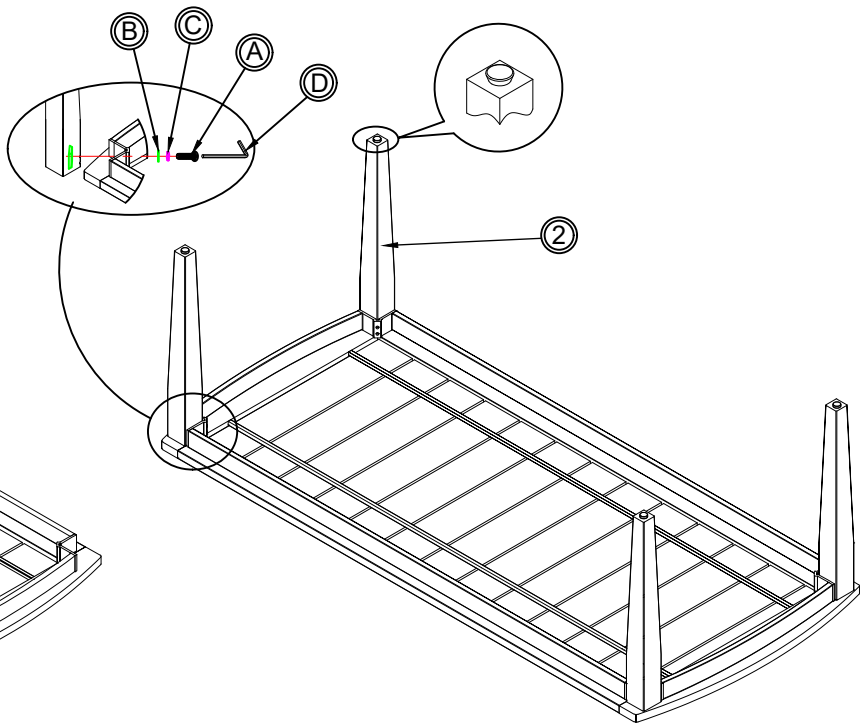

Lay top section upside down on flat surface. Align and insert leg sections into the top with bolts, flat washers and lock washers.

ASSEMBLY INSTRUCTIONS

ITEM: MV-7201-CT Seychelles Coffee Table

Please read all instructions carefully before starting the assembly process. Please be sure to unpack carefully as small parts may have come loose during travel from paradise. Helpful tip-do not fully tighten bolts until assembly is complete. It will make assembly easier.

Step 3

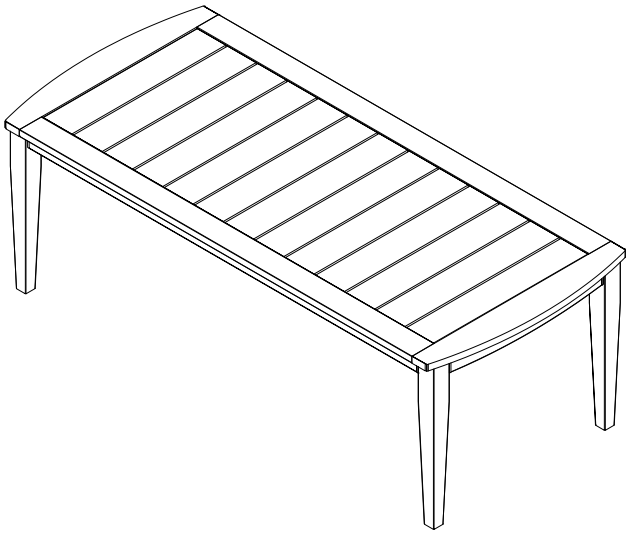

Turn the table upright.

HOW TO STAY IN LOVE
WITH YOUR NEW OUTDOOR FURNITURE.

Margaritaville Outdoor furniture and appearance will be enjoyed for years to come with proper care and maintenance. Please review the following instructions thoroughly, as failure to maintain your furniture may void its warranty.

Congratulations!

We hope the new furniture you've purchased will bring beauty, comfort and enjoyment to your home in the days months and years ahead.

Chances are, you're happy and excited with your new furniture as you and your family and friends admire it, welcoming it to your home. As much as you love your furniture now, that love can grow even stronger over time – if you keep your furniture beautiful with the right TLC.

We recommend covering your outdoor furniture with outdoor covers (available separately, via third-party retailers) when left outside during inclement weather. Covers must be properly sized, have a non- abrasive backing and be secured to prevent the finish from being damaged when the covers move in the wind. Premature finish wear from covers is not covered under the warranty.

Ensure frames and cushions are completely dry before they are covered.

Storing cushions separately indoors will prolong their life. Where possible, outdoor furniture should be stored inside during the off-season, especially in freezing environments.

Finally, to maintain or restore the luster of your furniture, after-market products are available to refresh UV protection and water repellency on both frames and cushions – apply as needed.

METAL

Margaritaville Outdoor furniture offers powder coated metal frames in aluminum. To clean, wash with a mild soap and warm water solution using a soft cloth. Do not use a coarse brush or harsh cleansers, as they may damage the finish. Always rinse and dry thoroughly after cleaning.

While drain holes are preventative, water can still gather in the frames, freeze, and cause the finish to crack and the frame to burst. Check holes for debris and clear them if necessary. Freeze damage is not covered by the warranty, so be diligent.

Coastal areas, as well as pool chlorine, are very harsh on all metals. Salt and chlorine must be cleaned from frames on a regular basis, or the finish may oxidize, discolor and/or blister. Salt & chlorine damage is not covered under the warranty.

WOVEN RESIN

Resin weaves are virtually maintenance free, however; it is recommended to clean the frames on a regular basis to prevent the build-up of dirt. To clean, wash with a mild soap and warm water solution using a soft cloth. Do not use a coarse brush or harsh cleansers. Always rinse and dry thoroughly after cleaning.

In extreme climates where temperatures can reach above 100°, place furniture in 50% shaded areas.

TEAK

Margaritaville Outdoor furniture uses true natural teak wood in our Teak collections. To clean, wash with a mild soap and warm water solution using a soft cloth. Do not use harsh cleaners or abrasives as they will damage the finish. If desired, you can apply a 'Teak-Shield' (sold separately, via third-party) to aid the longevity of the finish. When left exposed to the elements, teak will start its own natural weathering process, and slowly acquire the silver-gray patina that is the characteristic of untreated teak when exposed outdoors. Please note that during the weathering process, the appearance of the furniture may be uneven, but will eventually develop a beautiful, uniform, silvery-gray patina.

ROPE

Margaritaville Outdoor furniture is crafted with rope furniture out of all-weather rope, which is colorfast and stain resistant. Blot spills gently, and clean stains with mild soap and water and a soft cloth or very soft bristle brush. Do not use a coarse bush, or any abrasives or solvents when cleaning, as this may damage the rope and cause fraying.

STONE

Margaritaville Outdoor furniture offers occasional tables and fire tables in various stone materials.

For CONCRETE pieces, wash with a mild soap and warm water solution using a soft cloth as needed.

Through normal use, heat may cause the stone to expand and contract, and micro fissures may appear. These are easily filled with a touch up kit available through our customer care team or website. Do not expose to harsh chemicals, such as solvents, abrasive cleaners, or chlorine near a pool, as these may stain and/or degrade your finish prematurely, and are not covered under warranty.

For SINTERED STONE simply wipe down with mild soap and water to clean. It is not necessary to seal SINTERED STONE tops.

CUSHIONS & SLINGS

Margaritaville Outdoor furniture uses premium Sunbrella® solution dyed acrylic fabrics. It is recommended to clean the fabrics on a regular basis to prevent the build-up of dirt and the chance of mildew to form. Wipe light spills with a clean, dry cloth. With regards to stubborn stains or spills, please visit www.sunbrella.com for specific care and cleaning details.

Allow cushions to drain if wet. If soaked through, stand cushion on its side to allow faster draining. Ensure cushions are dry when covered, store cushions separately indoors when possible.

Clean SLING fabric using a mild soap and warm water solution and soft cloth.

MOVING PARTS & HARDWARE

For pieces with moving parts, i.e. wheels, swivels, or dining table leaves, periodically check and tighten all nuts and bolts as necessary to keep them secure. The same goes for assembly hardware on tables, swivel rockers, etc. Periodically exercise moving parts to keep them from locking up. This will ensure that all products continue to operate as they should.

GLIDES

Margaritaville Outdoor furniture uses sacrificial foot glides on the bottom of legs and horizontal surfaces to protect both the furniture and the surface they are being used on. Occasionally inspect the glides and replace when they are worn. Do not wait until the heads are worn completely through to the metal or damage to the deck/patio/lanai surface will occur. Many of the glides are adjustable to compensate for uneven surfaces and will loosen over time. It is suggested that you keep them tight unless using this adjustable feature. If glides are allowed to back out too far, they can fall out or snap off under stress. This is not covered under the warranty.