KINGSTON

TO ORDER PARTS, CALL: 1-877-252-7277
www.kingstonbrass.com

GKUSA15158

15" Solid Surface Arctic Stone Farmhouse Bar Sink

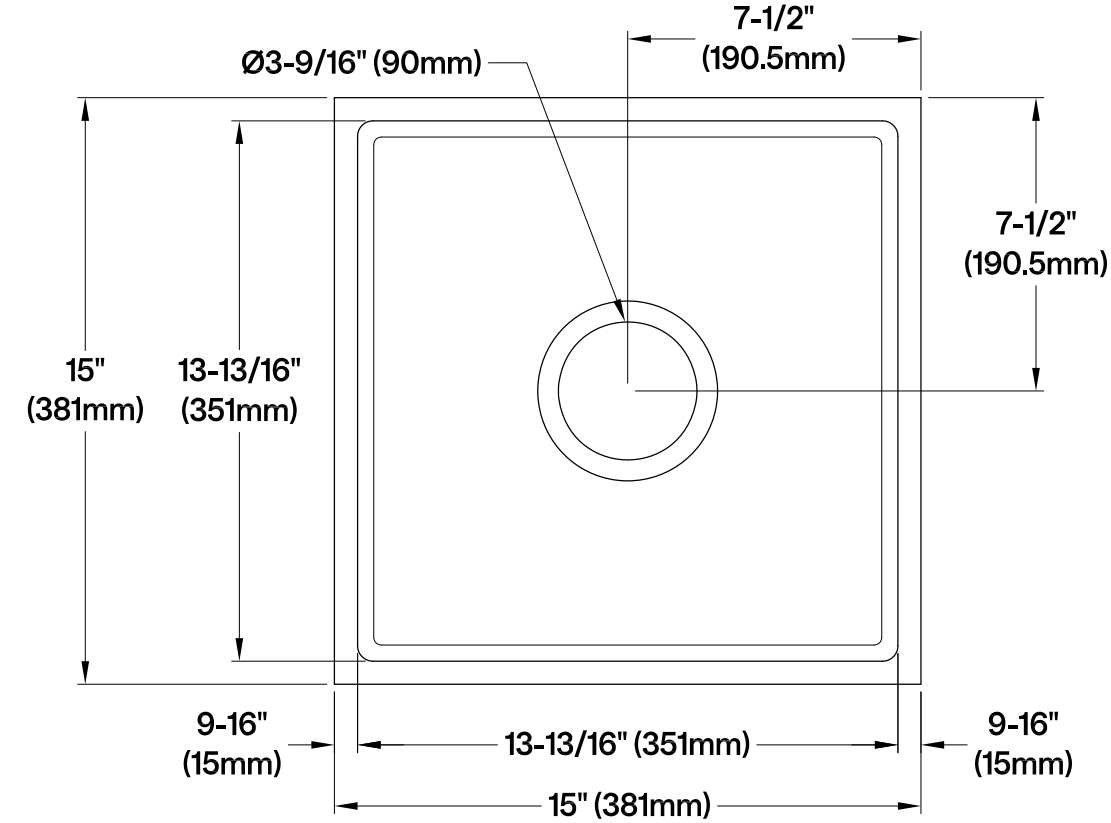

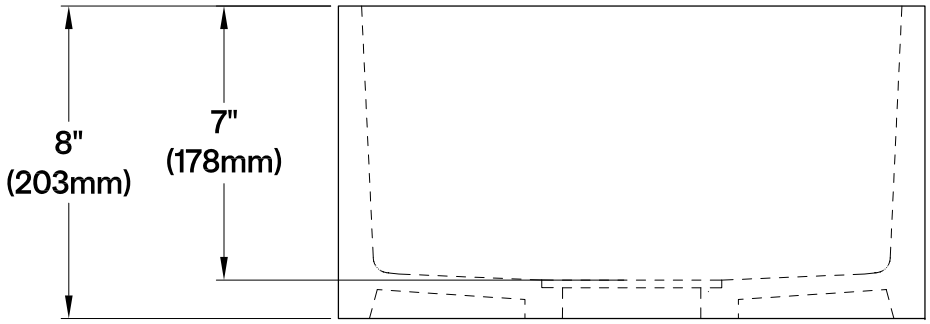

Strainer

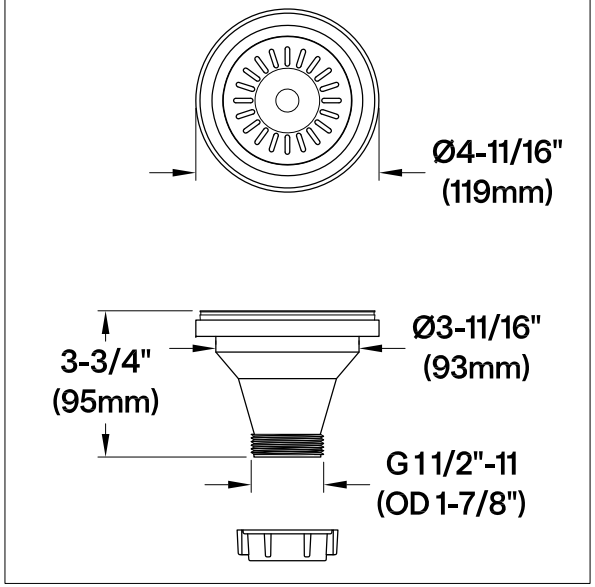

2026-04-A