Basic Non Fail-Safe actuator for controlling dampers in typical commercial HVAC applications.

- Torque motor 45 in-lb [5 Nm]
- Nominal voltage AC/DC 24 V
- Control On/Off, Floating point

Picture may differ from product

5-year warranty

Technical data

Electrical data	Nominal voltage	AC/DC 24 V
	Nominal voltage frequency	50/60 Hz
	Nominal voltage range	AC 19.2...28.8 V / DC 21.6...28.8 V
	Power consumption in operation	1.5 W
	Power consumption in rest position	0.2 W
	Transformer sizing	2.5 VA
	Electrical Connection	Screw terminal (for 26...14 AWG wire)
	Overload Protection	electronic throughout 0...95° rotation
Functional data	Torque motor	45 in-lb [5 Nm]
	Direction of motion motor	selectable with switch 0/1
	Manual override	external push button
	Angle of rotation	Max. 95°
	Angle of rotation note	adjustable with mechanical stop
	Running Time (Motor)	95 s / 90°
	Running time motor note	constant, independent of load
	Sound power level, motor	35 dB(A)
	Position indication	Mechanical, 30...65 mm stroke
Safety data	Power source UL	Class 2 Supply
	Degree of protection NEMA/UL	NEMA 1
	Housing	UL Enclosure Type 1
	Agency Listing	cULus acc. to UL60730-1A/-2-14, CAN/CSA E60730-1:02 CE acc. to 2014/30/EU and 2014/35/EU
	Quality Standard	ISO 9001
	UL 2043 Compliant	Suitable for use in air plenums per Section 300.22(C) of the NEC and Section 602 of the IMC
	Ambient humidity	Max. 95% RH, non-condensing
	Ambient temperature	-22...122°F [-30...50°C]
	Storage temperature	-40...176°F [-40...80°C]
	Servicing	maintenance-free
Weight	Weight	1.4 lb [0.65 kg]
Materials	Housing material	UL94-5VA

Product features

Application

For On/Off and floating point control of dampers in HVAC systems. Actuator sizing should be done in accordance with the damper manufacturer's specifications.

The actuator is mounted directly to a damper shaft from 1/4" up to 5/8" in diameter by means of its standard universal clamp. Shafts up to 3/4" diameter can be accommodated by an accessory clamp.

Operation

The actuator is not provided with and does not require any limit switches, but is electronically protected against overload. The anti-rotation strap supplied with the actuator will prevent lateral movement.

The LMB series provides 95° of rotation and a visual indicator which indicates position of the actuator. When reaching the damper or actuator end position, the actuator automatically stops. The gears can be disengaged with manual release on the actuator cover.

The LMB24-3.. actuators use a sensorless brushless DC motor, which is controlled by an Application Specific Integrated Circuit (ASIC). The ASIC monitors and controls the actuator's rotation and provides a digital rotation sensing (DRS) function to prevent damage to the actuator in a stall condition. Power consumption is reduced in holding mode.

The LMB24-3-S version is provided with one built-in auxiliary switch. This SPDT switch is provided for safety interfacing or signaling, for example, for fan start-up. The switching function is adjustable 0 to 95°. The auxiliary switch is double insulated so an electrical ground connection is not necessary.

Add-on auxiliary switches or feedback potentiometers are easily fastened directly onto the actuator body for signaling and switching functions.

Typical specification

Floating point, on/off control damper actuators shall be electronic direct-coupled type, which require no crank arm and linkage and be capable of direct mounting to a shaft from 1/4" to 5/8". Shafts up to 3/4" diameter can be accommodate with an accessory clamp. Actuators shall have brushless DC motor technology and be protected from overload at all angles of rotation. Actuators shall have reversing switch and manual override on the cover. If required, actuator will be provided with screw terminal strip for electrical connections [LMB(X)24-3-T]. If required, actuators shall be provided with one adjustable SPDT auxiliary switch. Actuators with auxiliary switches must be constructed to meet the requirements for double insulation so an electrical ground is not required to meet agency listings. Run time shall be constant and independent of torque. Actuators shall be cULus listed, have a 5-year warranty, and be manufactured under ISO 9001 International Quality Control Standards. Actuators shall be as manufactured by Belimo.

Accessories

Electrical accessories

Description	Type
Feedback potentiometer 140 Ω add-on, grey	P140A GR
Feedback potentiometer 500 Ω add-on, grey	P500A GR
Feedback potentiometer 1 kΩ add-on, grey	P1000A GR
Feedback potentiometer 2.8 kΩ add-on, grey	P2800A GR
Feedback potentiometer 5 kΩ add-on, grey	P5000A GR
Feedback potentiometer 10 kΩ add-on, grey	P10000A GR
Auxiliary switch 1x SPDT add-on	S1A
Auxiliary switch 2x SPDT add-on	S2A
	ZS-T

Electrical installation

AC/DC 24 V, on/off

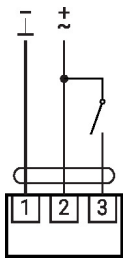

AC/DC 24 V, 3-point

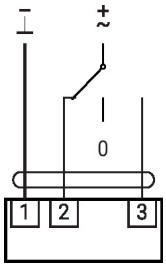

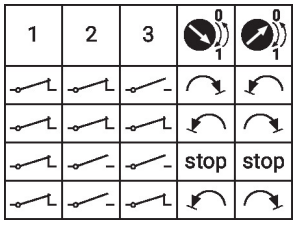

Dimensions
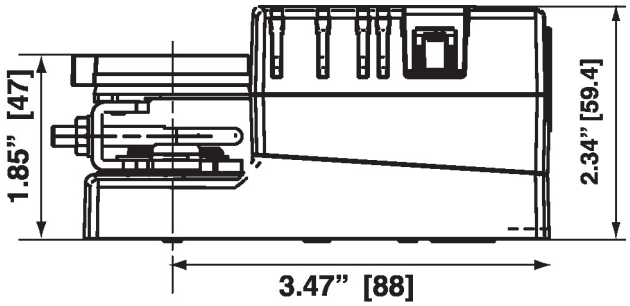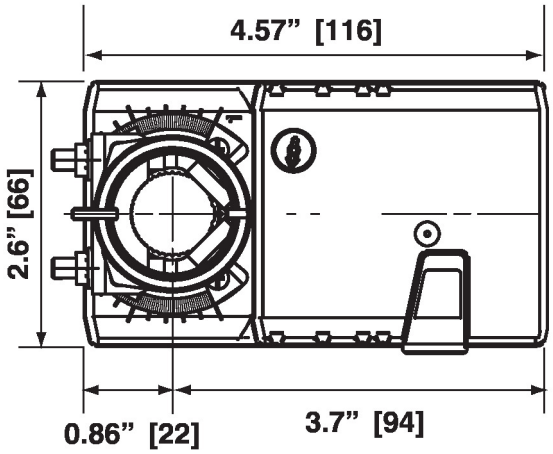
PC