ASSEMBLY AND INSTALLATION INSTRUCTIONS

W0423

WARNING: TO AVOID RISK OF ELECTRICAL SHOCK, BE SURE TO SHUT OFF POWER WHILE INSTALLING OR SERVICING THIS FIXTURE.

NOTE: 1. Before installing, consult local electrical codes for wiring and grounding requirements.
2. READ AND SAVE THESE INSTRUCTIONS.

Hardware Package (included):

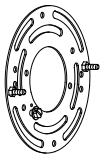
Mounting Plate Unit (A)


Mounting Screw (B)


Wire Connector (C)


Bolt Nut (D)

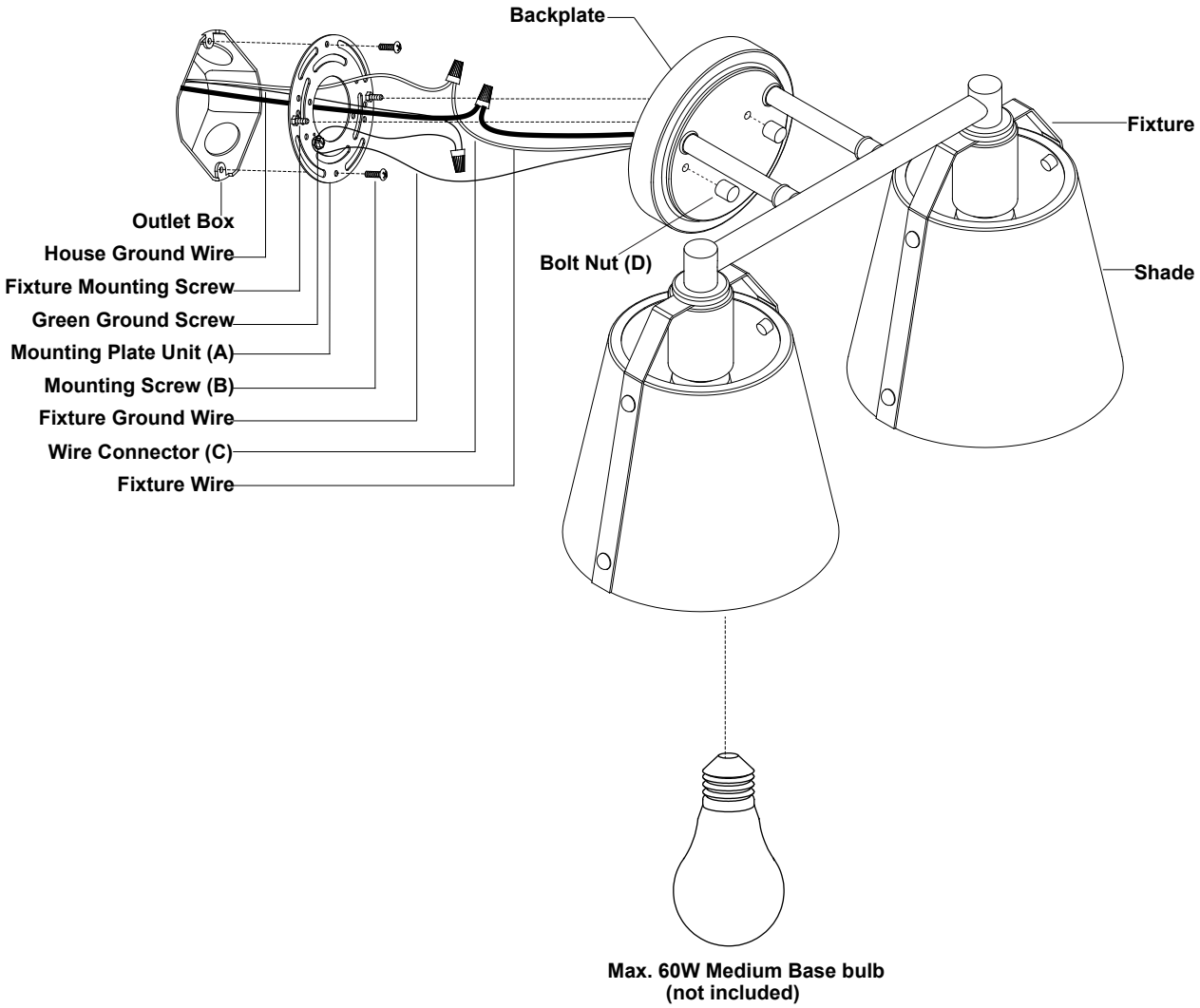

VAXCEL

221025

Installation Steps

Turn off the power at fuse or circuit box.

1. Unscrew the two bolt nuts (D), remove the mounting plate unit (A) from the backplate.

2. Attach the mounting plate unit (A) to the outlet box by using two mounting screws (B). Adjust the length of the preinstalled fixture mounting screws if necessary.
   Note: Make sure that two fixture mounting screws are lined up horizontally to make the fixture level.

3. Pull out the source wires from the outlet box. Make wire connections using wire connectors (C) as follows:
   • Connect the hot wire (black insulation) from the fixture to the black wire from the power source.
   • Connect the neutral wire (white insulation) from the fixture to the white wire from the power source.
   • Attach the fixture ground wire (bare wire) to the mounting plate unit (A) with green ground screw, then depending on local code, connect it to the house ground wire with the wire connector (C).
   Carefully put all of the wires back into the outlet box.

4. Attach the backplate of the fixture to the mounting plate unit (A) by aligning and inserting the two fixture mounting screws into set holes on backplate, then secure them with two bolt nuts (D).

5. Install 2 x 60W Max. medium base bulbs (not included). Check relamping label at socket area or packaging for maximum wattage allowed.

Turn on the power at fuse or circuit box.

The following parts are available for re-order if damaged or missing.

Spare Parts List:

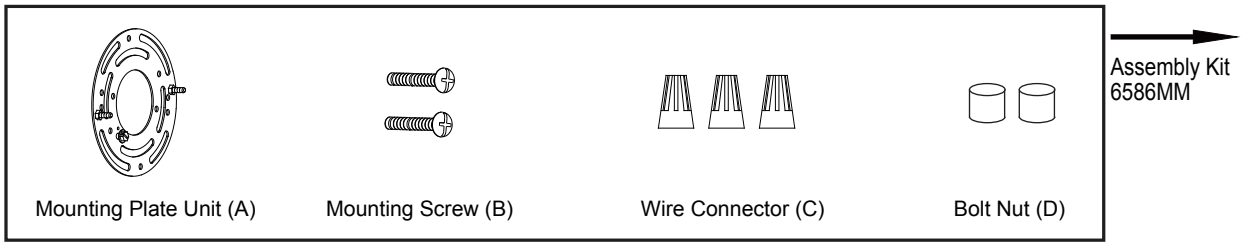

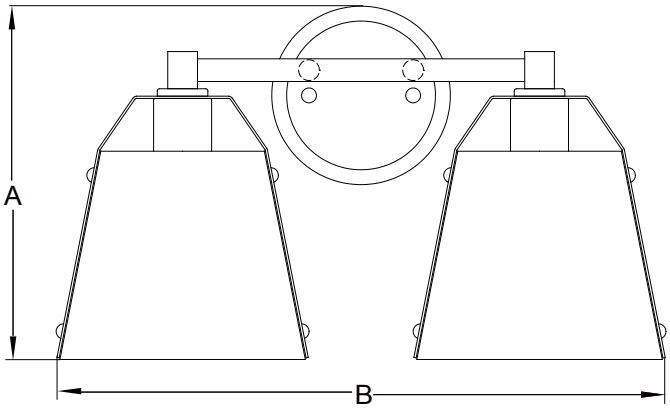

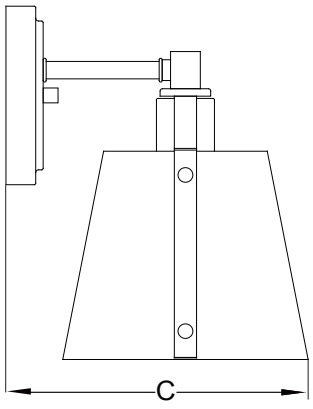

A: 9-1/2"

B: 16"

C: 8"

VAXCEL

221025