ASSEMBLY AND INSTALLATION INSTRUCTIONS

W0558 / W0559

WARNING: TO AVOID RISK OF ELECTRICAL SHOCK, BE SURE TO SHUT OFF POWER WHILE INSTALLING OR SERVICING THIS FIXTURE.

NOTES: 1. Before installing, consult local electrical codes for wiring and grounding requirements.
2. Read and save this instructions.

Hardware Package (included):

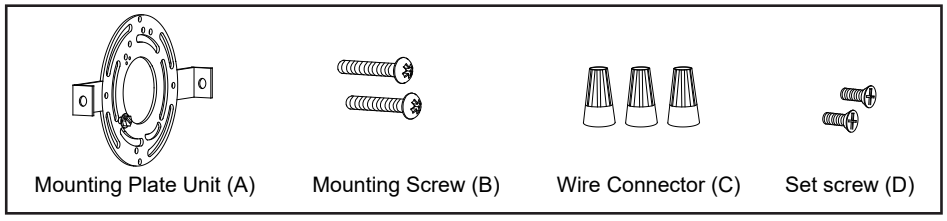

Mounting Plate Unit (A) | Mounting Screw (B) | Wire Connector (C) | Set screw (D)

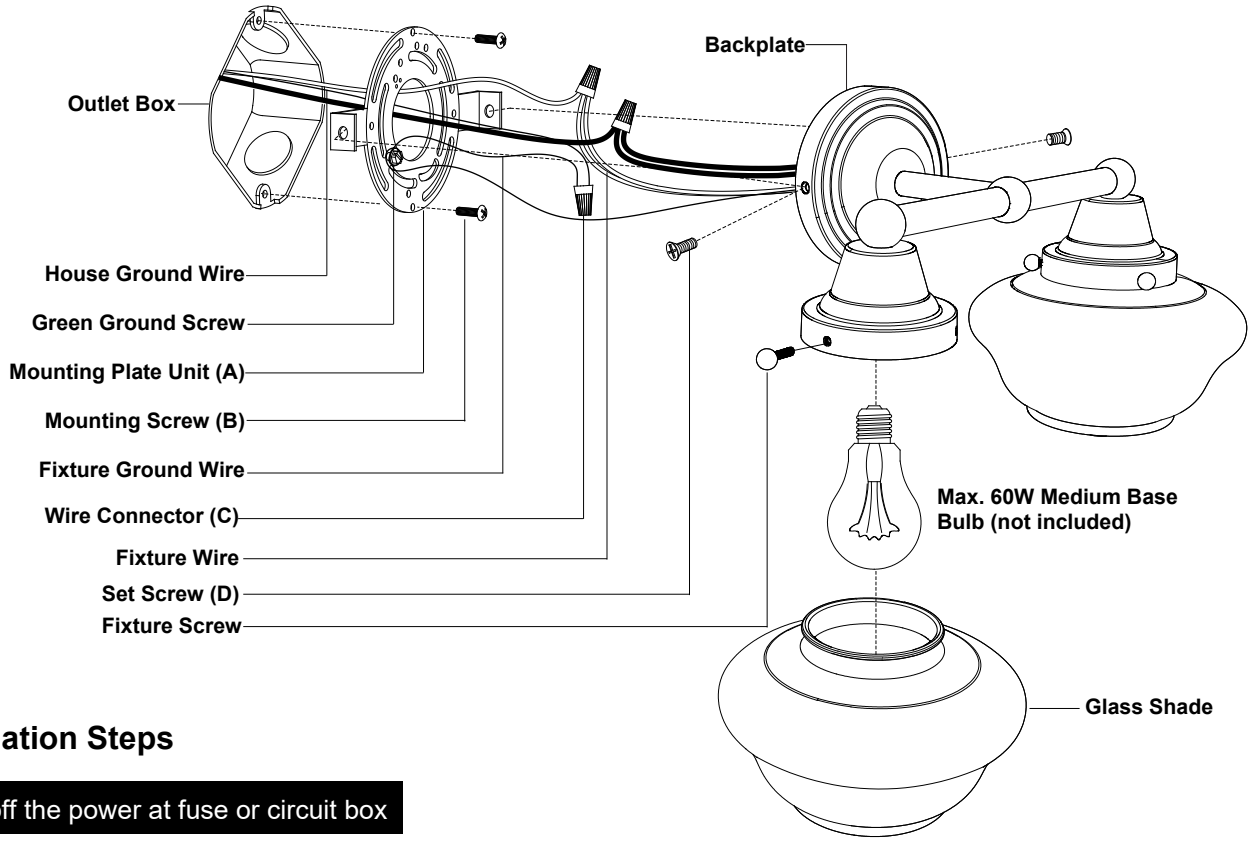

Installation Steps

Turn off the power at fuse or circuit box

1. Unscrew the two set screws (D) and remove the mounting plate unit (A) from the backplate.

2. Attach the mounting plate unit (A) to the outlet box by using two mounting screws (B).
Note: Make sure that two set holes are lined up horizontally to make the fixture level.

3. Pull out the source wires from the outlet box. Make wire connections using wire connectors (C) as follows:
   - Connect the hot wire (black insulation) from the fixture to the black wire from the power source.
   - Connect the neutral wire (white insulation) from the fixture to the white wire from the power source.
   - Attach the fixture ground wire (bare wire) to the mounting plate unit (A) with the green ground screw, then connect it to the house ground wire with the wire connector (C).

   Carefully put all of the wires back into the outlet box.

VAXCEL

250928

4. Attach the backplate of the fixture to the mounting plate unit (A) by aligning holes, secure the two set screws (D) from the side holes of the backplate into the side holes of the mounting plate unit (A).

5. Attach the fixture to the mounting plate unit (A), and then secure it with two set screws (D).

6. Install 2 x 60W Max. medium base bulbs (not included).
   See relamping label at socket area or packaging for maximum wattage allowed.

7. Attach the glass shades to the fixture, and then secure them with three fixture screws.

Turn on the power at fuse or circuit box

The following parts are available for reorder if damaged or missing.

Spare Parts List:

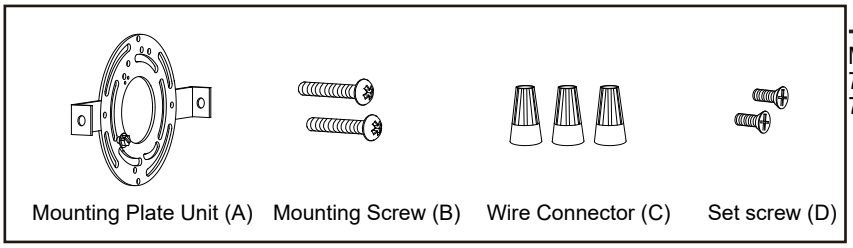

Mounting Hardware
7124MM (1SET) for W0558
7125MM (1SET) for W0559

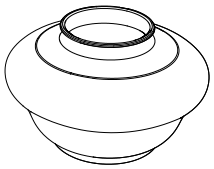

Glass Shade
10546OP

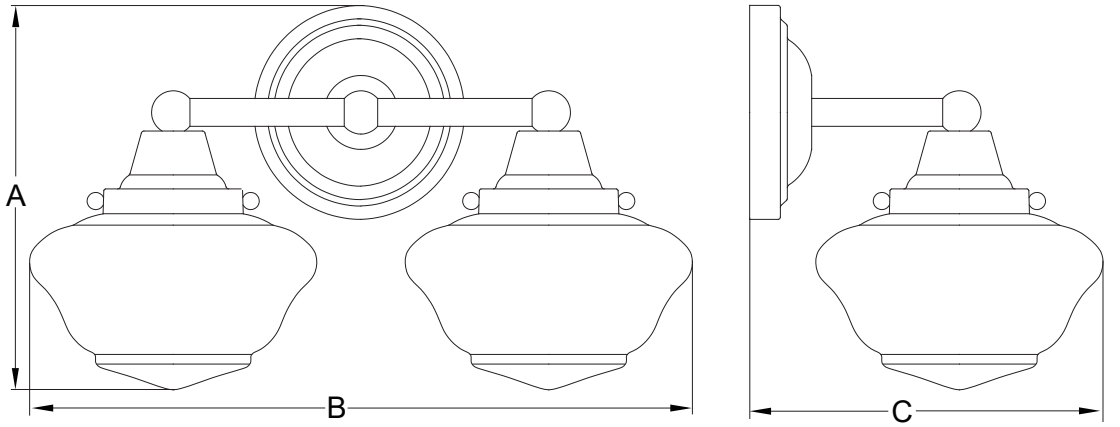

A: 8-3/4"

B: 15"

C: 7-3/4"

1 Year Warranty

Vaxcel warrants all of our products against defects in workmanship and finishes for one year following the date of shipment.

Exclusions: This warranty does not include the failure of products from extreme acts of nature; environmental conditions not suited for the products intended use; operation in temperatures outside of the range specified in the instruction manual; usage with improper power supply, power surges or dips. For coastal locations, some corrosion is considered normal for the environment.

Vaxcel reserves the right to repair, replace or issue a credit for any properly installed product, provided it is returned per RMA instruction. This warranty is limited to the cost of the product only and does not extend to transportation, installation or replacement costs.

How can warranty service be obtained?
info@vaxcel.com
1-800-482-9235

VAXCEL
250928