ASSEMBLY AND INSTALLATION INSTRUCTIONS

P0392

WARNING: TO AVOID RISK OF ELECTRICAL SHOCK, BE SURE TO SHUT OFF POWER BEFORE INSTALLING OR SERVICING THIS FIXTURE.

NOTES: 1. Before installing, consult local electrical codes for wiring and grounding requirements.
2. Read and save this instruction.

Hardware Package (included):

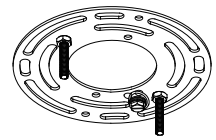
Mounting Plate Unit (A)


Mounting Screw (B)

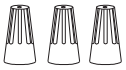
Wire Connector (C)


Bolt Nut (D)


Long Threaded Pipe (E)


Hex Nut (F)


Decorative Cup (G)


Finial (H)

Installation Steps

Turn off the power at fuse or circuit box.

1. Attach mounting plate unit (A) to the outlet box using two mounting screws (B).

2. Attach the long threaded pipe (E) to coupling.

3. Install 4 X 60W Max. medium base bulbs (not included). See relamping label at socket area or packaging for maximum wattage allowed.

4. Slip the plastic plate and decorative cup (G) up through the long threaded pipe (E), and then secure them with the finial (H).
NOTE: The depth of hex nut in long threaded pipe may need to be adjusted to properly fit the plastic plate. The plastic plate should be flatly laid on three brackets, and the frosting of the plastic plate should be faced down.

5. Rod Connections:
   a. Thread the fixture wire from the fixture through the lower rod, and then secure the lower rod onto fixture using the threaded pipe.
   b. Thread the fixture wire through the middle rod, and then secure the middle rod onto the lower rod using the threaded pipe.
   c. Thread the fixture wire through the upper rod, and then secure the upper rod onto the middle rod using the threaded pipe.
   Note: Length adjustable from 15-3/4" to 69-3/4". Use fewer rods if shorter length is desired.

6. Thread the fixture wire through the canopy kit, and then secure the rod assembly to the set hreaded pipe of the canopy kit.

VAXCEL

230213

8. Pull out the source wires from the outlet box. Make wire connections using wire connectors (C) as follows:
   ---Connect the smooth-coated wire (marked) from the fixture to the black wire from the power source.
   ---Connect the ribbed-coated wire (unmarked) from the fixture to the white wire from the power source.
   ---Attach the fixture ground wire to the mounting plate unit (A) with the green ground screw, and then connect it to the house ground wire with a wire connector (C).
   Carefully put the wires back into the outlet box.

9. Attach the canopy kit to the mounting plate unit (A) by inserting the fixture mounting screws, and then secure it with two bolt nuts (D).

Fig. 1

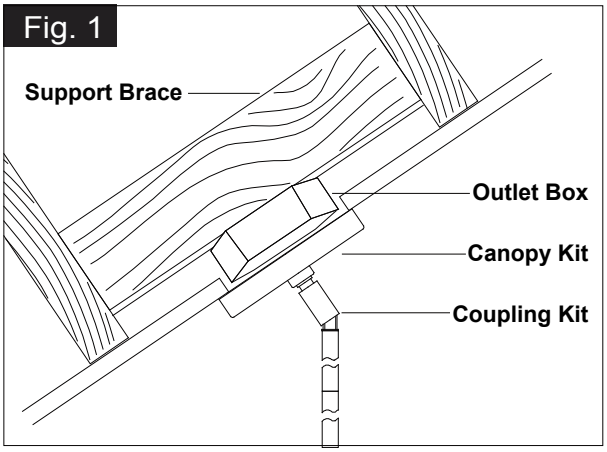

10. Angled mounting recommended for a vaulted or angled ceiling. (See Fig. 1)

Turn on the power at fuse or circuit box.

The following parts are available for re-order if damaged or missing.

Spare Parts List:

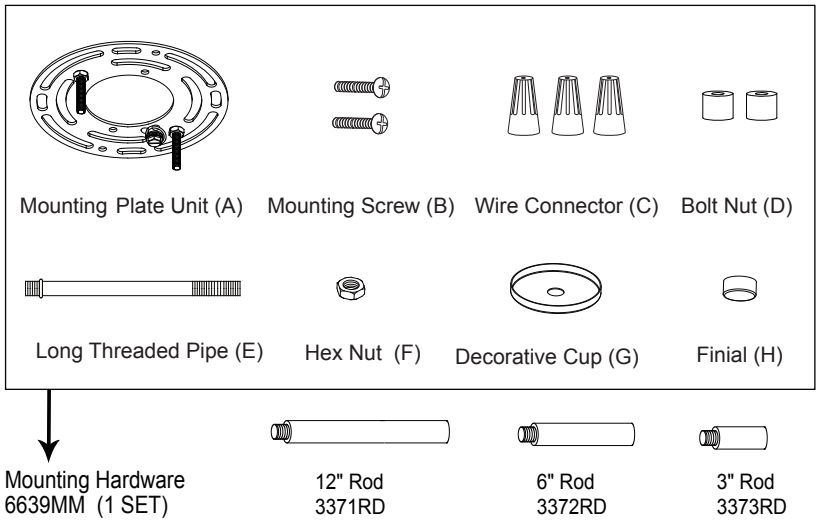

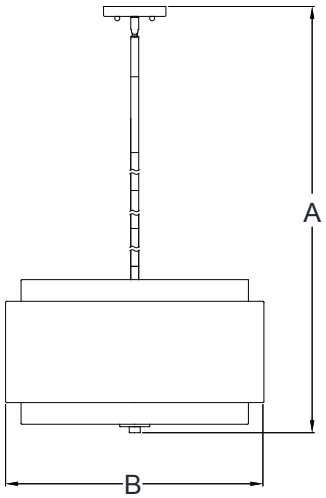

A: 15-3/4"~69-3/4" B: 20-1/2"

1 Year Warranty

Vaxcel warrants all of our products against defects in workmanship and finishes for one year following the date of shipment.

Exclusions: This warranty does not include the failure of products from extreme acts of nature; environmental conditions not suited for the products intended use; operation in temperatures outside of the range specified in the instruction manual; usage with improper power supply, power surges or dips. For coastal locations, some corrosion is considered normal for the environment.

Vaxcel reserves the right to repair, replace or issue a credit for any properly installed product, provided it is returned per RMA instruction. This warranty is limited to the cost of the product only and does not extend to transportation, installation or replacement costs.

How can warranty service be obtained?
info@vaxcel.com
1-800-482-9235

VAXCEL

230213