ASSEMBLY AND INSTALLATION INSTRUCTIONS

T0080

WARNING: Turn off the main power at circuit breaker before installing fixture.
AVERTISSEMENT: Coupez la source d'alimentation principale au panneau central de disjoncteurs avant d'installer le luminaire.

NOTE: 1. Before installing, consult local electrical codes for wiring and grounding requirements.
2. READ AND SAVE THESE INSTRUCTIONS.

Parts:

Parts Number (5046MM)

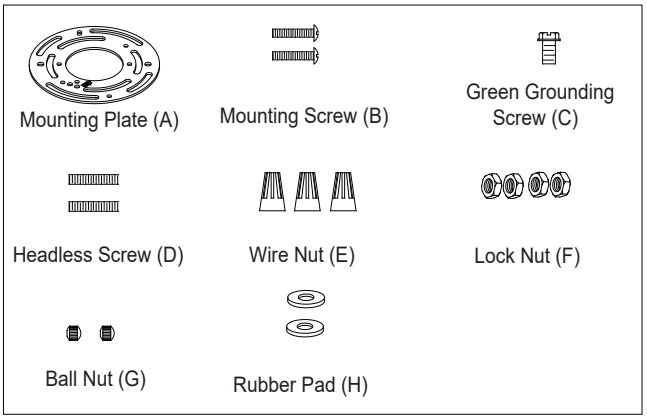

Parts Number (9587CE)

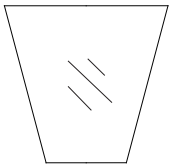

Front Glass panel (I) (X1)

Parts Number (9571CE)

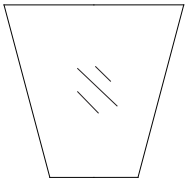

Side Glass Panel (K) (X3)

Parts Number (9570CE)

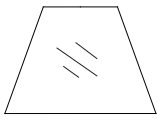

Upper Glass panel (J) (X4)

Parts Number (5005DD)



Candle Tube (L) (X3)

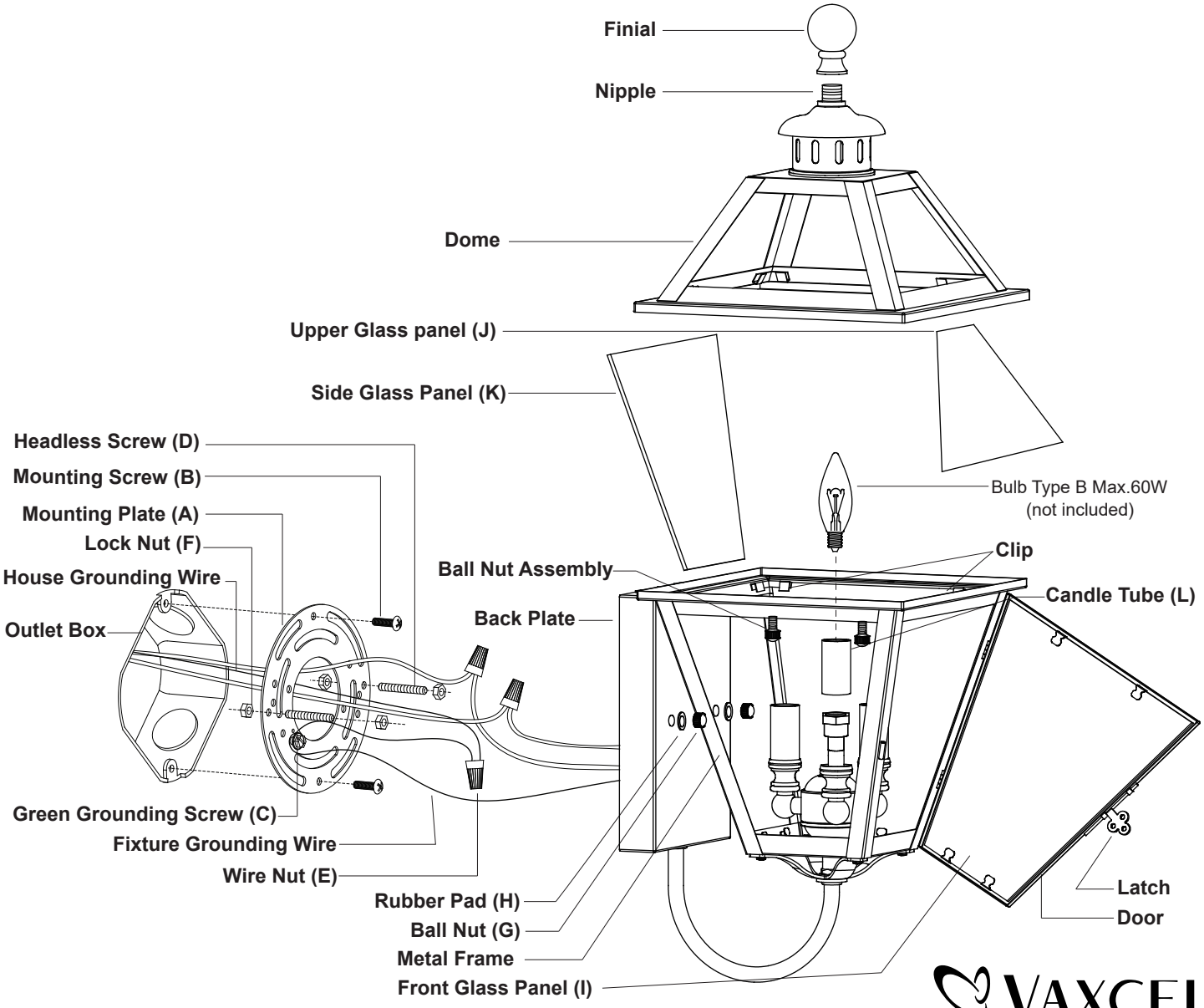

VAXCEL

240703

1. Take a side glass panel and gently place the side glass panel into the metal frame in place, then pressing the clips of the metal frame to secure the side glass panel. (See Fig. 1)
2. Repeat this process to complete all glass panel installation of side glass panels and front glass panel.
3. Take an upper glass panel and gently place the upper glass panel into the dome in place, then pressing the clips of the dome to secure the upper glass panel. (See Fig. 2) Repeat with other upper glass panels.
4. Secure the finial onto the nipple, then attach the dome to the metal frames, secure it with the ball nut assemblies.
5. Thread two headless screws to the mounting plate, and secure them with four lock nuts (two on each side of the mounting plate). Adjust the length of the headless screws if necessary.
6. Attach the mounting plate to the outlet box by using two mounting screws.
7. Pull out the outlet wires and the house grounding wire from the outlet box. Make wire connections by using the wire nuts:
   ---Connect the black (hot) wire from the fixture to the black (hot) wire from the power source.
   ---Connect the white (neutral) wire from the fixture to the white (neutral) wire from the power source.
   ---Attach the fixture grounding wire to the mounting plate with the green grounding screw. Then connect it to the house grounding wire with a wire nut.
   Carefully put the wires back into the outlet box.
8. Attach the back plate to the mounting plate by inserting the headless screws, then secure it with two rubber pads and two ball nuts.
   Note: With silicone caulking compound, caulk completely around where the back plate meets with the wall surface to prevent water from seeping into the outlet box.
9. Open the door of the fixture by pushing up the latch, attach the candle tube onto the socket.
10. Install bulbs (not included). See relamping label at socket area or packaging for maximum allowed wattage. Close the door of the fixture by pulling down the latch.
11. Turn on the power at the main fuse or circuit breaker box.

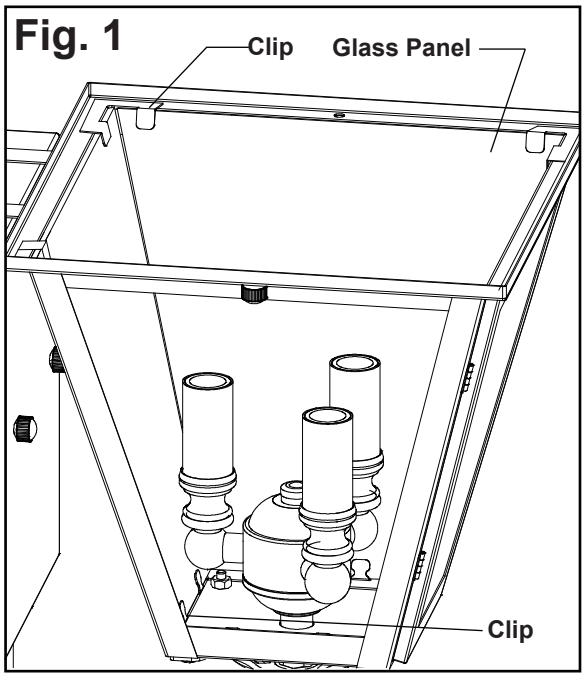

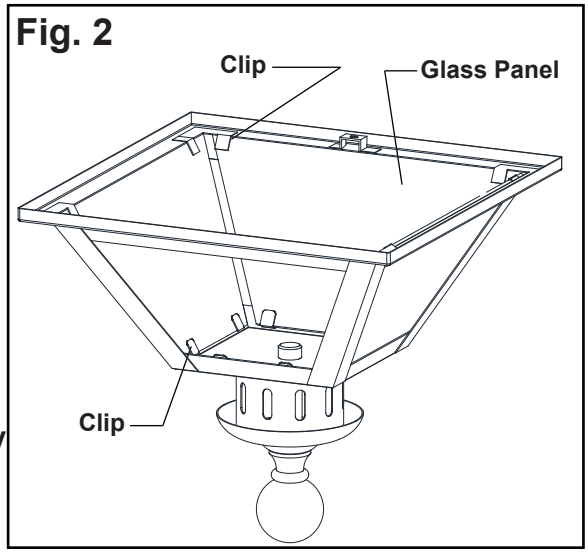

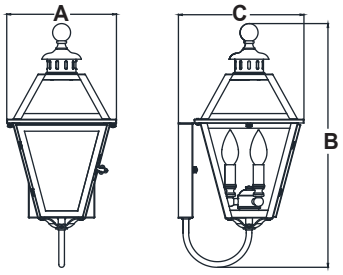

A: 12"
B: 26-3/4"
C:13-5/8"

1 Year Warranty

Vaxcel warrants all of our products against defects in workmanship and finishes for one year following the date of shipment.

Exclusions: This warranty does not include the failure of products from extreme acts of nature; environmental conditions not suited for the products intended use; operation in temperatures outside of the range specified in the instruction manual; usage with improper power supply, power surges or dips. For coastal locations, some corrosion is considered normal for the environment.

Vaxcel reserves the right to repair, replace or issue a credit for any properly installed product, provided it is returned per RMA instruction. This warranty is limited to the cost of the product only and does not extend to transportation, installation or replacement costs.

How can warranty service be obtained?
info@vaxcel.com
1-800-482-9235

VAXCEL
240703