ASSEMBLY AND INSTALLATION INSTRUCTIONS

W0444

WARNING: TO AVOID RISK OF ELECTRICAL SHOCK, BE SURE TO SHUT OFF POWER WHILE INSTALLING OR SERVICING THIS FIXTURE.

NOTES: 1. Before installing, consult local electrical codes for wiring and grounding requirements.
2. Read and save these instructions.

Hardware Package (included):



Mounting Screw (A)



Wire Connector (B)

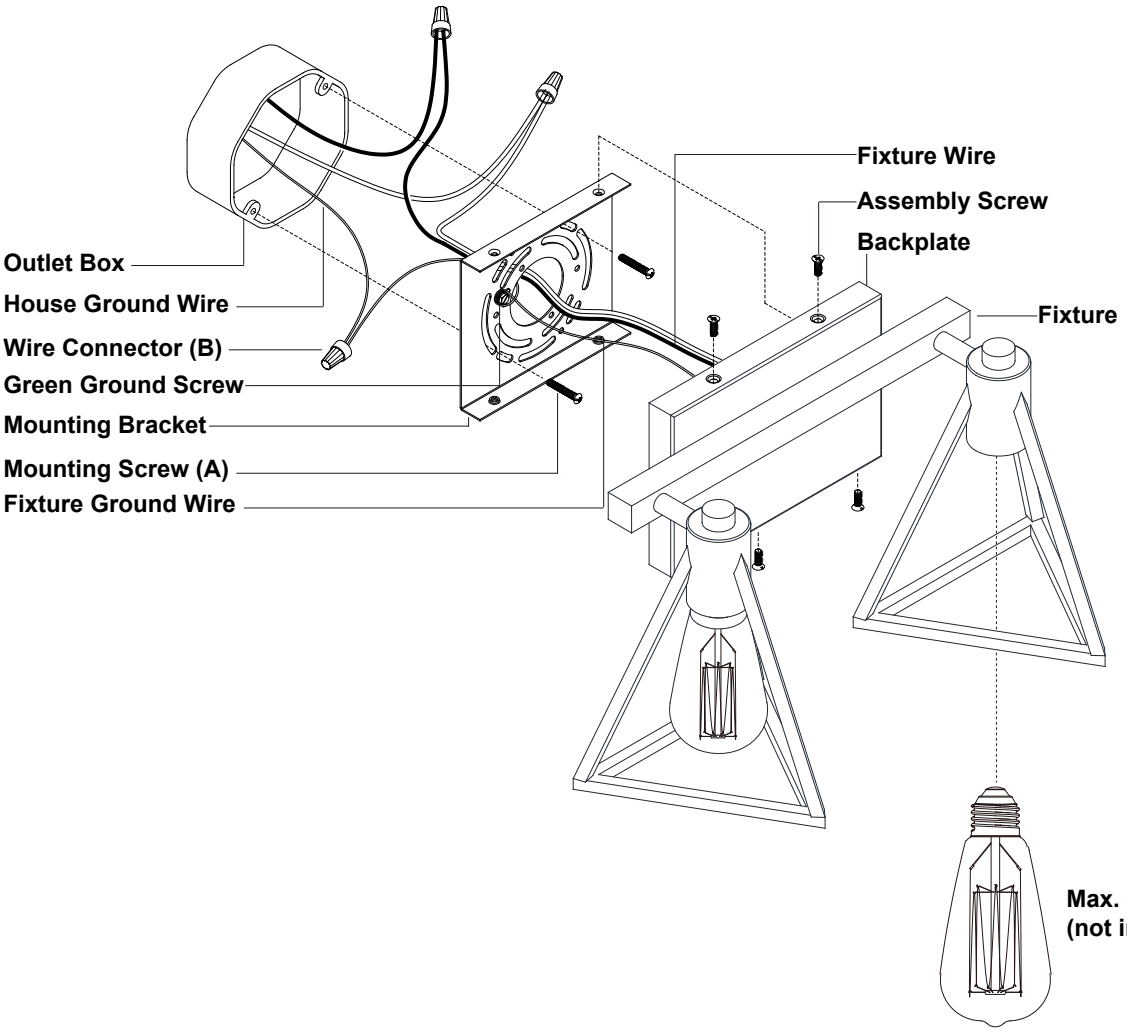

VAXCEL

230612

Installation Steps

Turn off the power at fuse or circuit box.

1. Unscrew the four assembly screws, remove the mounting bracket from the backplate.

2. Attach mounting bracket to the outlet box by using two mounting screws (A).

3. Pull out the source wires from the outlet box. Make wire connections using wire connectors (B) as follows:
   - Connect the hot wire (black insulation) from the fixture to the black wire from the power source.
   - Connect the neutral wire (white insulation) from the fixture to the white wire from the power source.
   - Attach the fixture ground wire (bare wire) to the mounting bracket with green ground screw, then depending on local code, connect it to the house ground wire with the wire connector (B).

   Carefully put all of the wires back into the outlet box.

4. Attach the fixture to the mounting bracket, then secure it with four assembly screws.

5. Install 2 X 60W Max. medium base vintage bulbs (not included). See relamping label at socket area or packaging for maximum wattage allowed.

Turn on the power at fuse or circuit box.

The following parts are available for reorder if damaged or missing.

Spare Parts List:

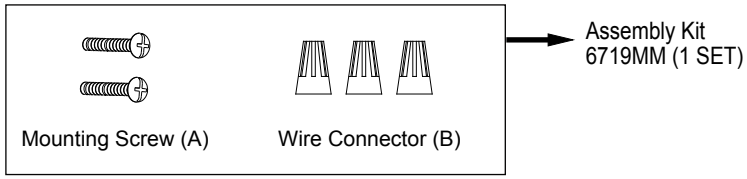

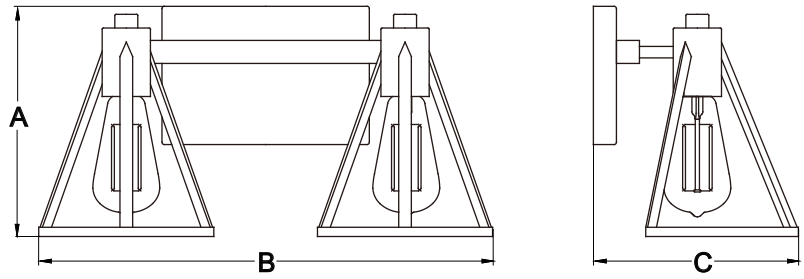

A: 8-1/4"
B: 15-3/4"
C: 7-1/2"

1 Year Warranty

Vaxcel warrants all of our products against defects in workmanship and finishes for one year following the date of shipment.

Exclusions: This warranty does not include the failure of products from extreme acts of nature; environmental conditions not suited for the products intended use; operation in temperatures outside of the range specified in the instruction manual; usage with improper power supply, power surges or dips. For coastal locations, some corrosion is considered normal for the environment.

Vaxcel reserves the right to repair, replace or issue a credit for any properly installed product, provided it is returned per RMA instruction. This warranty is limited to the cost of the product only and does not extend to transportation, installation or replacement costs.

How can warranty service be obtained?
info@vaxcel.com
1-800-482-9235

VAXCEL
230612