WYNDHAM
COLLECTION

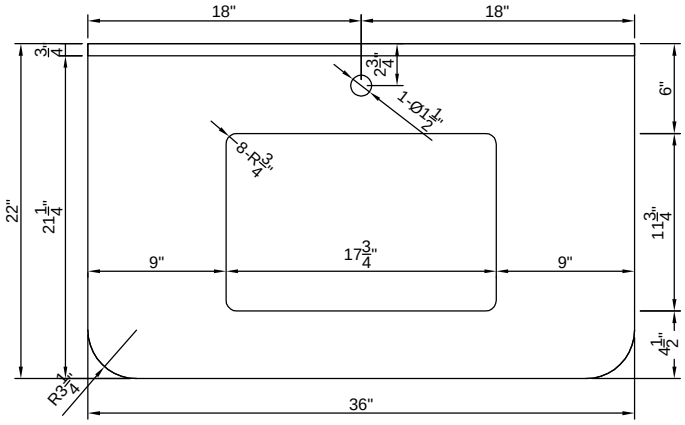

TOP VIEW OF VANITY CABINET

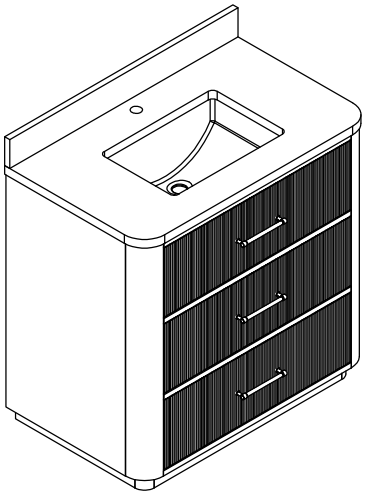

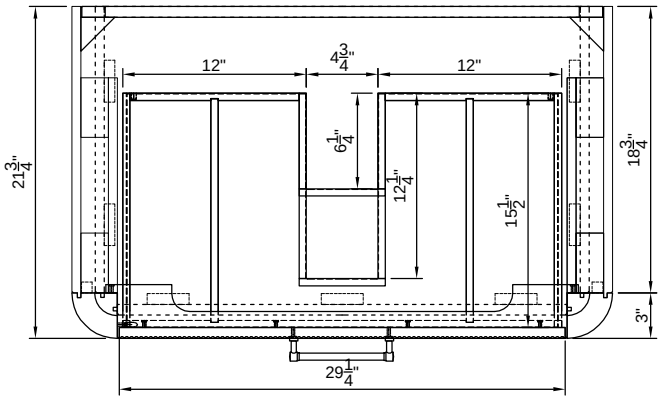

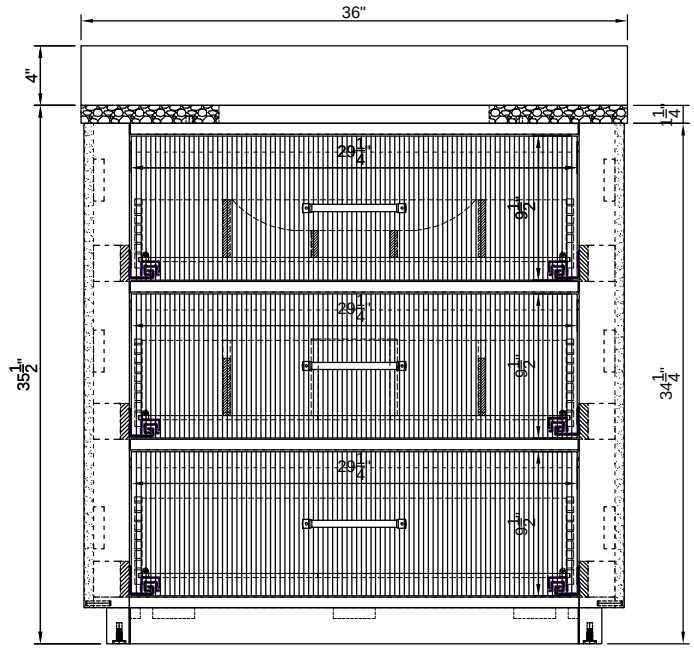

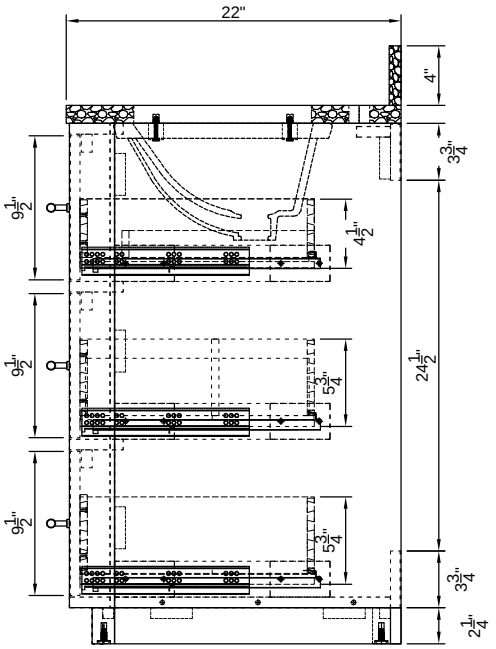

*Note:All measurements are ±1/4"

WC-9898-36SGL