ASSEMBLY AND INSTALLATION INSTRUCTIONS

P0057 / P0059 / P0061 / P0063

WARNING: BE SURE TO SHUT OFF POWER AT THE MAIN FUSE OR CIRCUIT BREAKER BOX BEFORE INSTALLING OR SERVICING THIS FIXTURE.

NOTE: 1. Before installing, consult local electrical codes for wiring and grounding requirements.
2. READ AND SAVE THESE INSTRUCTIONS.

Fig.1

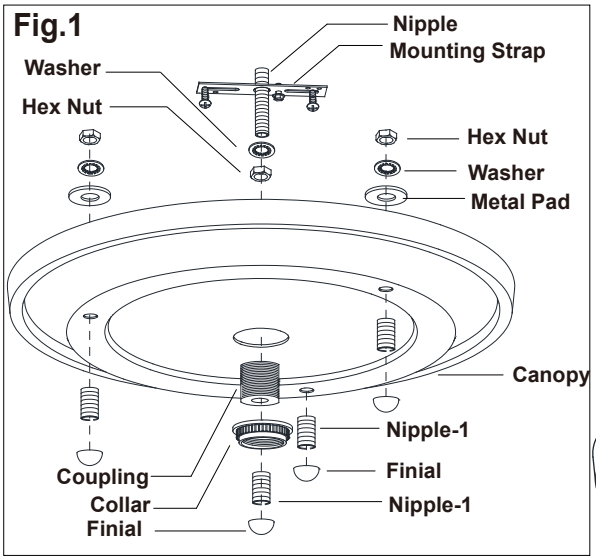

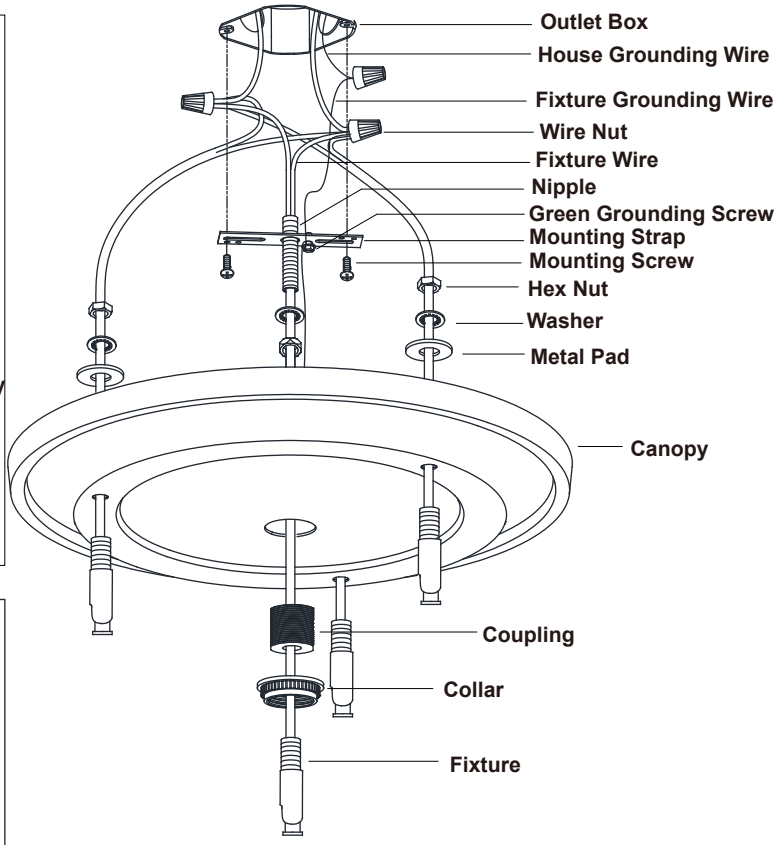

Fig.2

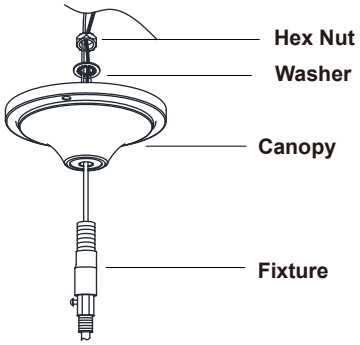

Remove the canopy from the fixture before installation

Fig.3

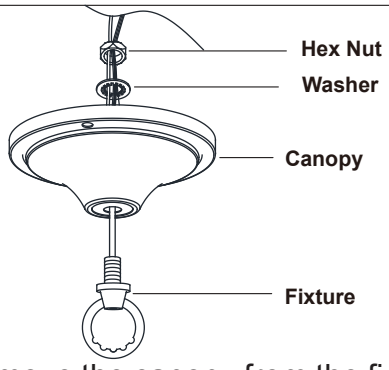

Remove the canopy from the fixture before installation

Fig.4

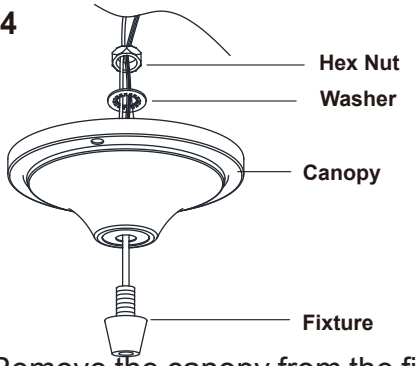

Remove the canopy from the fixture before installation

Fig.5

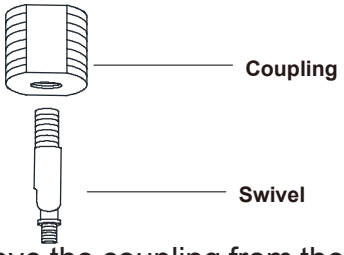

Remove the coupling from the swivel before installation

VAXCEL

130709

1. Carefully unpack the fixture, lay out the fixture on a clean surface.
2. Use suitable tools to unscrews the hex nuts from the canopy, remove the nipple-1, metal pad and finial from the canopy. Save the finial. (See Fig.1)
3. Unscrew the finial and remove the coupling and collar.
4. Attach the nipple to the coupling.
5. Attach the nipple to the mounting strap, then secure it with a washer and hex nut.
6. Attach the mounting strap to the outlet box by using two mounting screws.
7. **Install the Fixture.** (the Fixture is sold separately)
   a. Remove the canopy or coupling from the fixture before installation (See Fig.2 ~ 5)
   b. **Side fixture :** Thread the fixture wire through the canopy as showed, and then secure the fixture to the canopy with metal pad, washer and hex nut.
   c**. Center Fixture:** Thread the fixture wire through the collar and canopy. Slip the collar, canopy until they rest on top of the fixture. Next, connect the fixture to coupling.
8. Cut any excess fixture wires leaving only about 8" (20cm) length from the top end of nipple-1, then strip off 3/4"the fixture wires of plastic from each end.
9. Pull out the outlet wires and house grounding wire from the outlet box. Make wire connections using the wire nuts:
   ---All black wires from rods to the black wire from power source.
   ---All white wires from rods to the white wire from power source.
   ---Attach the grounding wire to the mounting strap with the green grounding screw. Then connect it to the house grounding wire and all grounding wires from the frame with a wire nut.
   Carefully put the wires back into the outlet box.
10. Attach the canopy to the mounting strap by inserting the coupling, then secure it with the collar.
11. **Angled mounting recommended for a vaulted or angled ceiling. (See Fig. 6~8)**

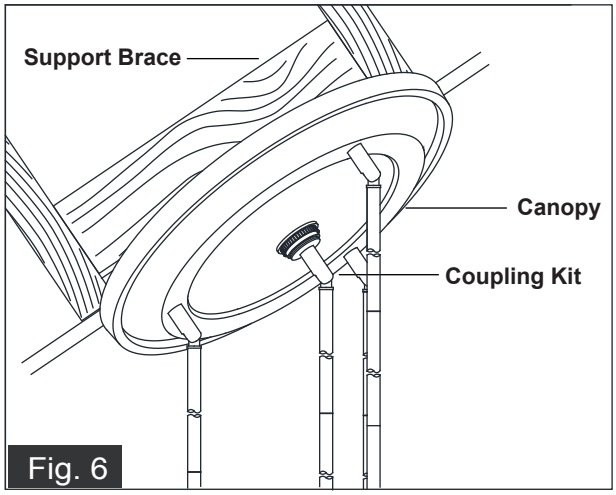

Fig. 6

Fig. 7

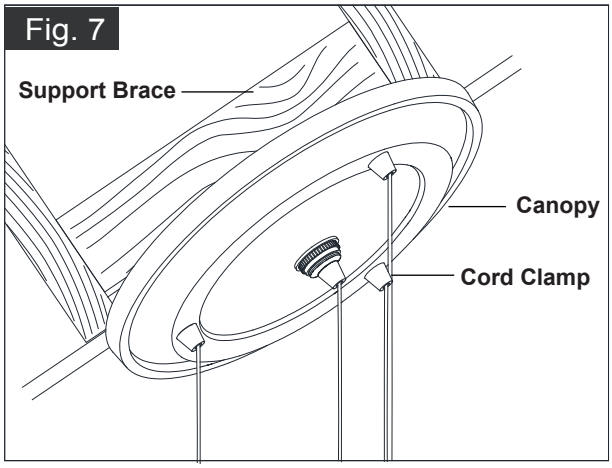

Fig. 8

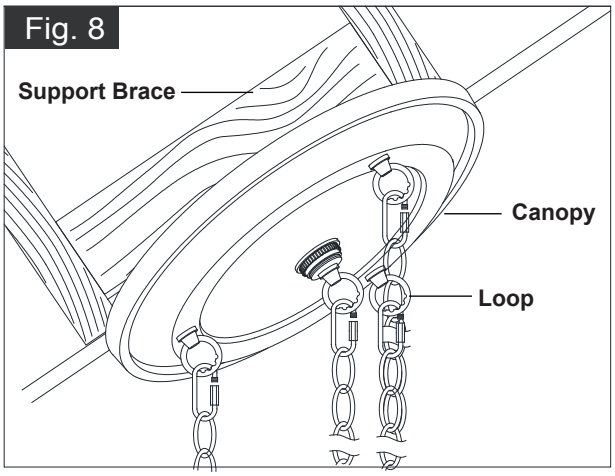

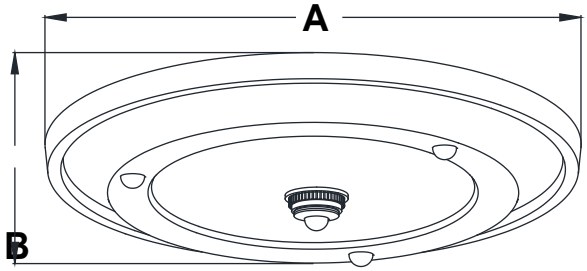

A: 15"

B: 2-3/8"

VAXCEL

130709