WYNDHAM
COLLECTION

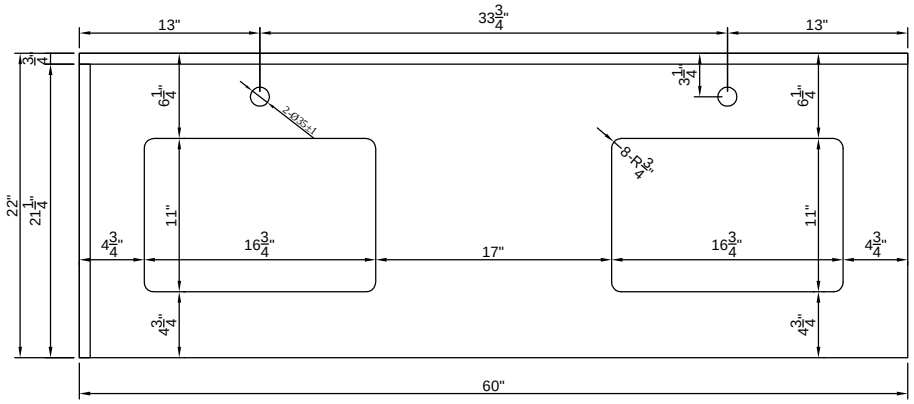


TOP VIEW OF VANITY CABINET

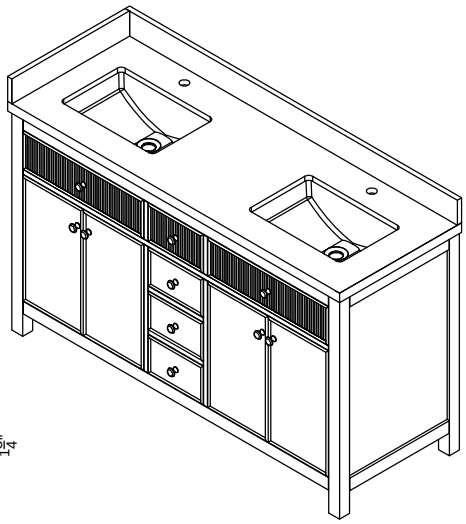

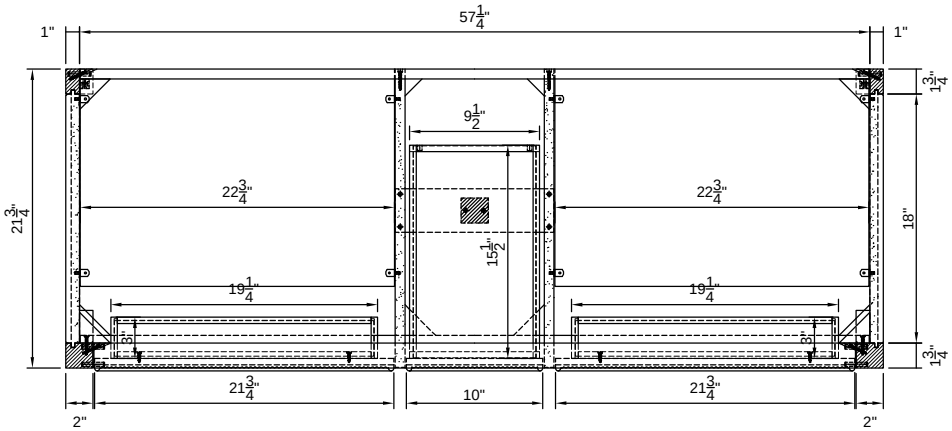


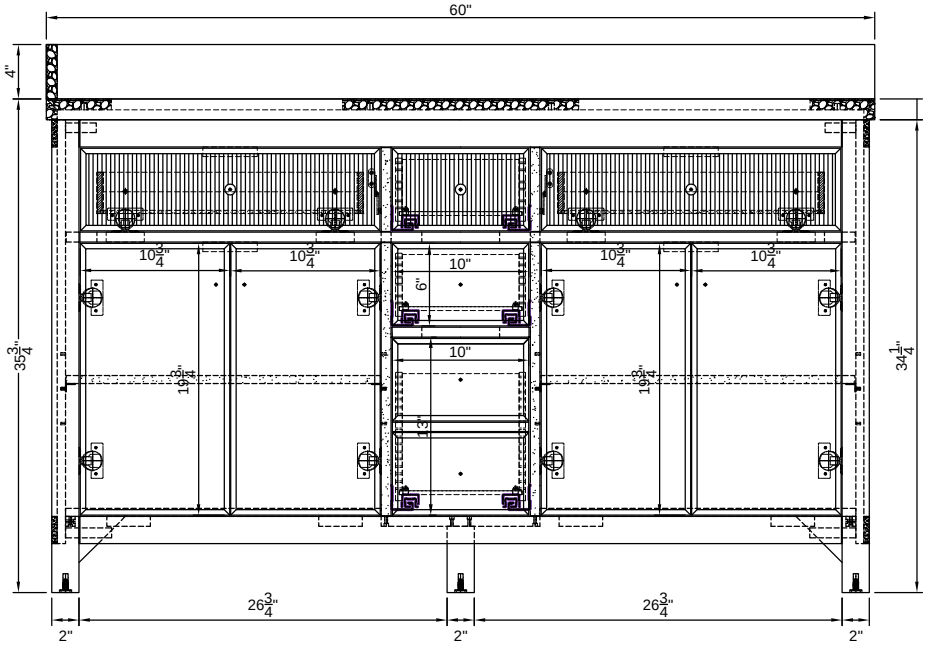


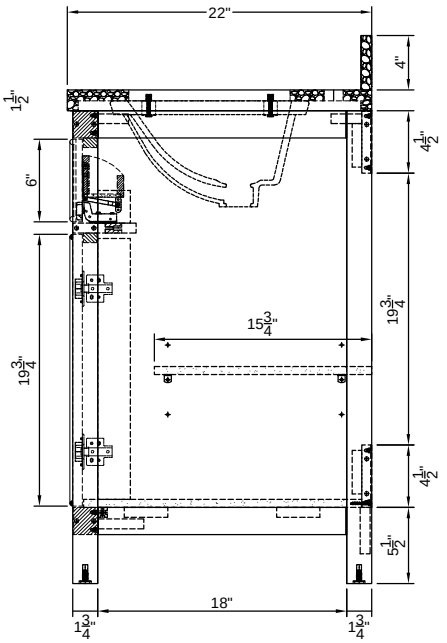


*Note:All measurements are ±1/4"

WC-4848-60DBL