ASSEMBLY AND INSTALLATION INSTRUCTIONS

T0769

WARNING: Turn off the main power at circuit breaker before installing fixture.
AVERTISSEMENT: Coupez la source d'alimentation principale au panneau central de disjoncteurs avant d'installer le luminaire.

NOTE: 1. Before installing, consult local electrical codes for wiring and grounding requirements.
2. Read and save these instructions.

Hardware Package (included):

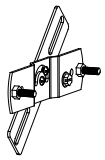
Crossbar Unit (A)


Mounting Screw (B)


Wire Connector (C)


Bolt Nut (D)


Rubber Pad (E)

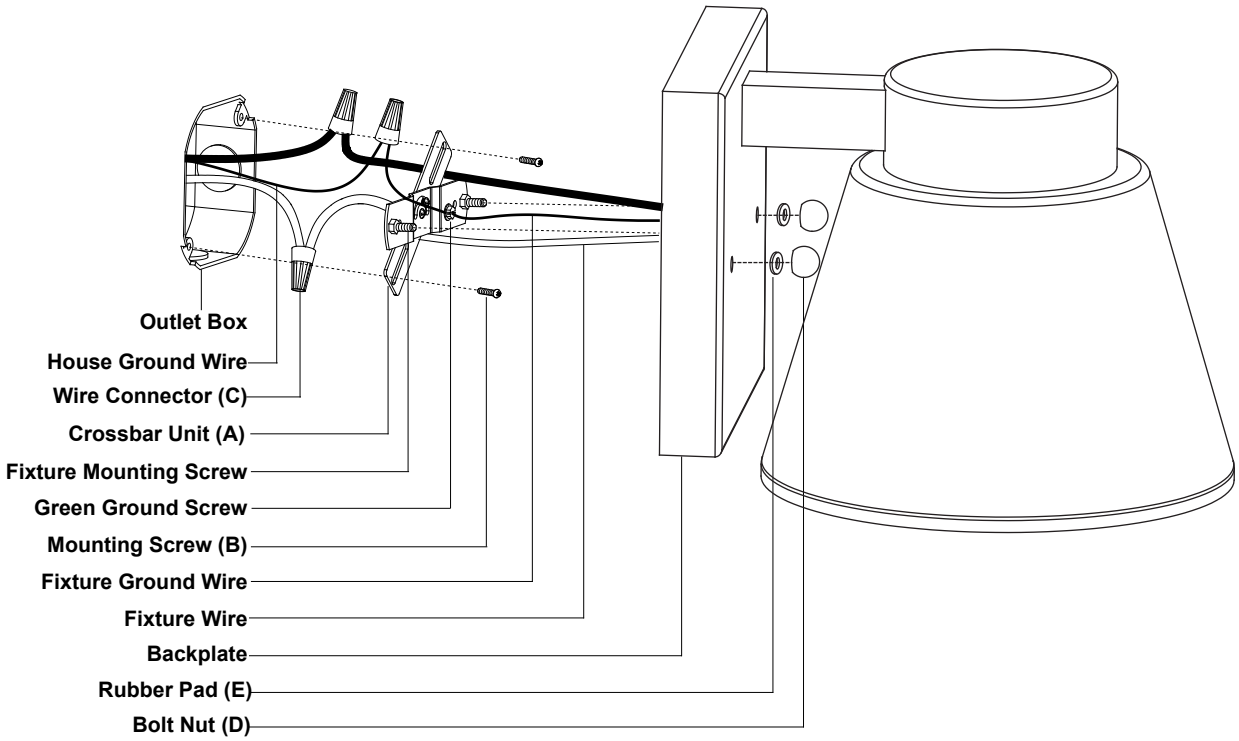

Installation Steps

Turn off the power at fuse or circuit box.

1. Unscrew the two bolt nuts (D), remove the two rubber pads (E) and the crossbar unit (A) from the backplate.

2. Attach the crossbar unit (A) to the outlet box by using two mounting screws (B). Adjust the length of the preinstalled fixture mounting screws if necessary.
Note: Make sure that the fixture mounting screws are lined up horizontally to make the fixture level.

3. Pull out the source wires from the outlet box. Make wire connections using wire connectors (C) as follows:
   - Connect the hot wire (black insulation) from the fixture to the black wire from the power source.
   - Connect the neutral wire (white insulation) from the fixture to the white wire from the power source.
   - Attach the fixture ground wire (bare wire) to the crossbar unit (A) with the green ground screw, then depending on local code, connect it to the house ground wire with the wire connector (C).

   Carefully put all of the wires back into the outlet box.

VAXCEL

240719

3. Attach the backplate of the fixture to the crossbar unit (A) by inserting fixture mounting screws into open holes on the backplate, then secure it with two rubber pads (E) and two bolt nuts (D).
Note: With silicone caulk compound, caulk completely around where the backplate meets with the wall surface to prevent water from seeping into the outlet box.

Turn on the power at fuse or circuit box.

Note: This fixture is dimmable with a forward phase electronic dimmer. Dimmers tested to be compatible with this fixture are the Lutron: TGCL-153PH, MACL-153MH, SCL-153P, DVWCL-153PH.
If you are unfamiliar with electrical installations, it is recommended you have a qualified electrician for your installations.

The following parts are available for re-order if damaged or missing.

Spare Parts List:

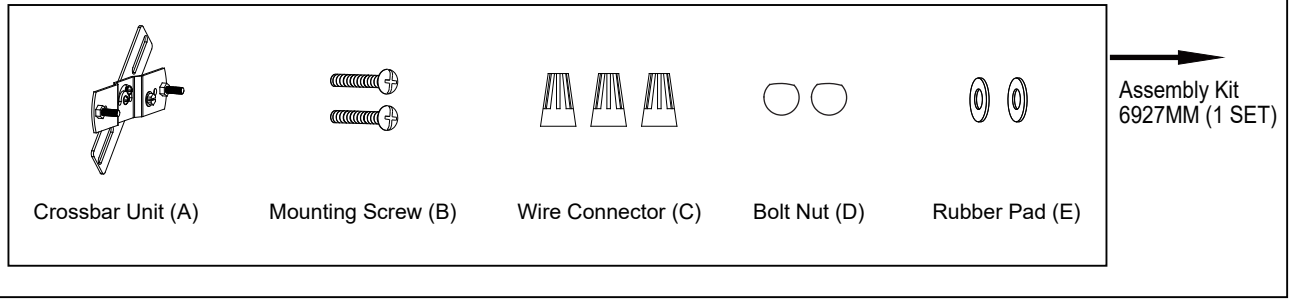

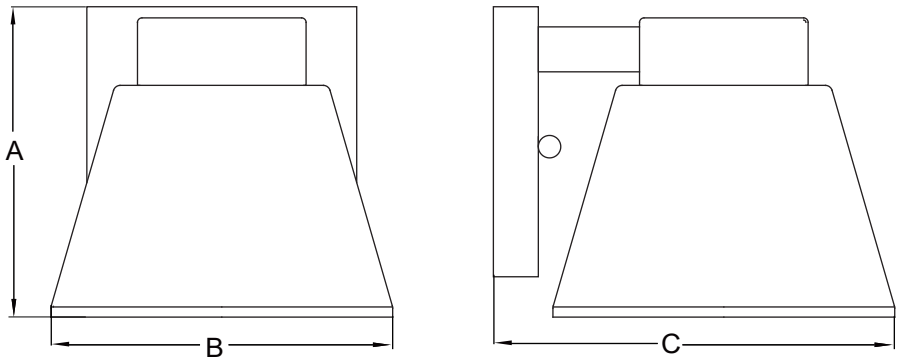

A: 5-1/2"

B: 6"

C: 7"

5 Year Limited Warranty

Vaxcel warrants all of our products against defects in workmanship and finishes for one year following the date of shipment.

In addition:
- Any product with an integrated motion sensor or dusk-to-dawn photocell is supported by a 5-year warranty for the functionality of the product.
- Any product with integrated LED modules is covered by a 5-year warranty on the LED functionality.

Exclusions: This warranty does not include the failure of products from extreme acts of nature; environmental conditions not suited for the products intended use; operation in temperatures outside of the range specified in the instruction manual; usage with improper power supply, power surges or dips. For coastal locations, some corrosion is considered normal for the environment.

Vaxcel reserves the right to repair, replace or issue a credit for any properly installed product, provided it is returned per RMA instruction. This warranty is limited to the cost of the product only and does not extend to transportation, installation or replacement costs.

How can warranty service be obtained?
info@vaxcel.com
1-800-482-9235

VAXCEL
240719