WYNDHAM
COLLECTION

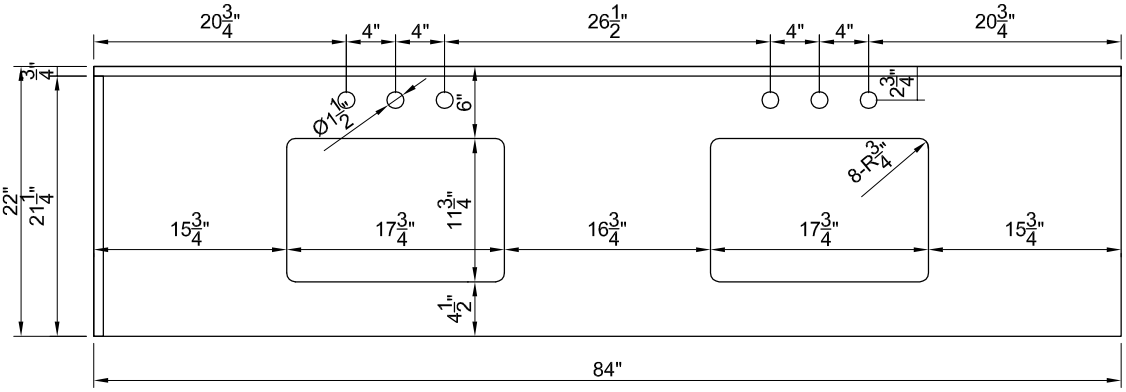

TOP VIEW OF VANITY CABINET

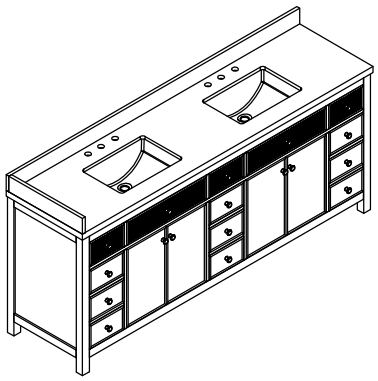

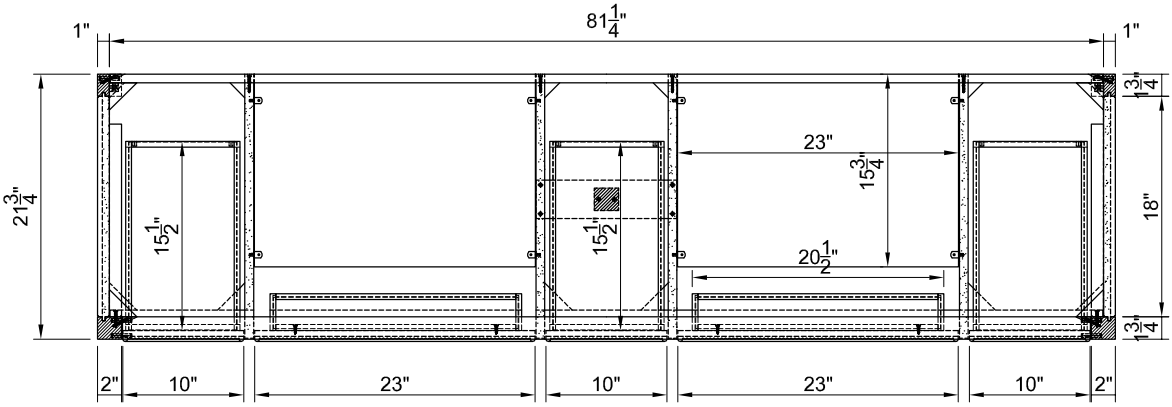

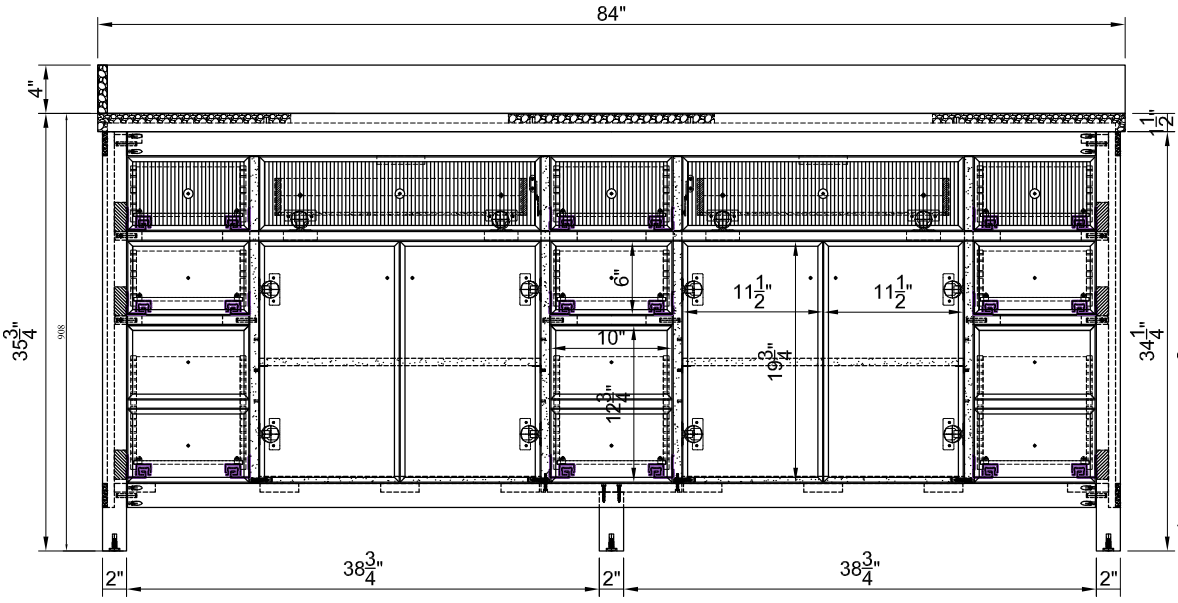

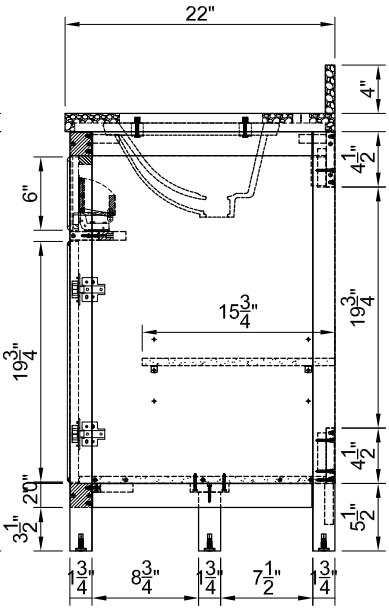

*Note:All measurements are ±1/4"

WC-4848-84DBL

WYNDHAM
COLLECTION

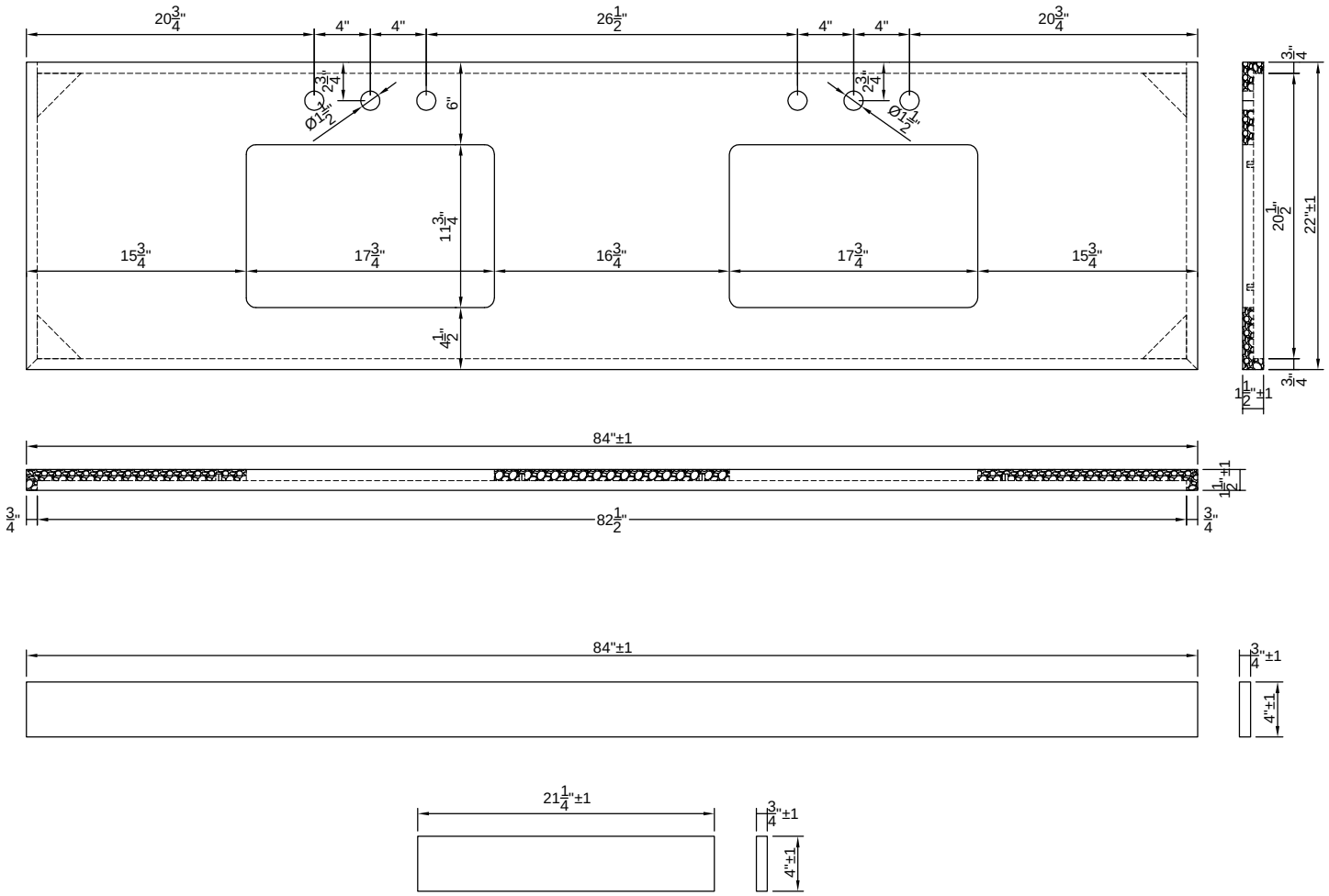

*Note:All measurements are ±1/4"

WC-4Q3-84DBL-TOP-UMSQ