IMS1SWMD

IMS Enabled Momentary Rocker Switch - Decora

Project

Catalog

Type

Date

Product Description

The IMS1SWMD Decora Style SPDT momentary rocker switch [(ON)-OFF-(ON)] that is compatible with the NICOR IMS 2.0 and IMS 3.0 to control fixture on-off and dimming fuctions.

Construction

- Actuator Material: Thermoplastic
- Body Material: Thermoplastic
- Contacts: Silver-Alloy
- Strap Material: Steel
- Terminal Screws: Brass

Electrical

- Amperage: 3A
- Grounding: Self-Grounding
- Voltage: 24VAC/VDC
- Operating Temperature: -40°F to 149°F (-40°C to 65°C)

Listings

- UL94V-2 (Flame Resistance)
- cULus LIsted

Installation

- Installs into standard single gang box

Warranty

- 3-year limited system warranty
- Warranty does not cover product failure due to an overvoltage event (power surge)

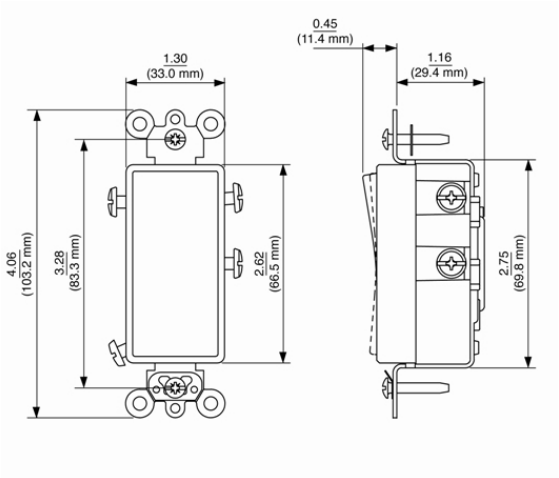

Ordering Information

Series
IMS1SWMD

Specifications and dimensions subject to change without notice.

3 YEAR WARRANTY

NICOR, LLC. 2200 Midtown Place NE, Albuquerque, NM 87107 P: 800.821.6283 F: 800.892.8393
www.nicorlighting.com