RIPLEY QUEEN BED - PANEL, UPHOLSTERED

Thank you for choosing this quality product. Be sure to check all packaging materials carefully for small parts that may have loosened inside the carton during shipment and place on a non-abrasive surface.

IMPORTANT

These parts can be cumbersome and heavy to some people, therefore, the assistance of two or more people are recommended in order to prevent personal injury and ensure the furniture is not damaged during the assembly Process.

CARE INSTRUCTIONS

1. Dust often using a clean, soft, dry and lint-free cloth.
2. Blot spills immediately and wipe with a clean, damp, cloth.
3. We do not recommend the use of chemical cleansers, abrasives or furniture polish on our lacquered finish.

IMPORTANT SAFETY INSTRUCTIONS

1. Please read all instructions carefully before assembling.
2. Keep instructions for future use.
3. Use only vendor supplied hardware to assemble. Using unauthorized hardware could jeopardize the structural integrity of the item.

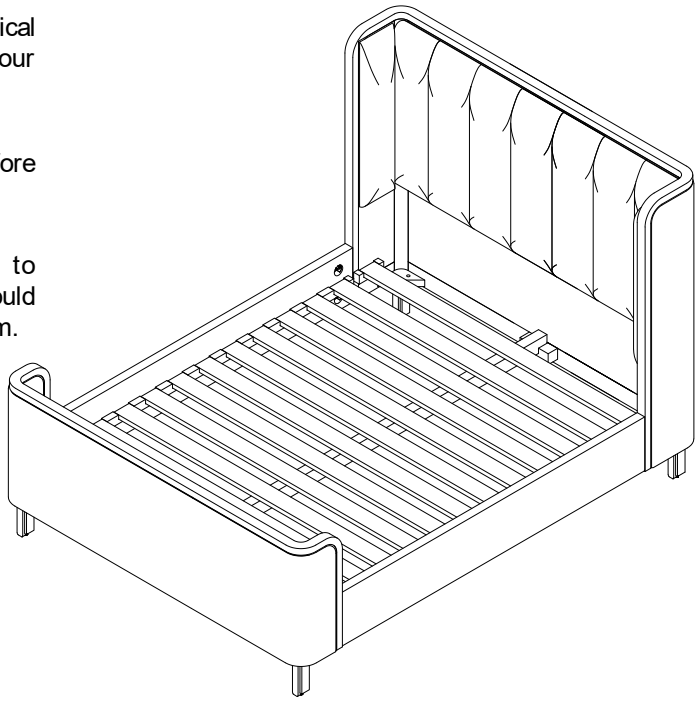

PART LIST

A [1] HEADBOARD

B [2] SIDE RAILS

C [1] FOOTBOARD

D [13] BED SLATS

E [1] SUPPORT SLAT

F [4] FEET

HARDWARE LIST

NO.	DESCRIPTION		QTY
1		THREADED ROD	8 PCS
2		CURVED WASHER	8 PCS
3		LOCK WASHER	8 PCS
4		HEXAGONAL NUT	8 PCS
5		SPANNER WRENCH	1PC
6		ALLEN BOLT	16 PCS
7		ALLEN WRENCH	1PC

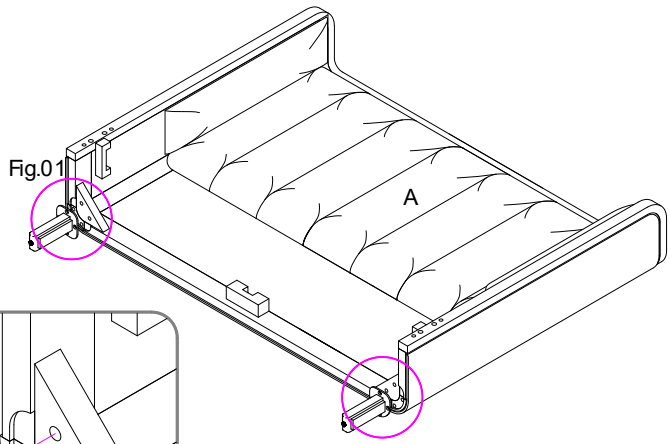

FIGURE 01

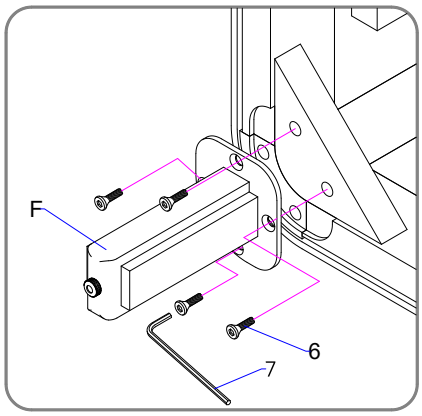

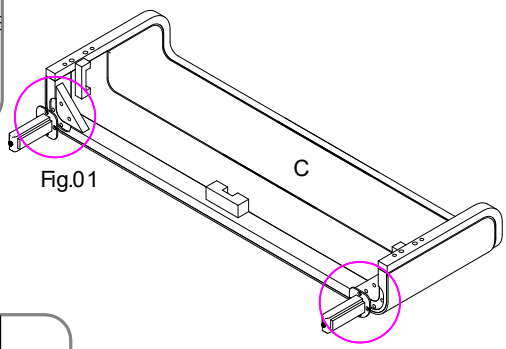

FIGURE 02

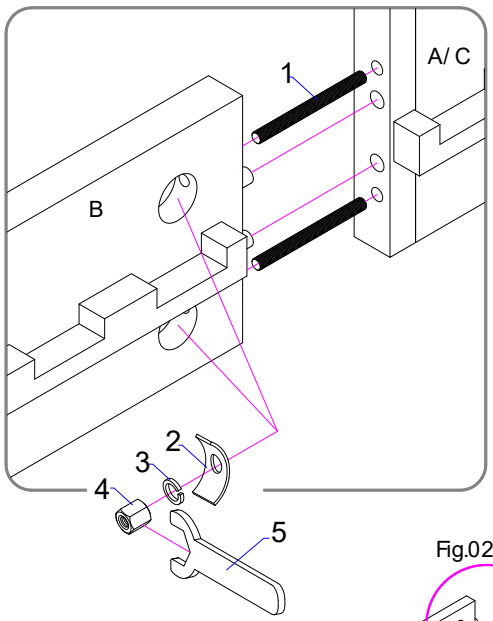

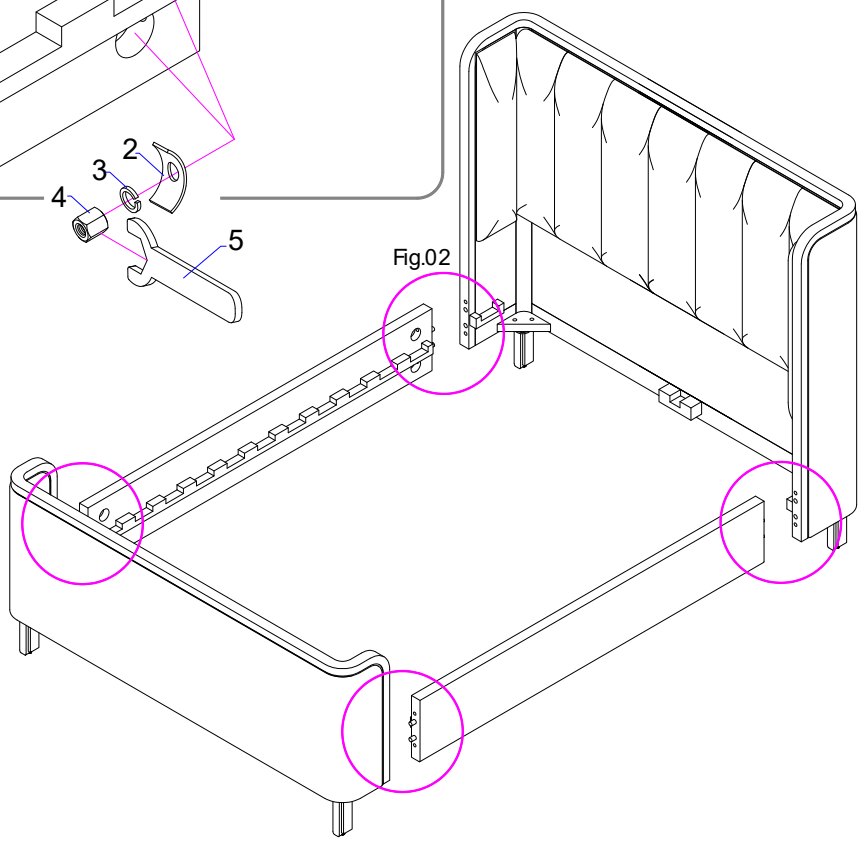

ASSEMBLY INSTRUCTION

The bed is composed of several components: The headboard, foot board, side rails, bed slats, support slats, and feet. Determine the intended location and ensure there is enough space to work with and fully read these instructions before physically doing the entire assembly.

STEP # 1:
Gently, lay the Headboard (A) and Footboard (C) on a flat and non-abrasive surface. Attach the Feet (F) to the bottom of the Headboard and Footboard by using Allen bolts (6) provided. See FIGURE 01.

STEP # 2:
Place the headboard upright in the position you wish the bed to be in when fully assembled. The headboard bed fast hardware should be facing inside, toward the mattress. Secure the threaded rod (1) to the fixed nut in the headboard (A) by simply turning it manually. Raise the side rail (B) up and place the rod (1) to align with the bore holes on the end of the side rails (B). Put the side rails (B) up against the headboard (A) so the threaded rods (1) go through the bore holes. Insert curved washer (2), lock washer (3) and place hex nuts (4) on threaded rod (1) then tighten the hex nuts (4) with wrench (5) provided, as illustrated in **FIGURE 02**.

STEP # 3:
Repeat the above procedure with the other side rail (B) to attach it to the headboard (A), and then repeat to connect side rails (B) to the footboard (C).

FIGURE 03

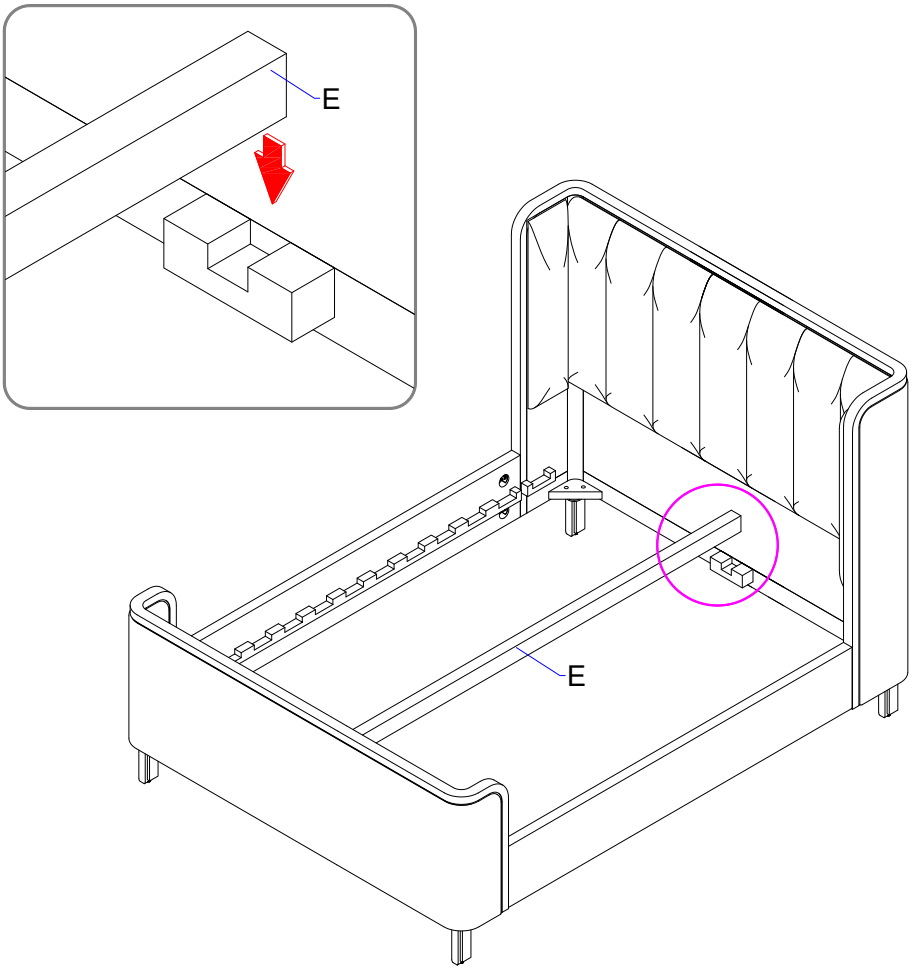

STEP#4:
On inside face of both headboard (A) and footboard (C) are pre-installed metal brackets for the support slat (E). Set the support slat (E) on the metal brackets, as illustrated in **FIGURE 03**.

STEP#5:
On inside surface of both side rails (B) are cavities designed to hold the individual bed slats (D). Set individual bed slats (D) on both cavities of the side rails (B) as illustrated in **FIGURE 04.**

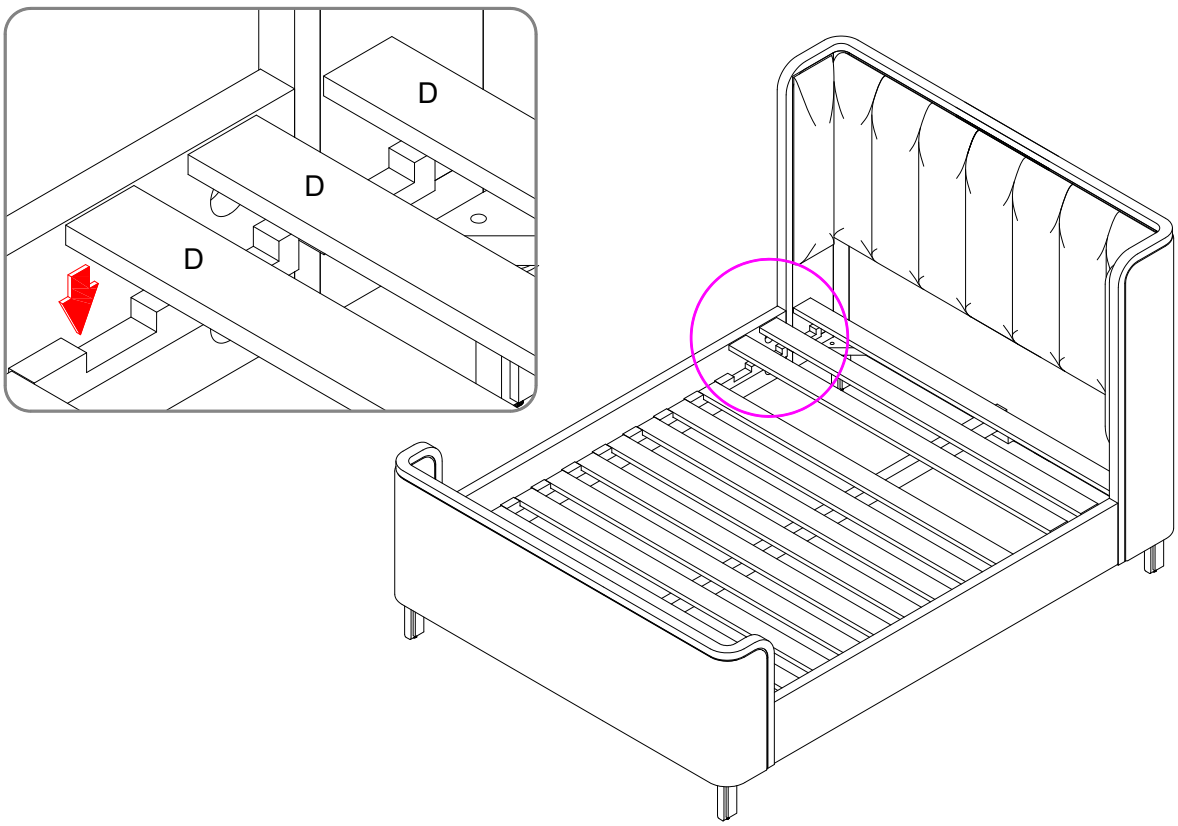

Thank you for your purchase